Interconnection System Impact Study
Final Report

Generator Interconnection Request No. TI-15-0612
30 MW Solar Energy Generating Facility
In Las Animas County, Colorado

Prepared By:

Jeffery L. Ellis of Utility System Efficiencies, Inc.

Reviewed By:

Mark Stout
Tri-State Generation and Transmission Association, Inc.

September 8, 2015

DISCLAIMER OF WARRANTIES AND LIMITATION OF LIABILITY

THIS DOCUMENT WAS PREPARED FOR TRI-STATE GENERATION AND TRANSMISSION ASSOCIATION, INC., IN ITS CAPACITY AS TRANSMISSION PROVIDER (TP), IN RESPONSE TO A LARGE GENERATOR INTERCONNECTION REQUEST. NEITHER TP, NOR ANY PERSON ACTING ON BEHALF OF TP: (A) MAKES ANY REPRESENTATION OR WARRANTY, EXPRESS OR IMPLIED, WITH RESPECT TO THE USE OF ANY INFORMATION, METHOD, PROCESS, CONCLUSION, OR RESULT INCLUDING FITNESS FOR A PARTICULAR PURPOSE; OR (B) ASSUMES RESPONSIBILITY FOR ANY DAMAGES OR OTHER LIABILITY, INCLUDING ANY CONSEQUENTIAL DAMAGES, RESULTING FROM USE OF THIS DOCUMENT OR ANY INFORMATION CONTAINED HEREIN.

TABLE OF CONTENTS

Page No.

1.0 EXECUTIVE SUMMARY 3

2.0 BACKGROUND AND SCOPE 5

3.0 GF MODELING DATA 6

4.0 STEADY-STATE POWER FLOW ANALYSIS 7
- 4.1 Criteria and Assumptions 7
- 4.2. Voltage Regulation and Reactive Power Criteria 8
- 4.3 Steady State Power Flow Results 9

5.0 DYNAMIC STABILITY ANALYSIS 11
- 5.1 Criteria and Assumptions 11
- 5.2 Base Case Model Assumptions 13
- 5.3 Methodology 13
- 5.4 Results 14

6.0 SHORT-CIRCUIT ANALYSIS 15
- 6.1 Assumptions and Methodology 15
- 6.2 Results 15

7.0 SCOPE, COST AND SCHEDULE 18

***NOTE: Appendices are Tri-State Confidential, are available only to the IC and Affected Systems upon request, and are not for posting on OASIS*.**

Appendix A: Steady State Power Flow Study – List of N-1 Contingencies

Appendix B: Steady State Power Flow Study – Plots

Appendix C: Dynamic Stability Study – Switching Sequences

Appendix D: Dynamic Stability Study – Waveform Plots

Appendix E: Generation Dispatch Summary Listing (BAs 10, 70, 73)

1.0 EXECUTIVE SUMMARY

This System Impact Study was prepared for Generator Interconnection Request No. TI-15-0612, a proposed 30 MW solar energy generating facility located in Las Animas County, Colorado. The study was conducted for the Transmission Provider, Tri-State Generation and Transmission Association, Inc., (Tri-State), in accordance with its Generator Interconnection Procedures, and incudes steady-state power flow, dynamic stability, short-circuit, cost and schedule analyses for interconnection of the project as a Network Resource.

Cost and schedule estimates are as provided by Tri-State and are good faith estimates only (typically +/-30% accuracy). Higher accuracy will be provided as part of an Interconnection Facilities Study.

For purposes of this study, twelve (12) SMA SC2500 inverters and one 34.5-115 kV transformer were modeled at the main solar energy generating facility. The primary Point of Interconnection (POI) is assumed to be approximately seven miles east of the Ludlow Tap (load side). The project will tap the Ludlow Tap to Pinon Canyon 115 kV line (see Figure 1 for reference).

Steady-state power flow results:

Single contingency analysis was completed using 2017 heavy summer and light spring load and dispatch conditions with the planned project. With the generating facility at its full 30 MW injection there were no transmission elements that exceeded emergency thermal limits as a result of the project generation. No voltage violations were observed.

Reactive power / voltage regulation:

The project can meet Tri-State's 0.95 p.f. lag to lead criteria at the POI with exception of output levels near 0 MW, and when absorbing reactive power at output levels around 15 MW. Therefore, supplemental reactive power equipment (or inverter capability) of approximately 5 to 6 MVAR will be required to offset the collector system VARs and meet Tri-State's VAR neutral criteria (less than 2 MVAR flow at near 0 MW output at the POI). Table 5 tabulates reactive requirements for the project.

Dynamic stability analyses:

Transient stability analysis was completed with the SMA SC2500 2500 kVA Inverter dynamic model. The project at the 30 MW generation level did not trip during any of the simulated disturbances with acceptable voltage levels for the SMA inverters. Local area generators showed stable performance and remained in synchronism for all contingencies. Acceptable damping and voltage recovery was observed. (Appendix D).

Short - Circuit analyses:

Results indicate that the project increases the fault duty by approximately 285 amperes at the 115 kV POI bus. The resultant total fault currents are within Tri-State's planned equipment ratings.

The estimated cost for interconnecting the proposed project is $1.55 M (2016 dollars) (refer to Section 7.0 of this report). The in-service date will depend on construction of the interconnection facilities and will be approximately 12 months after execution of a Generator Interconnection Agreement (GIA) or Engineering and Procurement contract.

NOTE: Pursuant to Section 3.2.2.4 of Tri-State's Generator Interconnection Procedures, "Interconnection Service does not convey the right to deliver electricity to any customer or point of delivery. In order for an Interconnection Customer to obtain the right to deliver or inject energy beyond the Generating Facility Point of Interconnection or to improve its ability to do so, transmission service must be obtained pursuant to the provisions of Transmission Provider's Tariff by either Interconnection Customer or the purchaser(s) of the output of the Generating facility." See Tri-State's Open Access Same Time Information System (OASIS) web site for information regarding requests for transmission service, related requirements and contact information.

2.0 BACKGROUND AND SCOPE

On June 17, 2015, the Interconnecting Customer submitted a Generator Interconnection Request for a 30 MW solar energy generating facility to be connected to the existing Ludlow to Pinon Canyon 115 kV transmission line. The application was deemed complete on June 29, 2015. The model data used in this study is that which was provided by the Customer in its Generator Interconnection Request.

This System Impact Study was prepared in accordance with Tri-State's Generator Interconnection Procedures and relevant FERC, NERC, WECC and Tri-State guidelines. The objectives are: 1) to evaluate the steady state performance of the system with the proposed project, 2) identify all Interconnection Facilities and Network Upgrades, 3) check the project's ability to meet Tri-State's voltage regulation and reactive power criteria, 4) assess the dynamic performance of the transmission system under specified stability contingencies, 5) perform a basic short circuit analysis to provide the estimated maximum (N-0) and minimum (N-1) short circuit currents, and 6) provide a preliminary estimate of the costs and schedule for all necessary Interconnection Facilities and Network Upgrades, subject to refinement in a Facilities Study.

Figure 1 - Study Area And Location of Proposed Project

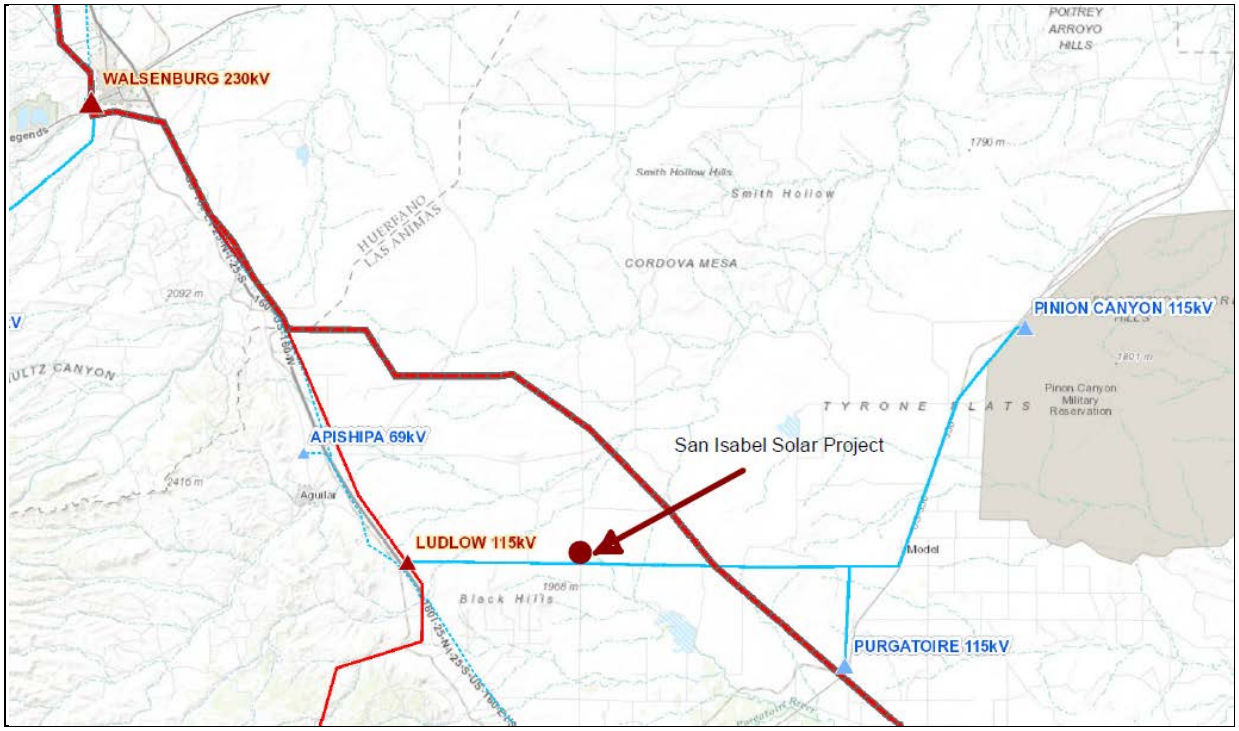

3.0 GF MODELING DATA

The project consists of a 30 MW equivalent solar generator with one 34.5-115 kV transformer. The project connects to the Ludlow Tap - Pinon Canyon 115 kV line approximately seven (7) miles on the load side of the Ludlow Tap. See Figures 1 and 3 for further details. Model data is based upon information provided by the Customer. The Customer must provide actual data and confirm actual reactive power operating capabilities prior to interconnecting the project, and ultimately prior to being deemed by Tri-State as suitable for commercial operation.

Generator Data: The study modeled an equivalent generator with a Pmax of 30 MW and reactive capability of 0.90 lag and 0.90 lead, 14.53 and -14.53 MVAr, respectively.

Table 1: Generator Data for Steady-State Power Flow Analyses

Unit	Description	
Pmax	Name plate rating (lumped equivalent gen model)	30 MW
Qmin, Qmax	Reactive capability	0.90 lag to 0.90 lead
Et	Terminal voltage	0.55 kV
RSORCE	Synchronous resistance	0.0000 p.u.
XSORCE	Synchronous reactance	9999 p.u.

Table 2: Power Flow Data for Individual Generating Units

Unit	Description	[*Manufacturer*]
MBase	Generator MVA base	2.7 MVA
Prated	Generator active power rating	2.5 MW
Pmin	Minimum generation	0.2 MW
Vrated	Terminal voltage	0.55 kV
Srated	Unit transformer Rating	2.25 MVA
Xt	Unit Transformer Reactance (on transformer base)	6.0%
Xt/Rt	Unit Transformer X/R ratio	7.3

Table 3: Voltage Ride-Through Thresholds And Durations

V (%) at HV POI Bus	Delta V (p.u.)	Time (sec)
80	-0.20	2.0
20	-0.80	0.3
120	0.20	0.10

34.5 kV Collector System: The medium voltage collector system was modeled with typical collector system equivalent impedances based on the WECC Guide. The solar project was interconnected to the POI via one 34.5-115 kV transformer and an equivalent feeder circuit.

Main Generating Facility Substation Transformer: The substation transformer was modeled with ratings of 18/24/30 MVA and a voltage ratio of 34.5 kV (wye-gnd) - 115 kV (wye-gnd). The transformer impedance was assumed to be 10% on the 18 MVA base FA rating with X/R of 21.

4.0 STEADY-STATE POWER FLOW ANALYSIS

4.1 Criteria and Assumptions

Siemens-PTI PSS/E version 33.5.0 software was used for performing the steady-state power flow analysis, with the following study criteria:

1. Tri-State's GIP 2017 Heavy Summer and Light Spring (PSS/E-v33) base cases were developed from WECC approved seed cases with updates from the latest available loads and resources data, topology (line and transformer ratings, planned and budgeted projects, etc.), and updates received from regional utilities and Affected Systems. The following base cases were utilized:
    a. 2017 Heavy Summer cases with and without the proposed project
    b. 2017 Light Spring cases with and without the proposed project
2. The output from TI-15-0612 was accommodated by displacing Tri-State generation resources at Craig (applicable as if this project were a Network Resource, but with results similar to a Non-Network Resource).
3. The generating facility was modeled according to data provided by the Customer. The project was adequately represented both for assessing power flow and dynamic performance.
4. Power flow (N-0) solution parameters were as follows: Transformer LTC Taps – stepping; Area Interchange Control – tie lines and loads; Phase Shifters and DC Taps – adjusting; and Switched Shunts - enabled.
5. Power flow contingencies (N-1) utilized the following solution settings: Transformer LTC Taps – locked taps; Area Interchange Control – disabled; Phase Shifters and DC Taps – non-adjusting; and Switched Shunts – locked all. (Not allowing these voltage regulating solution parameters to adjust provides worst case results.)
6. All buses, lines and transformers with nominal voltages greater than or equal to 69 kV in the Tri-State and surrounding areas were monitored in all study cases for N-0 and N-1 system conditions.
7. All three of the nearby study areas (PNM, Tri-State, and XCEL/PSCo) were investigated using the same overload criteria. Any thermal loading greater than 95% of the branch rating with a thermal overload increase of 2% or more was documented.
8. Analysis assumes that the generating facility controls the high voltage bus at the POI and should not negatively impact any controlled voltage buses on the transmission system.

9. Post-contingency power transfer capability is subject to voltage constraints as well as equipment ratings. The project was tested against NERC/WECC reliability criteria and additions/exceptions are as listed in the following Table 4.

Table 4 - Voltage Criteria

Tri - State Voltage Criteria for Steady State Power Flow Analysis			
Conditions	**Operating Voltages**	**Delta-V**	**Areas**
Normal N-0	0.95 - 1.05		All
Contingency N-1	0.90 - 1.10	7%	Northeastern New Mexico
Contingency N-1	0.90 - 1.10	7%	Southern New Mexico
Contingency N-1	0.90 - 1.10	6%	Other buses in PNM area
Contingency N-1	0.90 - 1.10	7%	Western Colorado
Contingency N-1	0.90 - 1.10	7%	Southern Colorado
Contingency N-1	0.90 - 1.10	6%	Other Tri-State areas

4.2. Voltage Regulation and Reactive Power Criteria

1. The generating facility (GF) must be capable of either producing or absorbing VARs as measured at the high voltage POI bus at a 0.95 power factor (p.f.), across the range of near 0% to 100% of facility MW rating, as calculated on the basis of nominal POI voltage (1.0 per unit).
2. The GF may be required to produce VARs from 0.90 p.u. V to 1.04 p.u. V at the POI. In this range the GF helps to support or raise the POI bus voltage.
3. The GF may be required to absorb VARs from 1.02 p.u. V to 1.10 p.u. V at the POI. In this range the GF helps to reduce the POI bus voltage.
4. The GF may be required to either produce VARs or absorb VARs from 1.02 p.u. V to 1.04 p.u. V at the POI, with typical target regulating voltage being 1.03 p.u. V.
5. It is assumed that the GF will supply a portion of the VAR requirement by dynamic control of the inverters. The amount of dynamically adjustable VAR shall be equivalent to a minimum of 0.95 p.f. produced or absorbed at the invertor collector system medium voltage bus, across the near full range (0 to 100%) of rated MW output. The remaining VARs required to meet the 0.95 p.f. net criteria at the high voltage POI bus may be achieved with switched reactive devices.

   The GF may utilize switched capacitors or reactors as long as the individual step size results in a step-change voltage of less than 3% at the POI operating bus voltage. This step change voltage magnitude shall be calculated based on the minimum system (N-1) short circuit POI bus MVA level as supplied by Tri-State.
6. When the GF is not producing any real power (near 0 MW), the VAR exchange at the POI should be near 0 MVAR, i.e., VAR neutral.

4.3 Steady State Power Flow Results

1. N-0 (System Intact, Category A) Study Results:

   The proposed project generation (30 MW) can be added with no thermal or voltage violations with all lines in-service.

2. N-1 (Single Contingency, Category B) Study Results:

   With the 2017 Heavy Summer case, and with the GF at full 30 MW output, there were no transmission elements that exceeded emergency thermal limits as a result of the project generation. No voltage violations were identified.

   With the 2017 Light Spring case, and with the GF at full 30 MW output, there were no transmission elements that exceeded emergency thermal limits as a result of the project generation. No voltage violations were identified.

3. Steady-state voltage violations: With an operating voltage range between 0.90 p.u. to 1.10 p.u. for single contingency outage conditions, there were no voltage violations with the GF at full output.

4. Steady-state contingency voltage deviation:

   Each Balancing Authority Area's ΔV requirement was applied as per Table 4. There were no ΔV violations at any of the monitored buses.

5. Reactive power required at the POI:

   At full 30 MW output, the VAR capability required at the POI ranges from 9.6 MVAR produced (0.95 p.f. lag) to 9.6 MVAR absorbed (0.95 p.f. lead). This is the net MVAR to be produced or absorbed by the GF, depending upon the applicable range of voltage conditions at the POI.

   The unit data provided by the Customer shows a reactive capability of +/- 0.9 power factor. Utilizing only the GF capability supplied by the Customer, a steady-state analysis was performed for the POI voltage established by the dispatch in the power flow cases. For reference, Table 5 shows the net VAR flow at several levels of GF output and at fixed generator bus p.f. levels, based on the voltage at the lumped equivalent model generator terminals and the voltage at the POI bus.

   The results show that this GF can meet Tri-State's 0.95 p.f. lag to lead criteria at the POI with exception of the GF absorbing power around 15 MW, and at output levels near 0 MW. Therefore, supplemental reactive power equipment (or inverter capability) of approximately 5 to 6 MVAR will be required to offset the collector system VARs and meet Tri-State's VAR neutral criteria (less than 2 MVAR flow at near 0 MW output at the POI).

   The Interconnecting Customer is responsible for installing equipment to ensure that the GF can achieve the net 0.95 p.f. lag and lead capability across the 0 to 30 MW net generation output rating as measured at the POI. Prior to entering into a Generator Interconnection Agreement, the Customer must provide data that demonstrates compliance with Tri-State's reactive criteria.

Table 5: Reactive Power Delivered to the Inverter Bus and at POI Bus
Project Size: 30 MW, SMA SC2500 2.5MW each, 12 Units

Base Case	Fixed P.F. at MV Gen Equiv Collector Bus	P, Q, V At Gen Equiv MV			Net P, Q, V, PF At HV POI Bus					
		Pgen (MW)	Qgen (MVAR)	Voltage (p.u.)	P (MW)	Q (MVAR)	PF at POI	Voltage (p.u.)	MVAR to meet PF of 0.95 at POI	MVAR Short(+) or Excess(-)
HS Base Case – 0.90 p.f. lag (producing MVAR)										
	0.9	0	0.0	0.981	0	5.2	0	0.95	0	-5.2
	0.9	7.5	3.6	1.012	7.4	8.3	0.665	0.95	2.4	-5.9
	0.9	15	7.3	1.04	14.8	10.5	0.816	0.95	4.9	-5.6
	0.9	22.5	10.9	1.063	22.1	11.8	0.882	0.95	7.3	-4.5
	0.9	30	14.5	1.083	29.3	12.2	0.923	0.95	9.6	-2.6
LA Base Case – 0.90 p.f. lead (absorbing MVAR)										
	-0.9	0	0	1.084	0	6.4	0	1.05	0	-6.4
	-0.9	7.5	-3.6	1.113	7.4	-9.5	0.615	1.05	-2.4	-7.1
	-0.9	15	-7.3	1.03	14.8	-3	0.980	1.05	-4.9	1.9
	-0.9	22.5	-10.9	0.995	22.1	-9.5	0.919	1.05	-7.3	-2.2
	-0.9	30	-14.5	0.95	29.3	-17.9	0.853	1.05	-9.6	-8.3

5.0 DYNAMIC STABILITY ANALYSIS

5.1 Criteria and Assumptions

5.1.1 NERC/WECC Dynamic Criteria

PSSE version 33.5.0 was used for dynamic stability analysis. Dynamic stability analysis was performed in accordance with the dynamic performance criteria shown in Table W-1 and Figure W-1 from the NERC and WECC TPL-001 through 004 System Performance Criteria. These criteria are shown below.

WECC DISTURBANCE-PERFORMANCE TABLE OF ALLOWABLE EFFECTS ON OTHER SYSTEMS

NERC and WECC Categories	Outage Frequency Associated with the Performance Category (outage/year)	Transient Voltage Dip Standard	Minimum Transient Frequency Standard	Post Transient Voltage Deviation Standard (See Note 2)
A	Not Applicable	Nothing in addition to NERC		
B	≥ 0.33	Not to exceed **25%** at load buses or **30%** at non-load buses. Not to exceed **20% for more than 20 cycles** at load buses.	Not below **59.6** Hz for 6 cycles or more at a load bus.	Not to exceed **5%** at any bus.
C	0.033 – 0.33	Not to exceed **30%** at any bus. Not to exceed **20% for more than 40 cycles** at load buses.	Not below **59.0** Hz for 6 cycles or more at a load bus.	Not to exceed **10%** at any bus.
D	< 0.033	Nothing in addition to NERC		

Table W-1: NERC/WECC Planning Standards, April 2003

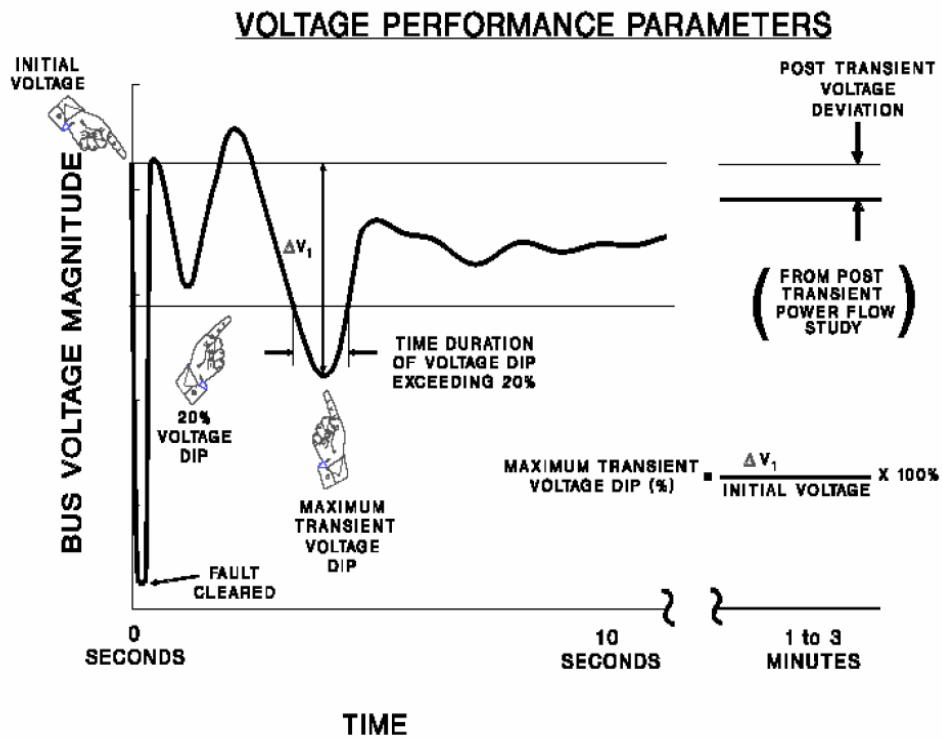

Figure W-1: NERC/WECC Planning Standards, April 2003

In addition, the NERC/WECC standard states that "[r]elay action, fault clearing time, and reclosing practice should be represented in simulations according to the planning and operation of the actual or planned systems. When simulating post transient conditions, actions are limited to automatic devices and no manual action is to be assumed."

5.1.2 Voltage Ride-Through Requirements

1. The GF shall be able to meet the dynamic response low voltage ride through (LVRT) requirements consistent with the latest WECC / NERC criteria, as stated in Tri-State's Generation Interconnection Procedures Appendix G and FERC Order 661a for LVRT.

2. Generating plants are required to remain in service during faults (three-phase or single line-to-ground (SLG) whichever is worse) with normal clearing times of approximately 4 to 9 cycles or SLG faults with delayed clearing, and subsequent post-fault voltage recovery to pre-fault voltage unless clearing the fault effectively disconnects the generator from the system. The clearing time requirement for a three-phase fault will be specific to the circuit breaker clearing times of the affected system to which the Customer facilities are interconnecting. The maximum clearing time the PV inverter generating plant shall be required to withstand for a fault shall be 9 cycles. After which, if the fault remains following

the location-specific normal clearing time for faults, the PV generating plant may disconnect from the transmission system. A PV generating plant shall remain interconnected during such a fault on the transmission system for a voltage level as low as zero volts as measured at the POI. The Customer may not disable LVRT equipment while the plant is in-service.

3. This requirement does not apply to faults that may occur between the PV inverter generator terminals and the POI.
4. PV generating plants may meet the LVRT requirements by the performance of the generators or by installing additional equipment, e.g., Static VAR Compensator, or by a combination of generator performance and additional equipment.

5.2 Base Case Model Assumptions

1. Transient stability analysis was completed with the SMA SC2500 2,500 kVA Inverter modeled with 30 MW output.
2. The collector system was modeled with an equivalent collector system and one 115/34.5 kV substation transformer.
3. The load at the Rosebud 13.8 kV bus (12063) in northeast New Mexico was load netted for this analysis to yield stable system conditions during faults. Transmission system upgrades are planned for the northeast New Mexico area to address potential voltage instability. The instability is not related to this Project.
4. Since models for the Comanche Solar Project were not available, WTG4 models were used for this project with proxy data.

5.3 Methodology

Dynamic stability was evaluated as follows:

1. The 2017 Heavy Summer and Light Spring base cases were utilized with the GF in service.
2. System stability was observed by monitoring the voltage, frequency and relative rotor angles of local machines and system damping.
3. Three-phase faults were simulated for all contingencies. Two contingencies were simulated for each line: a fault was applied at the near end and then applied at the far end of the transmission line. Contingencies to evaluate compliance with NERC/WECC criteria for dynamic stability are listed in the following table.

Table 6: List of Dynamic Stability Contingencies

Dynamic Stability Contingencies		
No.	Description	Bus Numbers
1	4-cycle 3-phase fault at POI 15-0612 115 kV, trip Walsenburg - POI 15-0612 115 kV line	70458-73800
2	4-cycle 3-phase fault at Stem Beach 115 kV, trip Stem Beach - Pueblo TP - W.Station 115 kV line	70412-70456
3	4-cycle 3-phase fault at Stem Beach 115 kV, trip Stem Beach - Walsenburg 115 kV line	70412-70458
4	4-cycle 3-phase fault at Walsenburg 115 kV, trip Walsenburg 230/115 kV No.1 transformer	70459-70458
5	4-cycle 3-phase fault at Midway BR 230 kV, trip Midway BR - W.Canon 230 kV line	73413-73551
6	4-cycle 3-phase fault at Comanche 230 kV, trip Comanche - Midway PS 230 kV No.1 line	70122-70286
7	4-cycle 3-phase fault at Comanche 230 kV, trip Comanche - Walsenburg 230 kV line	70122-70459
8	4-cycle 3-phase fault at Comanche 345 kV, trip Comanche - Boone 230 kV line	70122-70061
9	4-cycle 3-phase fault at Comanche 345 kV, trip Comanche - Daniel Park 345 kV No.1 line	70654-70601
	NERC/WECC Category C Contingency	
10	4-cycle 3-phase fault at Midway PS 230 kV bus, trip Midway PS - Midway BR 230 kV line	70286-73413

5.4 Results

Transient stability results identified that the project does not require additional mitigation and is compliant with the NERC/WECC criteria for the SMA inverters. Simulation results for both summer and spring show that:

1. With the SMA Photovoltaic Inverters (30 MW), the project did not trip during any contingencies and had acceptable voltage levels. In addition, the GF was able to operate at full capacity.
2. Local area generators showed stable performance and remained in synchronism for all contingencies.
3. Acceptable damping and voltage recovery was observed.

Table 7: Dynamic Stability Results - 2017 Heavy Summer and Light Spring

Dynamic Stability Contingencies		2017 Heavy Summer/Light Spring
No.	Description	
1	4-cycle 3-phase fault at POI 15-0612 115 kV, trip Walsenburg - POI 15-0612 115 kV line	Stable
2	4-cycle 3-phase fault at Stem Beach 115 kV, trip Stem Beach - Pueblo TP - W.Station 115 kV line	Stable
3	4-cycle 3-phase fault at Stem Beach 115 kV, trip Stem Beach - Walsenburg 115 kV line	Stable
4	4-cycle 3-phase fault at Walsenburg 115 kV, trip Walsenburg 230/115 kV No.1 transformer	Stable
5	4-cycle 3-phase fault at Midway BR 230 kV, trip Midway BR - W.Canon 230 kV line	Stable
6	4-cycle 3-phase fault at Comanche 230 kV, trip Comanche - Midway PS 230 kV No.1 line	Stable
7	4-cycle 3-phase fault at Comanche 230 kV, trip Comanche - Walsenburg 230 kV line	Stable
8	4-cycle 3-phase fault at Comanche 345 kV, trip Comanche - Boone 230 kV line	Stable
9	4-cycle 3-phase fault at Comanche 345 kV, trip Comanche - Daniel Park 345 kV No.1 line	Stable
	NERC/WECC Category C Contingency	
10	4-cycle 3-phase fault at Midway PS 230 kV bus, trip Midway PS - Midway BR 230 kV line	Stable

6.0 SHORT-CIRCUIT ANALYSIS

6.1 Assumptions and Methodology

Short-circuit analysis was performed for 3-phase-to-ground and single-line-to-ground faults at the 115 kV POI bus, using the Aspen OneLiner model. Faults were applied with and without the generation project. Model assumptions are as follows.

A. The model used is shown in Figure 2 below.

B. The GF's 115-34.5 kV main substation transformer, as submitted in its Generator Interconnection Request, is Wye-gnd / Wye-gnd with a delta tertiary. The positive and zero sequence impedances were provided as 10% with an X/R ratio of 21.

C. Typical positive sequence impedances were used for the 34.5 kV GF collector system lumped equivalent feeder circuits. The zero sequence impedance was assumed to be 3 times the positive sequence impedance.

D. The invertor short-circuit impedances were provided as 0.000 + 0.2j per unit on a 2.5 equivalent invertor MVA base.

E. The 12 GF generator step-up transformers were assumed to have Z1=6%, Z0=6% on 2.25 MVA base.

6.2 Results

Tables 8 lists results for the 115 kV bus faults, contributions from each of the 115 kV sources into the bus faults, and the network grid Thevenin equivalent impedances (see Figure 2 below). These results indicate that the GF increases the fault duty by approximately 285 Amperes at the 115 kV POI bus. The resultant total fault currents are within Tri-State's planned equipment ratings.

Figure 2: Short-Circuit Model One-Line Diagram

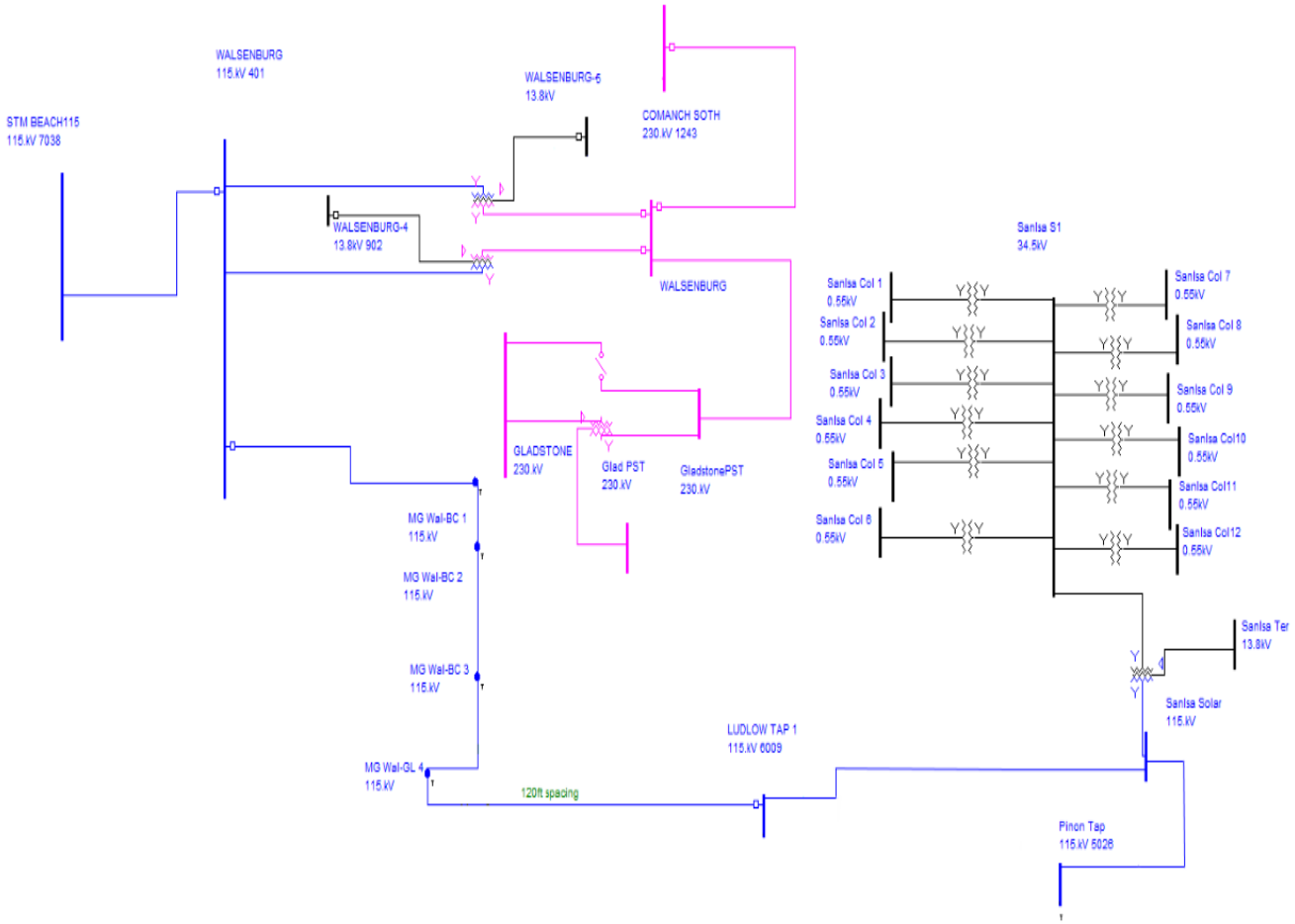

Table 8: Short Circuit Results

System Condition	115 kV POI 3-Ph Fault (Amps)	230 kV Comanche to Walsenburg 3-Ph Fault (Amps)	230 kV Gladstone to Walsenburg 3-Ph Fault (Amps)	115 kV Stem Beach to Walsenburg 3-Ph Fault (Amps)	Gen HV bus to POI 3-Ph Fault (Amps)	115 kV POI SLG Fault (Amps)	230 kV Comanche to Walsenburg SLG Fault (Amps)	230 kV Gladstone to Walsenburg SLG Fault (Amps)	115 kV Stem Beach to Walsenburg SLG Fault (Amps)	Gen HV bus to POI SLG Fault (Amps)	Thevenin System Equivalent Impedance (R + jX p.u. on 100 MVA, 115 kV base)
115 kV POI Bus Fault w/o project, all lines in service	1927	487	76	328		1551	95	67	46		Z_1=0.13955+j0.21995 Z_2=0.14538+j0.23575 Z_0=0.10228+j0.43457
115 kV POI Bus Fault w/o project, Comanche to Walsenburg 230 kV out of service	1596		170	549		1327		71	48		Z_1=0.15414+j0.27418 Z_2=0.16561+j0.30165 Z_0=0.10141+j0v.43827
115 kV POI Bus Fault w/o project, Gladstone to Walsenburg 230 kV out of service	1903	535		343		1533	114		50		Z_1=0.14008+j0.22363 Z_2=0.14612+j 0.2401 Z_0=0.10338+j0.43822
115 kV POI Bus Fault w/o project, Stem Beach to Walsenburg 115 kV out of service	1859	566	87			1514	97	66			Z_1=0.13952+j0.23131 Z_2=0.14569+j0.24934 Z_0=0.10207+j0.43542
115 kV POI Bus Fault with project, all lines in service	1974	487	76	328	55	1836	78	55	38	570	Z_1=0.13303+j0.21674 Z_2=0.13813+j0.23194 Z_0=0.04945+j0.30645
115 kV POI Bus Fault with project, Comanche to Walsenburg 230 kV out of service	1644		170	549	55	1662		57	39	501	Z_1=0.14525+j0.26854 Z_2=0.15515+j0.29469 Z_0=0.04878+j0.30815
115 kV POI Bus Fault with project, Gladstone to Walsenburg 230 kV out of service	1950	535		343	55	1816	94		41	567	Z_1=0.13343+j0.22026 Z_2=0.1387+j0.23608 Z_0=0.04972+j0.30826
115 kV POI Bus Fault with project, Stem Beach to Walsenburg 115 kV out of service	1906	566	87		55	1788	80	55		556	Z_1=0.13268+j0.22755 Z_2=0.13802+j0.24483 Z_0=0.04929+j0.30684

7.0 SCOPE, COST AND SCHEDULE

The project will involve the construction / installation of a three-way 115 kV phase over phase switch structure and associated foundation, two guyed three-pole dead-end structures in the existing 115 kV transmission line, one 90-degree steel termination structure and associated foundation, a 115 kV dead-end A-frame structure and foundations, 115 kV switches mounted on the A-frame, 115 kV metering instrument transformers, and outdoor enclosures for SCADA and metering equipment (see Figures 3 and 4, One-Line Diagrams).

The following cost estimate includes all costs for design and construction, surveying, geotechnical analysis and overheads for Tri-State constructed facilities. The estimate assumes that the interconnection facilities will be located adjacent to the existing 115 kV transmission line on land acquired /owned by the Customer and that any 115 kV line extension beyond the 115 kV dead-end A-frame structure is the Customer's responsibility. All costs for interconnection of the project will be the Customer's responsibility. Note that this cost estimate assumes that Tri-State will design, construct and manage the installation of its facilities as a standalone project separate from the Customer's facilities. It is probable however, that cost savings can be realized by working with the Customer in the layout, site preparation and construction management of the overall project. A Facilities Study can explore such options.

The Customer will be responsible for providing the primary protection (relaying and 115 kV breaker) for the Customer's step-up transformer located in its 115-34.5 kV substation yard. Tri-State will require operational control of the Customer owned 115 kV breaker. To facilitate SCADA control and data acquisition, the Customer will need to provide communication and control circuits from its yard to the Tri-State outdoor enclosures. The Customer must also provide access to analog, indicating, control and data circuits, as required to integrate the project into the design and operation of the Tri-State control system.

The estimated cost for the proposed Project is $1,550,000. All costs are good faith estimates based on assumptions as stated in this report. All estimates are in 2016 dollars.

Figure 3: 115 kV Switching Station One-Line Diagram

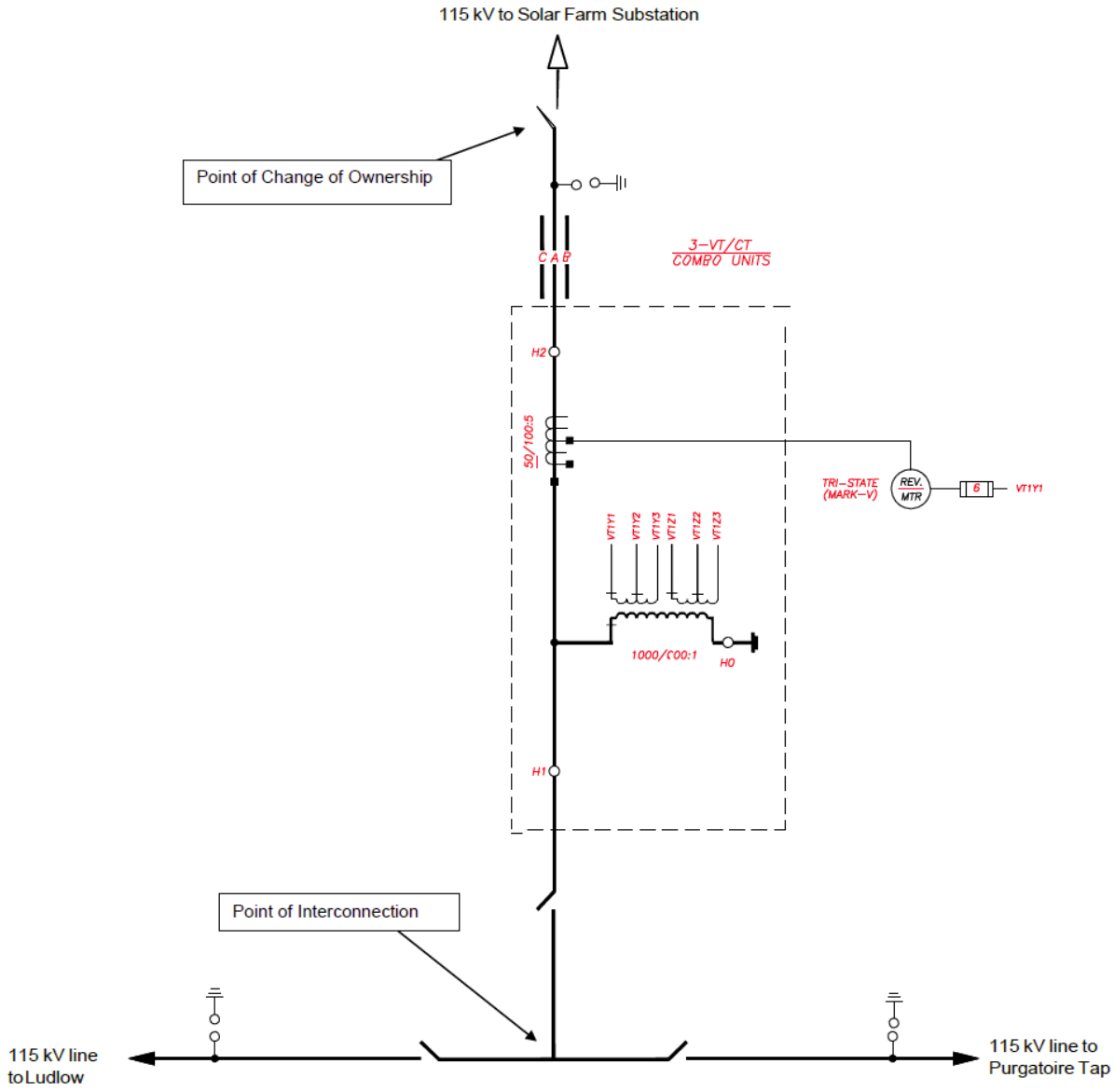

Table 9: Summary Cost Estimate Details – Interconnection Facilities (Non-Reimbursable)

Element	Description	Cost Est. Millions
115 kV interconnection facilities between POI and PCO	Engineer, purchase, construct / install all equipment located at the Point of Interconnection up to the Point of Change of Ownership, consisting primarily of the following equipment: • One (1) 115 kV three-way phase over phase switch, associated structure and foundation. • Two (2) guyed three pole dead-end structures in the existing 115 kV transmission line. • One (1) 90-degree steel termination structure and associated foundation. • One (1) 115 kV A-frame dead-end structure • Three (3) 115 kV disconnect switches mounted on A-frame structure. • Three (3) 115 kV CT/VT combination metering units. • Outdoor enclosures for metering and SCADA • SEL-735 Rev/PQ meter. • Three (3) 115 kV surge arresters (140 kV MCOV or as required). • Telecommunication equipment. • Other associated equipment including, but not limited to, grounding conductor, conduit, cable, insulators, foundations, site prep, yard work, fencing, etc. • State and county permitting, environmental review and storm water plan.	**$1.55 M**
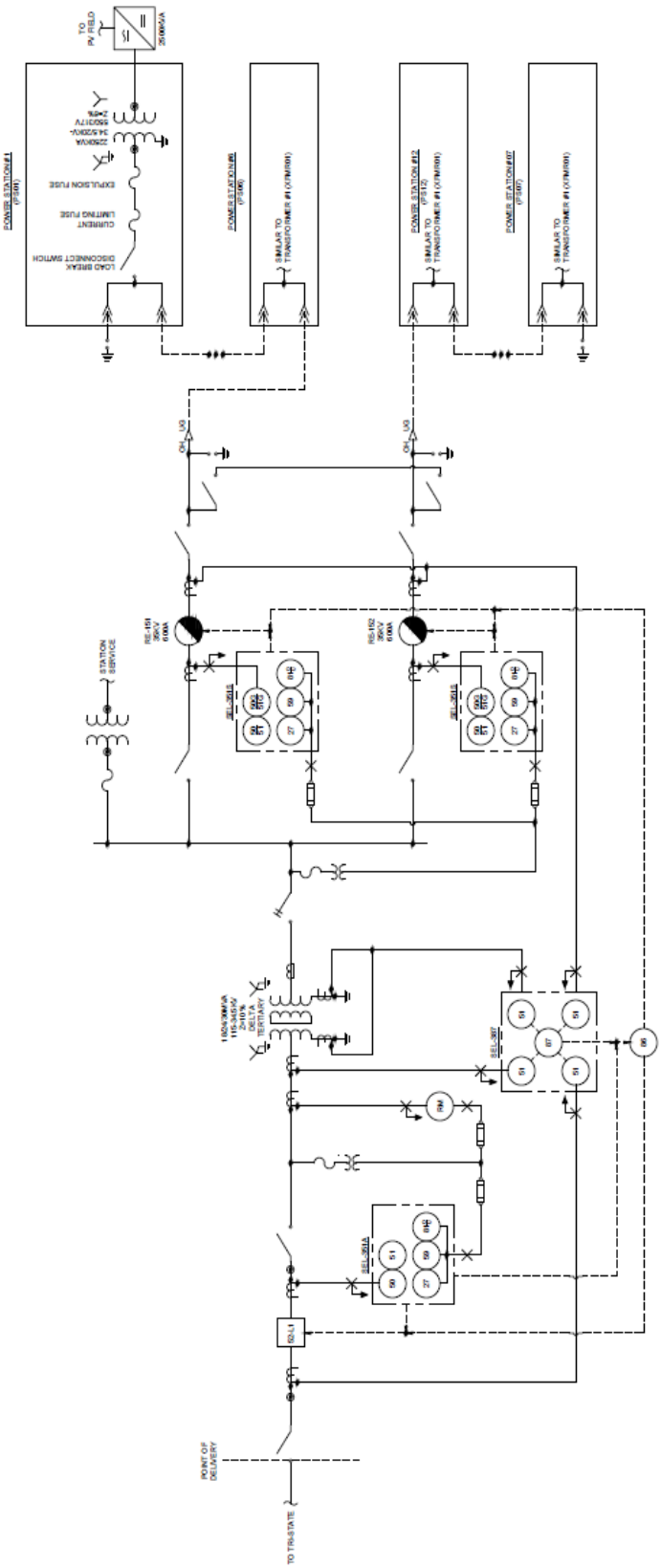
Figure 4: Generating Facility One-Line Diagram