Interconnection System Impact Study
Final Report - May 20, 2013

Generator Interconnection Request No. TI-12-0809
200 MW Wind Energy Generating Facility
In Lincoln County, Colorado

Prepared By:

Jeffery L. Ellis of Utility System Efficiencies, Inc.

Reviewed By:

Ray LaPanse and Mary Ann Zehr
for Tri-State Generation and Transmission Association, Inc.

TABLE OF CONTENTS

Page No.

1.0 EXECUTIVE SUMMARY 3
2.0 BACKGROUND AND SCOPE 5
3.0 GF MODELING DATA 6
4.0 STEADY STATE POWER FLOW ANALYSIS 8
4.1 Criteria and Assumptions 8
4.2. Voltage Regulation and Reactive Power Criteria 10
4.3 Results 11
5.0 DYNAMIC STABILITY ANALYSIS 14
5.1 Criteria and Assumptions 14
5.2 Base Case Model Assumptions 14
5.3 Methodology 17
5.4 Results 18
6.0 SHORT CIRCUIT ANALYSIS 19
6.1 Assumptions and Methodology 19
6.2 Results 20
7.0 SCOPE, COST, & SCHEDULE OF TP FACILITIES 24
7.1 Scope of Work 24
7.2 Cost Estimates (TPIF & TPNU) 24
7.3 Schedule (TPIF & TPNU) 31

8.0 CONCLUSIONS 32

9.0 LIST OF APPENDICES 33
NOTE: Appendices are Tri-State Confidential, are available only to the IC and Affected Systems upon request, and are not for posting on OASIS)

Appendix A: Steady State Power Flow Study – List of N-1 Contingencies

Appendix B: Steady State Power Flow Study – Plots

Appendix C: Dynamic Stability Study – Switching Sequences

Appendix D: Dynamic Stability Study – Waveform Plots
D-1: 2017 HS, Project at 92 MW;
D-2: 2017 HS, Project at 200.1 MW;
D-3: 2017 LA, Project at 92 MW;
D-4: 2017 LA, Project at 200.1 MW.

Appendix E: Generation Dispatch Summary Listing (BAs 10, 70, 73)

Appendix F: Big Sandy 230kV Bus Voltage History – SCADA Hourly Data 2010 – 2012

1.0 EXECUTIVE SUMMARY

This System Impact Study (SIS) is for Generator Interconnection Request (GIR) No. TI-12-0809, relating to a proposed 200.1 MW (referred to 200 MW from here on) wind energy Generating Facility (GF) in Lincoln County, Colorado. The SIS was conducted for the Transmission Provider (TP, Tri-State Generation and Transmission Association, Inc., "Tri-State") in accordance with its Generator Interconnection Procedures (GIP), and includes steady-state power flow, dynamic stability, short-circuit, cost and schedule analyses for interconnection as a Non-Network Resource. In its application the IC proposed an energization In-Service Date (ISD) of 10/15/2015 and a Commercial Operation Date (COD) of 11/15/2015. Cost and schedule estimates are as provided by the TP, and are "good faith" (typically +/-30% accuracy) level estimates only. Higher accuracy (+/- 20%) would be provided as part of an Interconnection Facilities Study.

This proposed Project consists of 87 Siemens SWT-2.3-113 wind turbines with one 230-34.5 kV transformer at the main wind Project Substation, and requested evaluation of a primary Point of Interconnection (POI) at a new interconnection point tapping into the Big Sandy to Landsman Creek 230 kV line approximately 26 miles east of the Big Sandy Substation (see Figures 1 and 2 for reference). A new transmission project that Tri-State has planned and budgeted that will affect the results of these studies is the new Burlington to Wray 230kV line project presently scheduled to be completed, at the earliest, by the end of 2015 or early 2016. Another GIR (TI-04-1123, 120 MW, POI Big Sandy 230 kV, ISD 12/2016) that had been in Tri-State's queue at the beginning of this study has since been withdrawn from the queue and is therefore not included in these final analyses.

<u>Steady-state power flow</u> single contingency (N-1, see Appendix A) analyses were completed for 2017 Heavy Summer (HS) and Light Autumn (LA) loading and dispatch conditions, and included various sensitivity analyses for another GIR previously in the TP's queue, and for a planned future TP project. For the most limiting 2017LA cases and under N-1 conditions the IC project must be limited to 92 MW or less to avoid overloading Affected System (WAPA) 115 kV lines north out of Big Sandy. Refer to Section 4, and specifically Table 7 in Section 4.4 for further details. It is the responsibility of the IC to work with the Affected System (WAPA) to determine the scope, costs, and schedules for the Network Upgrades required to mitigate these overloads.

<u>Reactive power / voltage regulation</u>: The full 200 MW GF would require approximately 21 MVAR of supplemental reactive (capacitive) support (e.g. switched shunt capacitors on the 34.5 kV main collector bus) in order to meet the TP's 0.95 p.f. (lag producing MVAR) criteria at the POI. The reduced 92 MW GF can meet the TP's 0.95 p.f. (lag producing MVAR) criteria at the POI. For either GF size (200 MW or 92 MW project) at operating condition with low output (below 23.0 MW) supplemental reactive (inductive) power equipment (e.g. 4 to 5 MVAR of switched shunt reactors on the 34.5 kV bus) may be required to offset the extra VARs and meet Tri-State's "VAR neutral" criteria of less than approximately 2 MVAR flow at 0 MW. Refer to Section 4.3 for further details.

<u>Dynamic stability analyses</u> were completed for the 2017 HS and LA cases, with short-circuits applied and cleared for multiple transmission line sections near the Wray Substation (see Appendix C). Transient stability was studied with two project outputs: 1) 200.1 MW, which required line reconductoring on the WAPA 115kV lines (based on data supplied by WAPA); and

2) an alternative project output of 92 MW, which does not require any system upgrades. Both project scenarios require that the planned Burlington-Wray 230kV line is in-service. The IC project at either the 200.1 MW or the 92 MW levels did not trip during any of the simulated disturbances and the GF was able to operate at full capacity, local area generators showed stable performance, and remained in synchronism for all contingencies, and acceptable damping and voltage recovery was observed. Refer to Section 5 for further details.

Short-circuit analyses were performed for the IC project both at 0 MW (pre-Project)and at the original GIR 200 MW Project levels, 2016 system case (Burlington – Wray 230 kV line in service), both maximum (N-0) and minimum (N-1) conditions at the Wray POI 230 kV bus. The results indicate that the IC project's short-circuit current injection will not exceed the TP's equipment fault duty at the POI. Refer to Section 6 for further details.

The estimated costs for the TP to design and construct a new 230 kV interconnection (POI) switching station on the Big Sandy – Landsman Creek 230 kV line, consisting of a new 3-point, 230kV ring bus breaker station include the following (see Figure 5 One-Line Diagram in Section 7):

- TP Interconnection Facilities Costs (Non-Reimbursable): $ 0.8 Million;
- TP Network Upgrades Costs (Reimbursable): $4.3 Million
- **TOTAL Costs for Interconnection: $5.1 Million**

These cost estimates do not include any Network Upgrades that may be required remote from this POI, either by Tri-State or on Affected Party Systems (e.g. WAPA).

The earliest ISD for this GIR will depend upon the Network Upgrades (NUs) required for this interconnection as determined by the GIR project MW level. In any event, the ISD would be no earlier than after completion of the TP's new Burlington – Wray 230 kV project, and a minimum of 18 to 20 months after the execution of the GIA or Engineering and Procurement (E&P) contract, and could be significantly longer for additional NUs that may be required beyond the construction of the TP Interconnection Switching Station at the POI.

NOTES:

1. Recent Studies completed for other GIRs in this region indicate that until such time that the TP's new Burlington to Wray 230kV transmission line is in service, any additional generation at this requested POI (including this IC's GF) would only be allowed to interconnect using the transmission system on an "as available" basis in accordance with Section 3.2.1(4) of TP's GIP.

2. Per Section 3.2.2.4 of the TP's GIP, "Interconnection Service does not convey the right to deliver electricity to any customer or point of delivery. In order for (an) Interconnection Customer to obtain the right to deliver or inject energy beyond the Generating Facility Point of Interconnection or to improve its ability to do so, transmission service must be obtained pursuant to the provisions of Transmission Provider's Tariff by either Interconnection Customer or the purchaser(s) of the output of the Generating facility." See Tri-State's OASIS web site for information regarding requests for transmission service, and related requirements and contact information.

2.0 BACKGROUND AND SCOPE

On August 9, 2012, the IC submitted a GIR for a 200 MW wind energy GF to be connected at a new interconnection point tapping into the Big Sandy to Landsman Creek 230 kV line approximately 26 miles east of Big Sandy Substation.

This SIS is prepared in accordance with the TP's GIP and relevant FERC, NERC, WECC and TP guidelines. The objectives are to: (1) evaluate the steady state performance of the system to identify the required TP Interconnection Facilities and TP Network Upgrades; (2) check the GF's ability to meet the TP's voltage regulation and reactive power criteria; (3) assess the dynamic performance of the Transmission System under specified stability contingencies; (4) perform a basic short circuit analysis to provide the estimated maximum (N-0) and minimum (N-1) short circuit currents and identify the impacts on the Transmission System with and without the new generation connected; and (5) provide a preliminary estimate of the costs and schedule for all necessary Transmission Provider's Interconnection Facilities and Network Upgrades, subject to refinement in an Interconnection Facilities Study.

Figure 1- Area Map - One-Line Diagram Of Study Area And Location Of GF

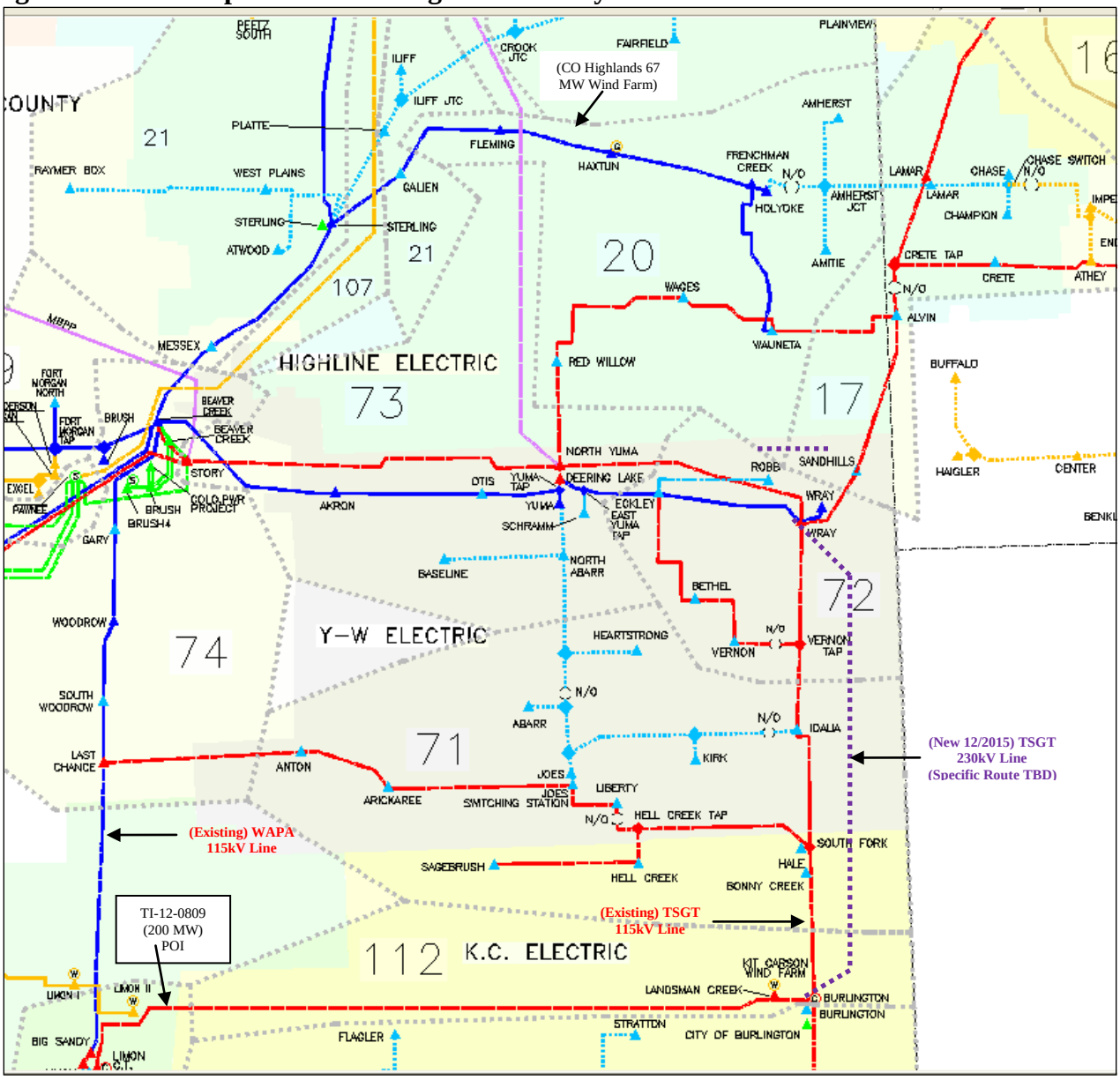

3.0 GF MODELING DATA

Based upon data supplied by the IC, this Project consists of 87 Siemens SWT-2.3-113 wind turbines with one 230-34.5 kV transformer and an approximate 3.32-mile 230 kV generator tie transmission line routed north from the project to a Point of Interconnection (POI) at a new 230 kV substation that is located approximately 26 miles east of Big Sandy on the Big Sandy - Landsman Creek 230 kV line. See Figures 1 and 2 for further details. Model data is based upon information provided by the IC. The IC shall provide actual data and confirm actual reactive power operating capabilities prior to interconnecting this project (ISD), and ultimately prior to the IC's GF being deemed by the TP as suitable for Commercial Operation.

Figure 2 – System GF Interconnection One-Line Diagram (Note: This diagram for illustration purposes only; see Fig. 5, Sec. 7 for a more representative one-line).

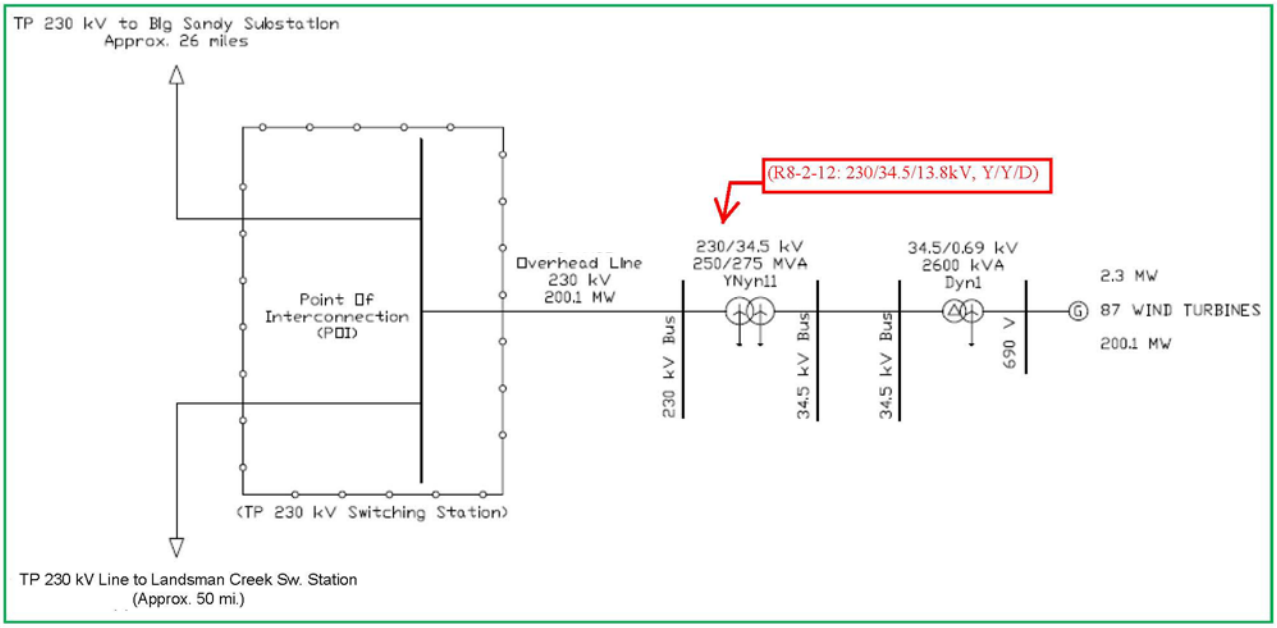

Generator Data: The GF request at 200 MW is comprised of 87 Siemens SWT-2.3-113 wind turbines. Table 1 shows the generator data for power flow modeling. Table 2 shows data from the manufacturer's technical documentation. Table 3 shows the LVRT protection trip levels.

Table 1 - Generator Data for Steady-State Power Flow Analysis

Unit	Description	
Pmax	Name plate rating (lumped equivalent gen model)	2.3 MW
Qmin, Qmax	Reactive capability	0.9 lag to 0.9 lead
Et	Terminal voltage	0.69 kV
Rs	Synchronous resistance	0.0 p.u.
Xs	Synchronous reactance	0.310 p.u.

Table 2 - Power Flow Data for Individual Generating Units

Unit	Description	[*Manufacturer*]
MBase	Generator MVA base	2.56 MVA
Prated	Generator active power rating	2.3 MW
Pmin	Minimum generation	0 MW
Vrated	Terminal voltage	0.69 kV
Srated	Unit transformer Rating	2.6 MVA
Xt	Unit Transformer Reactance (on transformer base)	6.0%
Xt/Rt	Unit Transformer X/R ratio	6.0

Table 3 - Voltage Ride-Through Thresholds And Durations

V (%) at HV POI Bus	Delta V (p.u)	Time (sec)

V (%) at HV POI Bus	Delta V (p.u)	Time (sec)
90	-0.10	> 3.00
75	-0.25	2-3.00
65	-0.35	0.30 – 2.00
45	-0.55	0.15 - 0.30
0	-1.00	< 0.15
110	0.10	>1.000
115	0.15	0.50 -1.00
117.5	0.175	0.20 – 0.50
120	0.20	< 0.20

34.5 kV Collector System: The medium voltage (MV) collector system and generation was modeled as per the collector system layout provided by the IC. The wind farm interconnects to the POI via one 230-34.5 kV transformer and an equivalent feeder circuit modeled as shown in Figure 2. Collector system impedance is based on typical collector system impedance data.

Main GF Substation Transformer: The substation transformer has ratings of 250/275 MVA with the voltage ratio of 230 kV (gnd-wye) - 34.5 kV (gnd-wye), and is assumed to have a 13.8 kV (delta) third winding (see Fig 2, Rev 8-2-2012). The transformer impedance is 12.5% on the 250 MVA base FA rating with X/R of 45.

230 kV Generator Tie Line: The GF to POI line impedance is based on 3.32 miles of 795 kcmil ACSR. The continuous thermal rating is 296 MVA with impedance of R = 0.000744, X = 0.004763, B = 0.004879. All values are in p.u.

4.0 STEADY-STATE POWER FLOW ANALYSIS

4.1 Criteria and Assumptions

Siemens-PTI PSS/E version 32.1.1 software was used for performing the steady-state power flow analysis, with the following study criteria:

1. The starting base cases were WECC 2017 Heavy Summer and Light Autumn cases. These were updated by the TP to reflect the latest system parameters, equipment ratings, generation dispatch and projected loads. Two base cases were utilized:
    a. 2017 Heavy Summer (HS) cases with Project
    b. 2017 Light Autumn (LA) cases with Project
2. The regional generation was adjusted to result in TOT3 path flows of 1400 MW for the 2017HS case, and 1200 MW for the 2017LA case.
3. The nearby XE-PSCo 400 MW wind generation projects at Missile Site (230 & 345 kV) were included at full output in the case models. See also item 5.

    A) The nearby Colorado Highland Wind project generation (91 MW nameplate / 90 MW net at POI, POI on WAPA Fleming – Haxtun 115 kV line at Wildhose Creek SS) was included at full output in the case models. Note that this CHW generation is presently rated at67 MW level, and the preliminary power flow studies were completed at this level. However this wind project will be expanded to 91 MW

nameplate (90 MW net at POI) by the end of 2013, and so the steady-state power flow results have been updated as shown in Tables 6 and 7.

4. See also item 5.
5. The output from TI-12-0809 was accommodated by displacing TP generation resources at Craig (applicable if this GIR were as Network Resource application, but the results should be similar as a Non-Network Resource application). To stress the system locally, the generators were dispatched at the following output.

Table 4: Burlington Regional NR Generation Dispatches

Case	Description	Limon Unit 1 (MW)	Limon Unit 2 (MW)	Kit Carson (MW)	Burlington Unit 1 (MW)	Burlington Unit 2 (MW)
1	2017 Heavy Summer	68	68	51	50	50
2	2017 Light Autumn	77	77	51	55	55

6. The GF was modeled according to data provided by the IC. The wind farm was adequately represented both for assessing power flow and dynamic performance.
7. Power flow (N-0) solution parameters were as follows: Transformer LTC Taps – Stepping; Area Interchange Control – Tie lines and Loads; Phase Shifters and DC Taps – Adjusting; and Switched Shunts - Enabled.
8. Power flow contingencies (N-1) utilized the following solution settings: Transformer LTC Taps – Locked taps; Area Interchange Control – Disabled; Phase Shifters and DC Taps – Non-Adjusting; and Switched Shunts – Lock All. Not allowing these voltage regulating solution parameters to adjust is to provide worse case results.
9. All buses, lines and transformers with nominal voltages greater than or equal to 69 kV in the Tri-State and surrounding areas were monitored in all study cases. N-0 and N-1 conditions were evaluated for any lines and transformers 115kV and greater.
10. All three of the nearby study areas (PNM, Tri-State, and XE/PSCo) were investigated using the same overload criteria. Any thermal loading greater than 98% of the branch rating were documented. In addition, thermal overload increases of 2% or more were tabulated.
11. The GF controls the high voltage bus at the POI and should not negatively impact any controlled voltage buses on the Transmission System.
12. Post-contingency power transfer capability is subject to voltage constraints as well as equipment ratings. Each option was tested against NERC/WECC reliability criteria and additions/exceptions as listed in the following Table 5:

Table 5 - Voltage Criteria

Tri - State Voltage Criteria for Steady State Power Flow Analysis			
Conditions	**Operating Voltages**	**Delta-V**	**Areas**
Normal N-0	0.95 - 1.05		All
Contingency N-1	0.90 - 1.10	7%	Northeastern New Mexico
Contingency N-1	0.90 - 1.10	7%	Southern New Mexico
Contingency N-1	0.90 - 1.10	6%	Other buses in PNM area
Contingency N-1	0.90 - 1.10	7%	Western Colorado
Contingency N-1	0.90 - 1.10	7%	Southern Colorado
Contingency N-1	0.90 - 1.10	6%	Other Tri-State areas

In addition, transmission lines and transformers were monitored for equipment rating violations using Normal Rating for N-0 and Emergency Rating for N-1 as listed in the power flow data.

4.2. Voltage Regulation and Reactive Power Criteria

1. All interconnections are subject to detailed study and may require additional study using more complex models and software such as PSCAD, EMTP or similar. The required mitigation may be in excess of minimums imposed by published standards, according to the best judgment of the TP's engineers.
2. The GF shall be capable of either producing or absorbing VAR as measured at the HV POI bus at a 0.95 power factor (p.f.), across the range of near 0% to 100% of facility MW rating, as calculated on the basis of nominal POI voltage (1.0 p.u. V).
3. The GF may be required to produce VAR from 0.90 p.u. V to 1.04 p.u. V at the POI. In this range the GF helps to support or raise the POI bus voltage.
4. The GF may be required to absorb VAR from 1.02 p.u. V to 1.10 p.u. V at the POI. In this range the GF helps to reduce the POI bus voltage.
5. The GF may be required to either produce VAR or absorb VAR from 1.02 p.u. V to 1.04 p.u. V at the POI, with typical target regulating voltage being 1.03 p.u. V.
6. The GF may utilize switched capacitors or reactors so long as the individual step size is rated to result in a step-change voltage of less than 3% of the POI operating bus voltage. This step change voltage magnitude shall be calculated based upon the minimum system (N-1) short circuit POI bus MVA level as supplied by the TP. The GF is required to supply a portion of the VAR on a continuously adjustable or dynamic basis, as may be supplied from the generators or from a STATCOM or SVC type system. The amount of continuously adjustable VAR shall be equivalent to a minimum of 0.95 p.f. produced or absorbed at the generator collector system Medium Voltage (MV) bus, across the full range (0 to 100%) of rated MW output. The remaining VAR required to meet the 0.95 p.f. net criteria at the HV POI bus may be achieved with switched capacitors and reactors.
7. When the GF is not producing any real power (near 0 MW), the VAR exchange at the POI shall be near 0 MVAR, i.e., VAR neutral.

4.3 Results

1. N-0 (System Intact, Cat. A) Study Results:
   The proposed project generation can be added with no thermal or voltage violations with all lines in-service.

2. N-1 (Single Contingency Cat. B) Study Results:
   Sensitivity study results for N-1 studies of the 2017HS and 2017LA cases without the Big Sandy – Calhan 230-115 kV project, and without the TI-04-1123 project are shown in Tables 6 & 7 below.

   a) With use of the 2017 Heavy Summer case, loss of the Lincoln - Midway 230 kV line results in the (WAPA) Big Sandy – Last Chance 115 kV transmission line slightly exceeding its thermal rating. To eliminate this thermally overloaded element, the project size would have to be reduced to 195 MW (Table 6). The IC would need to consult with WAPA to determine the Network Upgrade(s) required to mitigate this overload.

   b) With use of the 2017 Light Autumn case, loss of the Lincoln - Midway 230 kV line results in several WAPA 115 kV transmission lines exceeding their thermal rating. To eliminate all thermally overloaded elements, the project size would have to be reduced to 92 MW (Table 7). The IC would need to consult with WAPA to determine the Network Upgrade(s) required to mitigate this overload.

   A tabulation of all elements that were triggered by thermal loading is provided in the following tables.

Table 6 (Rev2): 2017 Heavy Summer – Thermal (With Burlington – Wray 230 kV, & Without TI-04-1123 (120 MW)

AFFECTED ELEMENT	CONTINGENCY	Emergency Rating (MVA)	Pre-Project Percent Loading	Post-200 MW Project Loading (%)	Delta (%)	Maximum Output w/out Upgrade (MW)	Owner
BigSandy-Last Chance 115kV	Lincoln-Midway 230 kV Line	109	49.8	101.9	52.1	190.9	WALM

Table 7 (Rev2): 2017 Light Autumn – Thermal Thermal (With Burlington – Wray 230 kV, & Without TI-04-1123 (120 MW)

AFFECTED ELEMENT	CONTINGENCY	Emergency Rating (MVA)	Pre-Project Percent Loading	Post-200 MW Project Loading (%)	Delta (%)	Maximum Output w/out Upgrade (MW)	Owner
BigSandy-Last Chance 115kV	Lincoln-Midway 230 kV Line	109	76.7	**126.3% (137.7 MVA)**	49.6	**92.0**	**WALM**
Last Chance-S.Woodrow 115kV	Lincoln-Midway 230 kV Line	109	73.6	123.7	50.1	103.5	WALM
S.Woodrow-Woodrow 115kV	Lincoln-Midway 230 kV Line	109	73.0	123.9	50.9	103.5	WALM
Gary-Woodrow 115kV	Lincoln-Midway 230 kV Line	109	72.1	124.0	51.9	105.8	WALM
Beaver Ck-Gary 115kV	Lincoln-Midway 230 kV Line	109	71.6	124.3	52.7	108.1	WALM
N.Yuma-Story 230kV	Lincoln-Midway 230 kV Line	284	72.7	98.9	26.2	200.1	WALM

3. Steady-state voltage violations: With the TP's operating voltage criteria range of 0.90 p.u. to 1.10 p.u., under single contingency outage conditions, there are no voltage violations when the GF is at full output.

4. Steady-state contingency voltage deviation: Each Balancing Authority Area's ΔV requirement was applied as per Table 5. There were no ΔV violations at any of the monitored buses.

5. Reactive power required at the POI: At full 200.1 MW output, the VAR capability required at the POI ranges from 65.7 MVAR produced (0.95 p.f. lag) to 65.7 MVAR absorbed (0.95 p.f. lead). This would be the net MVAR to be produced or absorbed by the GF, depending upon the applicable range of voltage conditions at the POI.

   The unit data provided by the IC shows reactive capability of 0.90 p.f. lag to lead. Utilizing only the GF capability based on model data supplied by the IC, a steady-state analysis was performed for the POI voltage levels established by the dispatch in the power flow cases HS and LW. For reference, Table 8 (200 MW GF) and Table 9 (92 MW GF) show the net VAR flow at several levels of GF output and at fixed generator bus p.f. levels, based on voltage at the lumped equivalent model generator terminals and voltage at the POI bus.

   5.a) 200 MW GF: The system model provided by the IC shows that the 200 MW GF can meet the TP's 0.95 p.f. (lag producing MVAR) criteria at the POI, with exception of operating conditions with high output (above 50 MW). In this scenario, the 200 MW GF does not produce the required reactive power (VAR) to meet the 0.95 p.f. requirement at the POI. Therefore, supplemental reactive (capacitive) equipment of approximately 21 MVAR (e.g. switched shunt capacitors on 34.5 kV collector bus) may be required to offset the extra VARs. For the 200 MW GF design when at an operating condition with low MW output (below 31.0 MW) supplemental reactive (inductive) power equipment (e.g. 4 to 5 MVAR of switched shunt reactors on the 34.5 kV bus) may be required to offset the extra VARs and meet Tri-State's "VAR neutral" criteria of less than approximately 2 MVAR flow at 0 MW.

Table 8 Reactive Power Delivered to the WTG Bus, and at POI Bus, Project Size: 200 MW

Base Case	Fixed P.F. at MV Gen Equiv Collector Bus	P, Q, V At Gen Equiv MV			Net P, Q, V, PF At HV POI Bus					
		Pgen (MW)	Qgen (MVAR)	Voltage (p.u.)	P (MW)	Q (MVAR)	PF at POI	Voltage (p.u.)	MVAR to meet PF Reqd at POI of 0.95	MVAR Short(+) or Excess(-)
HS Base Case – 0.90 p.f. lag (producing MVAR)										
	0.90	0	0	0.954	0	5.4	0	0.95	(<2)	-5.4
	0.90	50.025	24.2	0.996	49.4	25.2	0.891	0.95	16.2	-9.0
	0.90	100.05	48.5	1.031	97.8	37.4	0.934	0.95	32.1	-5.3
	0.90	150.07	72.7	1.060	145.3	42.9	0.959	0.95	47.8	+4.9
	0.90	**200.1**	96.9	1.084	**192**	**42.5**	0.976	0.95	**63.1**	**+20.6**
LW Base Case – 0.90 p.f. lead (absorbing MVAR)										
	-0.90	**0**	0	1.054	**0**	**6.6**	0	1.05	(<-2)	**-6.6**
	-0.9	**31.5**	-15.3	**1.038**	**31.3**	**-10.3**	0.950	**1.05**	**-10.3**	**0.0**
	-0.90	50.025	-24.2	1.027	49.5	-21.7	0.916	1.05	-16.3	+5.4
	-0.90	100.05	-48.5	0.993	97.7	-59.7	0.853	1.05	-32.1	+27.6
	-0.90	150.07	-72.7	0.947	144.2	-110.2	0.795	1.05	-47.4	+62.8
	-0.90	200.1	-96.9	0.884	188	-180.4	0.722	1.05	-61.8	+118.6

5.b) 92 MW GF: At the reduced project size of 92 MW output, the VAR capability required at the POI ranges from 30.2 MVAR produced (0.95 p.f. lag) to 30.2 MVAR absorbed (0.95 p.f. lead). This would be the net MVAR to be produced or absorbed by the GF, depending upon the applicable range of voltage conditions at the POI.Table 9 shows the net VAR flow at several levels of GF output and at fixed generator bus p.f. levels, based on voltage at the lumped equivalent model generator terminals and voltage at the POI bus. The system model provided by the IC shows that this GF can meet the TP's 0.95 p.f. criteria (lag producing MVAR) at the POI. . For the 92 MW GF design when at an operating condition with low MW output (below 31 MW) supplemental reactive (inductive) power equipment (e.g. 4 to 5 MVAR of switched shunt reactors on the 34.5 kV bus) may be required to offset the extra VARs and meet Tri-State's "VAR neutral" criteria of less than approximately 2 MVAR flow at 0 MW.

Table 9 Reactive Power Delivered to the WTG Bus, and at POI Bus, Project Size: 92 MW

Base Case	Fixed P.F. at MV Gen Equiv Collector Bus	P, Q, V At Gen Equiv MV			Net P, Q, V, PF At HV POI Bus					
		Pgen (MW)	Qgen (MVAR)	Voltage (p.u.)	P Net (MW)	Q Net (MVAR)	PF at POI	Voltage (p.u.)	MVAR to meet PF Reqd at POI of 0.95	MVAR Short(+) or Excess(-)
HS Base Case – 0.90 p.f. lag (producing MVAR)										
	0.90	0	0.0	0.954	0	5.4	0	0.95	(<2)	-3.4
	0.90	23	11.1	0.974	22.9	15.6	0.826	0.95	7.5	-8.1
	0.90	46	22.3	0.993	45.5	24	0.884	0.95	15.0	-9.0
	0.90	69	33.4	1.01	67.9	30.6	0.912	0.95	22.3	-8.3
	0.90	92	44.6	1.025	90.1	35.9	0.929	0.95	29.6	-6.3
LW Base Case – 0.90 p.f. lead (absorbing MVAR)										
	-0.90	0	0	1.054	0	6.6	0	1.05	(<-2)	-4.6
	-0.9	31.5	-15.3	1.038	31.3	-10.3	0.950	1.05	-10.3	0.0
	-0.90	23	-11.1	1.042	22.9	-5.3	0.974	1.05	-7.5	-2.2
	-0.90	46	-22.3	1.029	45.5	-19.2	0.921	1.05	-15.0	+4.2
	-0.90	69	-33.4	1.015	67.9	-34.9	0.889	1.05	-22.3	+12.6
	-0.90	92	-44.6	0.999	90	-52.9	0.862	1.05	-29.6	+23.3

The IC is responsible to determine equipment that will be installed to ensure that the GF can achieve the net 0.95 p.f. lag and lead capability across the 0 to 200.1 MW net generation output rating as measured at the POI. The TP may require a portion of the new MVAR to be supplied by dynamic reactive power support equipment, as to provide 0.95 lag to lead continuously adjustable or dynamic capability as measured at the generator terminals. Prior to entering into a GIA, the IC shall provide data that demonstrates compliance with the TP's reactive criteria.

5.0 DYNAMIC STABILITY ANALYSIS

5.1 Criteria and Assumptions

5.1.1 NERC/WECC Dynamic Criteria

PSSE version 32.1.1 was used for dynamic stability analysis. Dynamic stability analysis was performed in accordance with the dynamic performance criteria shown in Table W-1 and Figure W-1 from the NERC and WECC TPL-001 through 004 System Performance Criteria. These criteria are shown below.

WECC DISTURBANCE-PERFORMANCE TABLE OF ALLOWABLE EFFECTS ON OTHER SYSTEMS

NERC and WECC Categories	Outage Frequency Associated with the Performance Category (outage/year)	Transient Voltage Dip Standard	Minimum Transient Frequency Standard	Post Transient Voltage Deviation Standard (See Note 2)
A	Not Applicable	Nothing in addition to NERC		
B	≥ 0.33	Not to exceed **25%** at load buses or **30%** at non-load buses. Not to exceed **20% for more than 20 cycles** at load buses.	Not below **59.6** Hz for 6 cycles or more at a load bus.	Not to exceed **5%** at any bus.
C	0.033 – 0.33	Not to exceed **30%** at any bus. Not to exceed **20% for more than 40 cycles** at load buses.	Not below **59.0** Hz for 6 cycles or more at a load bus.	Not to exceed **10%** at any bus.
D	< 0.033	Nothing in addition to NERC		

Table W-1

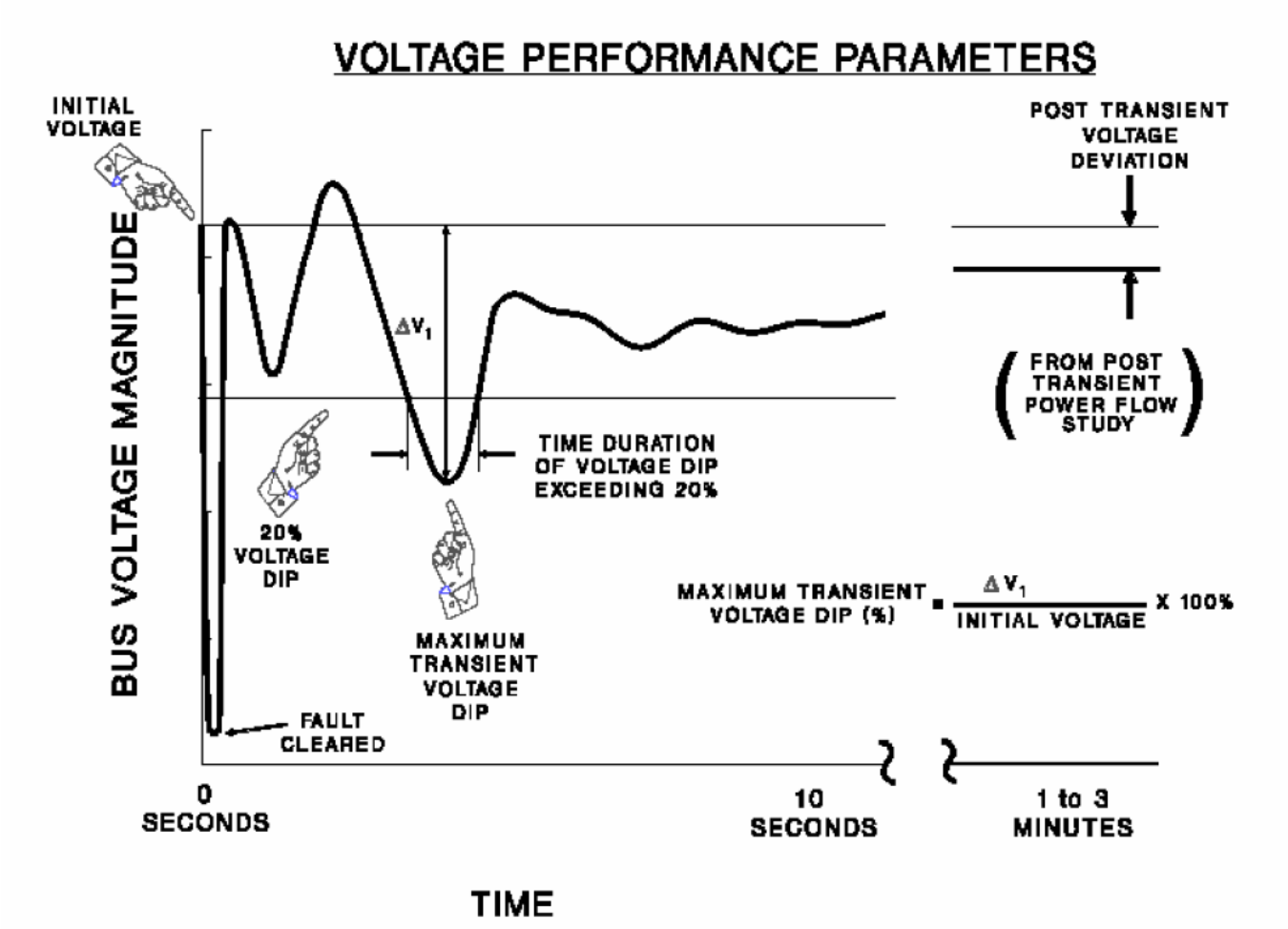

Figure W-1

In addition, the NERC/WECC standard states that "[r]elay action, fault clearing time, and reclosing practice should be represented in simulations according to the planning and operation of the actual or planned systems. When simulating post transient conditions, actions are limited to automatic devices and no manual action is to be assumed."

5.1.2 Voltage Ride-Through Requirements

1. The GF shall be able to meet the dynamic response LVRT requirements consistent with the latest proposed WECC / NERC criteria, in particular, as per the Tri-State LGIP, Appendix G and FERC Order 661a for LVRT (applicable to Wind Generation Facilities).

2. Generating plants are required to remain in service during faults, three-phase or single line-to-ground (SLG) whichever is worse, with normal clearing times of approximately 4 to 9 cycles, SLG faults with delayed clearing, and subsequent post-fault voltage recovery to pre-fault voltage unless clearing the fault effectively disconnects the generator from the system. The clearing time requirement for a three-phase fault will be specific to the circuit breaker clearing times of the

effected system to which the IC facilities are interconnecting. The maximum clearing time the wind generating plant shall be required to withstand for a fault shall be 9 cycles after which, if the fault remains following the location-specific normal clearing time for faults, the wind generating plant may disconnect from the transmission system. A wind generating plant shall remain interconnected during such a fault on the transmission system for a voltage level as low as zero volts, as measured at the POI. The Interconnection Customer may not disable low voltage ride through equipment while the wind plant is in.

3. This requirement does not apply to faults that may occur between the wind generator terminals and the POI.
4. Wind generating plants may be tripped after the fault period if this action is intended as part of a SPS.
5. Wind generating plants may meet the LVRT requirements by the performance of the generators or by installing additional equipment, e.g., Static VAR Compensator, or by a combination of generator performance and additional equipment.

5.2 Base Case Model Assumptions

1. Ride-through characteristics of the GF were based upon data in the default model for Siemens SWT-2.3-113 wind turbines.

2. The GF was modeled using data provided by the IC. The collector system was adequately modeled with an equivalent collector system and one (1) 230/34.5 kV substation transformer.

3. For the full 200.1 MW project, per the Affected System's (WAPA) direction, the existing 115 kV (397.5 kcmil, 109 MVA) transmission lines between Big Sandy and Beaver Creek were reconductored with 795 ACSR Drake conductor rated at approximately 239 MVA (1200 A). This was required for the dynamic studies to solve.

5.3 Methodology

Dynamic stability was evaluated as follows:

1. The 2017HS and 2017LA cases were utilized with the GF in service.

2. System stability is observed by monitoring the Burlington and Lincoln relative rotor angle and system damping.

3. Three-phase faults were simulated for all contingencies. Two contingencies were simulated for each line: a fault was applied at the near end and then applied at the far end of the transmission line. The corresponding stability contingencies to evaluate the wind farm's compliance with NERC/WECC criteria for dynamic stability are listed in the following table.

Table 10 - List of Dynamic Stability Contingencies

Dynamic Stability Contingencies		
No.	Description	Bus Numbers
1	4-cycle 3-phase fault at Future 230 kV bus, trip Future - Big Sandy 230 kV line	73701-73018
2	4-cycle 3-phase fault at Future 230 kV bus, trip Future - Landsman Ck 230 kV line	73701-72710
3	4-cycle 3-phase fault at Landsman Ck 230 kV bus, trip Landsman Ck -Burlington 230 kV line	72710-73036
4	4-cycle 3-phase fault at Big Sandy 230 kV, trip Big Sandy - Lincoln 230 kV line	73018-73531
5	4-cycle 3-phase fault at Lincoln 230 kV, trip Lincoln - Midway 230 kV line	73531-73413
6	4-cycle 3-phase fault at Burlington 230 kV, trip Burlington - Wray 230 kV line	73036-73224
7	4-cycle 3-phase fault at Big Sandy 230 kV, trip 230/115 kV transformer	73018-73017

5.4 Results

Transient stability results identified that the project does not require additional mitigation and is compliant with the NERC/WECC criteria. The simulation results for both summer and autumn show that:

1. The project with 87 Siemens SWT 2.3 MW (200.1 MW) wind turbines did not trip during any of the simulated disturbances and the GF was able to operate at full capacity. Note – as previously stated, the 115 kV WAPA transmission lines between Big Sandy and Beaver Creek were reconductored with 795 ACSR Drake conductor for this condition.
2. The project with 40 Siemens SWT 2.3 MW (92 MW) wind turbines did not trip during any of the simulated disturbances and the GF was able to operate at full capacity. Note, these cases did not require any system upgrades.
3. Local area generators showed stable performance, and remained in synchronism for all contingencies.
4. Acceptable damping and voltage recovery was observed.
5. Study conclusions for summer and autumn cases are shown in the following table.

Table 11 - Dynamic Stability Contingency Results for 92 and 200.1 MW Projects

Dynamic Stability Contingencies		Conclusions 2017 Heavy Sumer and 2017 Light Autumn
No.	Description	
1	4-cycle 3-phase fault at Future 230 kV bus, trip Future - Big Sandy 230 kV line	Stable
2	4-cycle 3-phase fault at Future 230 kV bus, trip Future - Landsman Ck 230 kV line	Stable
3	4-cycle 3-phase fault at Landsman Ck 230 kV bus, trip Landsman Ck -Burlington 230 kV line	Stable
4	4-cycle 3-phase fault at Big Sandy 230 kV, trip Big Sandy - Lincoln 230 kV line	Stable
5	4-cycle 3-phase fault at Lincoln 230 kV, trip Lincoln - Midway 230 kV line	Stable
6	4-cycle 3-phase fault at Burlington 230 kV, trip Burlington - Wray 230 kV line	Stable
7	4-cycle 3-phase fault at Big Sandy 230 kV, trip 230/115 kV transformer	Stable

6.0 SHORT-CIRCUIT ANALYSIS

A short-circuit study was completed for conditions for pre-project and post-project (maximum / worst case 200 MW) conditions. Faults were simulated at the main POI 230 kV TP Interconnection Switching Station for different scenarios (3-phase and single line-to-ground, for maximum system intact (N-0), and for minimum system (N-1) at the main POI 230 kV bus).

6.1 Assumptions and Methodology

1. The Tri-State full Aspen One-Liner software model was used.

2. The only other Interconnection Requests in the area that were modeled as being in service is the TI-08-0502 (Kit Carson 51MW wind energy GF interconnecting at the Landsman Creek Switching Station on the 230 kV line between Burlington and Big Sandy).

3. The tie line, transformers, and generators were modeled as supplied by the IC:

    a. Zero sequence impedances were modeled as 85% of the positive sequence.

    b. The zero sequence impedance of the 230-34.5 kV transformer was modeled equal to the positive sequence impedance.

    c. The delta windings were all modeled to lag the high side phase angles.

    d. The zero sequence impedance of the tie line was estimated based on the impedance provided by the IC and calculated by the Aspen software package.

6.2 Results

Short circuit analysis was performed at POI and at the nearest buses from the project POI. Three phase-to-ground and single phase-to-ground faults were applied directly to the substation buses. The results listed below are for 2016 system conditions with the new / planned Burlington – Wray 230 kV line also in-service, for both pre-project and worst case post-Project (200 MW initial GIR requested) scenarios. Note that the short-circuit currents would be lower for the smaller GF sizes (e.g. 92 MW).

Table 10 lists the POI 230 kV network grid Thevenin equivalent impedances.

Table 10 - Short Circuit Results (2016 case year)

System Condition*	POI 230kV Bus (Total) 3-Ph Fault Level (Amps)	BSAN to POI 3-Ph Fault Current Flow (Amps)	LAND to POI 3-Ph Fault Flow (Amps)	Gen HV to POI 3-Ph Fault Flow (Amps)	POI 230kV Bus (Total) SLG Fault Level (Amps)	BSAN to POI SLG Fault Current Flow (Amps)	LAND to POI SLG Fault Flow (Amps)	Gen HV to POI SLG Fault Flow (Amps)	Thevinin System Equivalent Impedance (R + jX p.u. on 100MVA, 230 kV base)
POI 230kV Bus Fault (w/o IC generation; all lines in service)	**3897**	2381	1516		**3158**	1941	1217		Z1(pos) = 0.00757+j 0.06397 Z0(zero) = 0.02297+j 0.10750
POI 230kV Bus Fault (w/o IC generation; BSAN-POI 230kV Out-of-Service)	1529		1529		1219		1219		Z1(pos) = 0.02001+j 0.16294 Z0(zero) = 0.06528+j 0.28236
POI 230kV Bus Fault (w/o IC generation; LAND-POI 230kV Out-of-Service)	2394	2394			1950	1950			Z1(pos) = 0.01237+j 0.10412 Z0(zero) = 0.03524+j 0.17354
POI 230kV Bus Fault (with IC gen 200MW; all lines in service)	**4974**	2381	1516	1080	**5128**	2081	1310	1744	Z1(pos) = 0.00492+j 0.05023 Z0(zero) = 0.0050+j 0.045670
POI 230kV Bus Fault (with IC gen 200MW; BSAN-POI 230kV Out-of-Service)	2607		1529	1080	2957		1366	1596	Z1(pos) = 0.00787+j 0.09598 Z0(zero) = 0.00477+j 0.06173
POI 230kV Bus Fault (with IC gen 200MW; LAND-POI 230kV Out-of-Service)	3471	2394		1080	3784	2128		1661	Z1(pos) = 0.00644+j 0.07202 Z0(zero) = 0.00473+j 0.05431

*Landsman Creek Wind Farm, Burlington Gen and Limon Gen enabled

Figure 3: Short-Circuit Model One-Line Diagram (1 of 2)

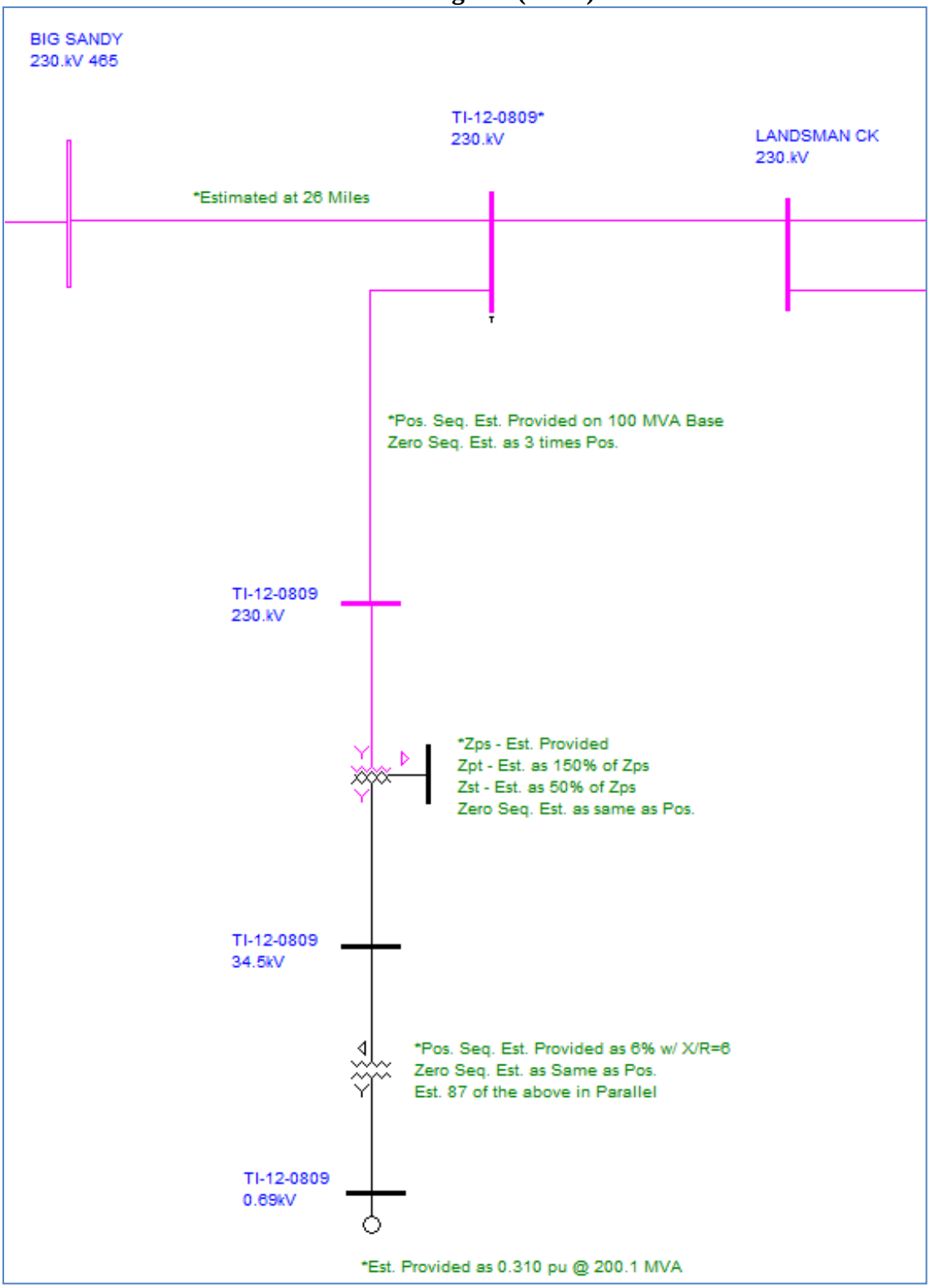

Figure 4: Short-Circuit Model One-Line Diagram (2 of 2)

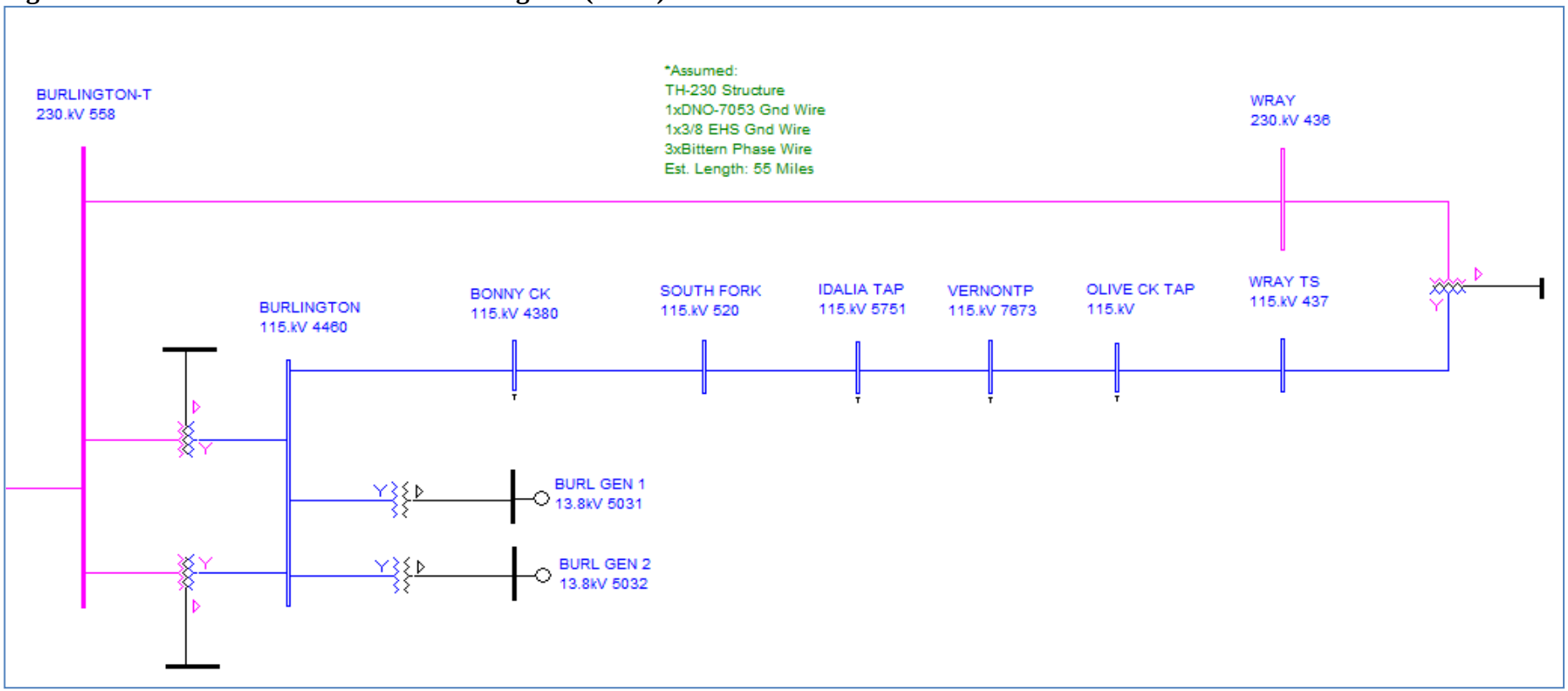

These results indicate that a 200 MW GF (the original GIR request) has an approximate 1,100 amp (3-phase, 4974 - 3897) and 2,000 amp (SLG, 5128 - 3158) impact / maximum increase in the total bus fault current magnitudes at the POI 230kV bus. These impacts do not result in exceeding any breaker interrupt ratings at the new POI or nearby Big Sandy or landsman Creek Substations. Note that the short-circuit currents would be lower for the smaller GF sizes (e.g. 92 MW).

7.0 SCOPE, COST & SCHEDULE OF TP FACILITIES

All cost estimates are good faith budgetary estimates in 2013 dollars, are approximate "good faith" (typically +/-30% accuracy) level estimates under the assumptions stated below. **Total Cost of local POI Transmission Provider's Interconnection Facilities (TPIF) and Transmission Provider Network Upgrades (TPNU)**: The estimated total cost is **$ 5.1 Million**. This total is comprised of the TP's Interconnection Facilities ($0.8 Million), plus the TP's Network Upgrades ($4.3 Million), and as described in detail in Sections 7.2 and 7.3 below. It is estimated that it will take approximately **18 to 20 months** after receiving authorization to proceed for the TP to complete the engineering, design, procurement, construction, and testing activities identified for the scope of work in this SIS. Furthermore, the duration for completing this project may be significantly later (a year or more) should a Certificate of Public Convenience and Necessity (CPCN) be required by the Colorado Public Utilities Commission (CPUC) for this construction.

7.1 Scope of Work

The IC's GF 230-34.5 kV main substation is expected to be located remote from the TP's new POI switching station. It is assumed that the new POI switching station is to be located north of the existing Big Sandy – Landsman Creek 230 kV line, at a point approximately 26 miles east of Big Sandy, and will require a new 5 to 10-acre site to be permitted and purchased by Tri-State, and located on the east side of the existing line, and no closer than adjacent to the existing line's ROW. This site should be adequate to allow for the initial construction of a 2-bay, breaker-&-half design (operated initially as a 3-point ring bus) switchyard, but allowing for future expansion of at least one additional 3-breaker bay. It is expected that installing the new 230 kV transmission line structure (s) required to interconnect the new POI switching station with the existing Big Sandy - Landsman Creek 230 kV line at the POI location will require short term outages.

Note that the IC will be responsible for providing the primary protection (relaying and the interrupting device) for the IC's step-up transformer located in its remote 230-34.5 kV substation yard. Equipment in the TP's POI switching station will only provide backup protection for the IC's 230-34.5 kV main transformer in the event of equipment failure or malfunction in the IC's facility. To facilitate protective relaying and data acquisition between the TP's POI switching station and the IC substation, the IC will provide fiber optic cables (OPGW) on its radial 230 kV transmission line to provide communication channels for data communication (SCADA), metering (real time), and protection (relaying).

7.2 Cost Estimates (TPIF, TPNU)

The cost estimates are broken out into two categories: a) TP's Interconnection Facilities (equipment installed between the Point of Interconnection (POI) tap point into the main bus and the Point of Change of Ownership (PCO) line termination dead-end structure inside the switching station fence line; and b) TP's Network Upgrades consisting of the

rest of the facilities installed in the POI switching station, and any additional facilities or modifications to the TP network required in association with the POI switching station. The estimate includes all site work such as grounding and conduit installation inside the TP's switchyard. Unless otherwise noted, the estimate does not include access roads or any site work outside the TP's POI switchyard, as these will need to be determined as part of the actual design work once the Project has been approved. The estimates do include the purchase of land, and assumes that all county and environmental permits as required for the TP's POI switching station will be obtained by the TP, unless otherwise noted.

Total Cost (local POI TPIF and TPNU only): The estimated total cost is

- **$ 5.1 Million**. This total is comprised of the TP's Interconnection Facilities ($0.8 million), plus the TP's Network Upgrades ($4.3 million), and as shown in Fig. 5, and described in detail in section 7.2 below.

7.2.1 Transmission Provider's Interconnection Facilities:

These are non-reimbursable facilities that are to be constructed, owned and operated by the TP, located between the POI (tap point into the main bus) and the Point of Change of Ownership (PCO, line dead-end structure inside the substation fence line), and dedicated for the IC's interconnection and power flow. See Figure 5 and Table 11 below for reference.

- **Approximate cost of TPIF (at POI SS) = $ 0.8 Million**.

Figure 5 – TP 230 kV Interconnection Switching Station One-Line Diagram

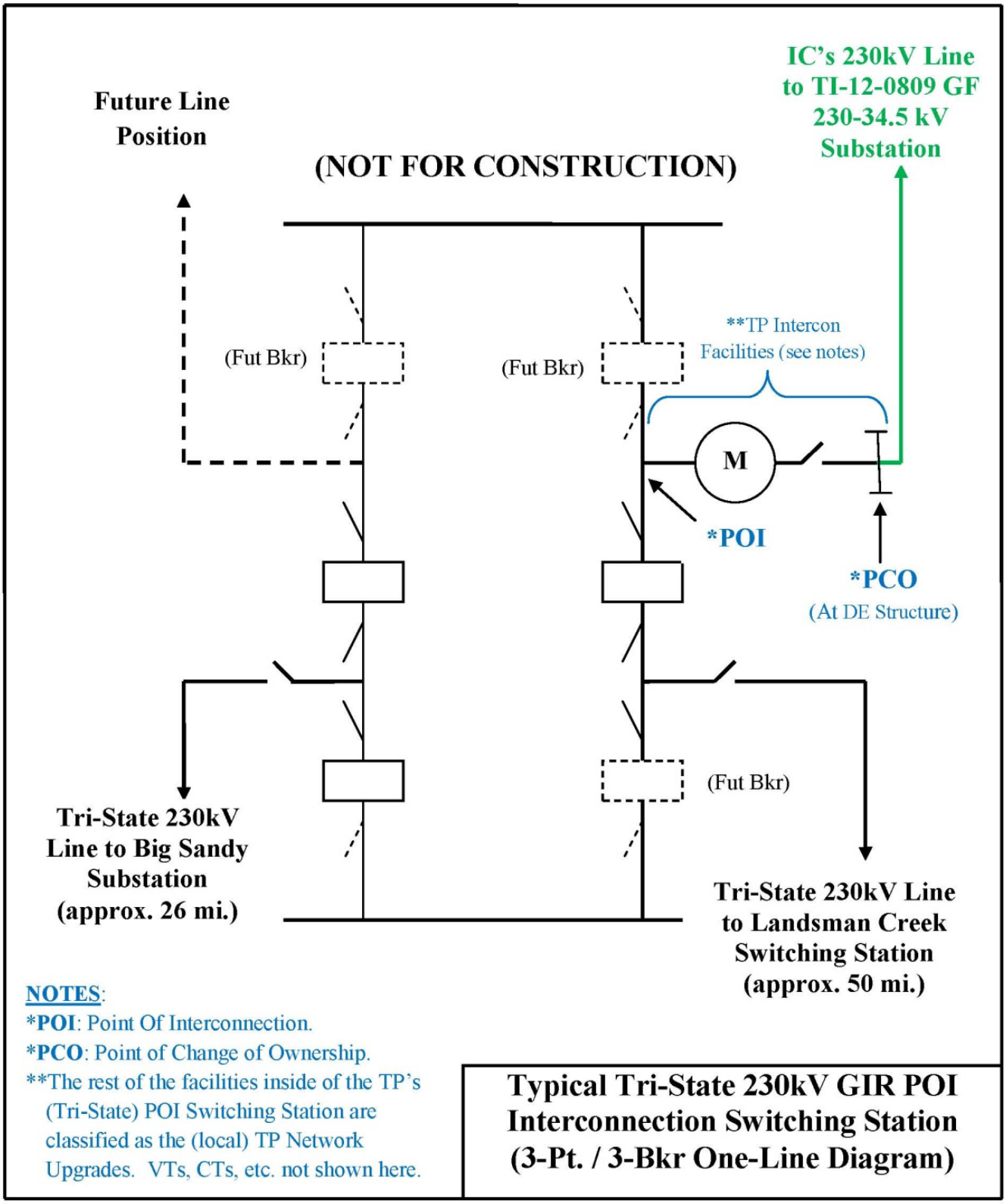

Table 11: Summary Cost Estimate Details – Transmission Provider's Interconnection Facilities (In TP's POI Interconnection Switching Station, Non-Reimbursable)

Element	Description	Cost Est. Millions
TP Interconnection Facilities **TP POI Interconnection Switching Station** **(IC 230 kV line termination equipment portion between PCO & POI)**	Engineer, purchase, construct / install and test all TP equipment installed inside of the POI Switching Station that is located between the PCO (IC line termination dead-end) and the POI (main bus tap point), consisting primarily of the following equipment: • One (1) 230 kV 3-ph gang line end disconnect switch and associated structure. • *Three (3) 230 kV metering current transformers (CTs), high accuracy class, extended range. • *Three (3) 230 kV metering voltage transformers (VTs, high accuracy class). *Or alternative CT/VT combination metering units. • One (1) 230 kV lot revenue & PQ metering panel including SEL-735 Rev/PQ meter (typical), Shark (typical) line meters, testing / checkout / commissioning. • One (1) lot of relaying for the IC radial 230 kV line protection (SEL-311C primary – pilot, SEL-321 secondary, and SEL-501 breaker-failure). • Three (3) 230 kV surge arresters (140 kV MCOV or as required). • Line termination SCADA and telemetry communication equipment additions to substation RTU. • Install as required all other associated required substation equipment including but not limited to grounding conductor, conduit and cable, insulators, foundations, support steel and tubular and cable bus.	**$0.8 M**
	Estimated Time Frame for Engineering, Procurement, Construction, and Commissioning	***18 to 20 Months (*See Schedule Notes)**

7.2.2 Transmission Provider's Network Upgrades:

These are reimbursable facilities, initially funded by the IC and refundable over time per the GIP, to be constructed, owned and operated by the TP, located on the TP's side of the POI. See Figure 5 and Table 12 below for reference.

- **Approximate cost of TPNU (at POI SS) = $ 4.3 Million**.

Table 12: Summary Cost Estimate Details – Transmission Provider's Network Upgrades (Reimbursable)

Element	Description	Cost Est. Millions
TP Network Upgrades: **TP POI Interconnection Switching Station Site (Land)**	Procure new 5 to 10-acre site, including all costs associating with land purchase, permitting, etc. • Land Use Permitting • Environmental Compliance Assessment • Property Subdivision for Site • Site Acquisition	**$0.10 M**
TP Network Upgrades: **TP POI Interconnection Switching Station** **(not including IC 230 kV line termination equipment)**	New Tri-State 3-point ring bus 230 kV POI Switching Station on the Big Sandy – Landsman Creek line. The new TP network Upgrades scope includes typical testing, checkout, and commissioning testing. The switching station design will be such as to accommodate future expansion into a full breaker-&-half design, minimum of three bays (two line or transformer termination positions per bay). • Three (3) 230 kV power circuit breakers. • Six (6) 230 kV 3-ph gang disconnect switch and associated structure (for breakers / bus). • Two (2) 230 kV 3-ph line end MOG disconnect switches and associated structure. • Six (6) 230 kV capacitive voltage transformers (CCVTs), 1200/2000:1 ratio, dual secondary windings, for relaying and metering for the Big Sandy and Landsman Creek 230 kV line terminations. • Two (2) 230 kV line meters Shark (typical). • One (1) lot digital fault recorder (DFR), Tesla (typical). • Two (2) lot of relaying for the Big Sandy – Landsman Creek 230 kV line terminations protection (SEL-311C primary – pilot, SEL-321 secondary, and SEL-501 breaker-failure). • Six (6) 230 kV surge arresters (140 kV MCOV or as required), for the Big Sandy – Landsman Creek 230 kV line terminations.	**$3.28 M**

Element	Description	Cost Est. Millions
	• One (1) lot SCADA and telemetry RTU communication equipment. • Install as required all other associated required substation equipment including but not limited to grounding conductor, conduit and cable, insulators, foundations, support steel and tubular and cable bus, trenches, site prep / yard work, fencing, etc. • One (1) 230 kV – 120/240V, 100 kVA, SSVT voltage transformer, for primary AC station service supply. • AC station service supply, secondary / alt. service, (either from local distribution service, or alternatively emergency generator (propane, diesel, or similar fuel supply); • One control building including batteries, AC & DC load centers, panels, etc.;	
TP Network Upgrades: **230 kV Big Sandy – Landsman Creek T-Line In/Out Tap to POI Substation**	• Two (2) 230 kV single-pole transmission line deadend / angle structures, including foundations. • 230 kV transmission line conductor installed a short distance / single span length between new transmission pole structures interconnecting between a span from the Big Sandy – Landsman Creek lines and the new POI Switching Station located adjacent to the existing Big Sandy – Landsman Creek line (approximately 26 miles east of Big Sandy Sub).	**$0.49 M**
TP Network Upgrades: **Big Sandy Sub – Relaying Mods**	• Relay settings changes (labor) for new TP POI Switching Station line termination protection configuration.	**$0.01 M**
TP Network Upgrades: **Landsman Creek Sw Sta – Relaying Mods**	• Relay settings changes (labor) for new TP POI Switching Station line termination protection configuration.	**$0.01 M**

Element	Description	Cost Est. Millions
TP Network Upgrades: **Microwave Com Facilities**	• Install new MHSB Microwave communications system for relaying channels, SCADA and voice communications, revenue and real-time metering channels (FOCUS fiber optic coms to GF) required at the POI switching station. Installation to include new 150-ft tall self supporting tower and foundations, antennas, radios, etc. equipment and rack (installed in main switching station control bldg.), cabling interface equipment and ancillary equipment.	**$0.38 M**
	TOTAL TP Network Upgrades (Local)	**$4.3 M**
	Estimated Time Frame for Engineering, Procurement, Construction, and Commissioning	***18 to 20 Months (*See ScheduleNotes)**

NOTE: The costs of additional potential TP Network Upgrades beyond the local NU shown here will be discussed with the IC and finalized as necessary in the final SIS report. The costs and scope of NU required by Affected Systems will need to be discussed between the IC and Affected System, and are not being specifically identified in this SIS report.

General Cost Assumptions

1) The cost estimates provided are based upon the actual costs for the recently constructed Landsman Creek 230 kV Switching Station, but modified as appropriate for this specific SIS.

2) Tri-State will purchase & own land for POI Switching Station site, or if agreed to in the GIA the IC may have the option to secure POI site and transfer ownership to TP (to be determined at time of signing GIA if not sooner). Assumes 5 to 10 acre POI Switching Station site purchased to allow for undesignated future expansion, and site location located approximately 26 mi. east of Big Sandy Substation.

3) Assumes that no ROW is required for the transmission line in/out tap, local County land use permitting will be coordinated with the IC permitting activities, and that the site is located on dry land crop area as depicted on the regional site maps as supplied by the IC for this Project.

4) Costs are good faith high-level estimates based upon assumptions as stated in this SIS report, in 2013 dollars, and assume that no RUS funding is required for this IC-funded project work.

5) The Interconnection Customer is responsible for funding, construction and ownership of all (radial) transmission facilities from the proposed generator

substation to the Point of Change of Ownership (PCO) located at the Point of Interconnection Switching Station.

6) The Interconnection Customer will supply enough transmission conductor from their last structure outside the POI substation for Termination into the POI Switching Station line dead-end structure.

7) Interconnection Customer is responsible for all GF Engineering, Procurement, and Construction for all GF, including any STATCOM type voltage regulation / reactive compensation devices located at their generation site or along their long interconnecting transmission line to just outside the POI sites.

7.3. SCHEDULE

It is estimated that it will take approximately 18 to 20 months after receiving authorization to proceed for the TP to complete the engineering, design, procurement, construction, and testing activities identified for the scope of work in this FacS (ISD / energization estimated at 19 months after approval to proceed is obtained).

The permitting time frames are included, but this study assumes that a Certificate of Public Convenience and Need (CPCN) or similar local governmental, environmental, or Federal regulatory authorization requirements are minimal. Actual time frames will vary due to local and Federal requirements, noting that the actual construction activities at the new POI Switching Station site cannot begin until the site has been permitted acquired. This schedule assumes that this permitting and acquisition process will take 18 to 20 months to complete, with 8 months of this being associated with the land use permitting activities with local County or applicable jurisdictions. Should the IC be able to begin some of these permitting activities for the site in advance of the TP's activities, but still be coordinated with the TP requirements, then the total time required by the TP for this 18 to 20 month schedule may be able to be reduced by several months. Should a CPCN (or similar) be required by the Colorado Public Utilities Commission (CPUC) for the construction of the TP's POI Switching Station, then it is estimated that the schedule could be extended by a year or more. Schedule estimates stated are after authorization to proceed has been obtained, such as from a signed GIA, E&P Agreement, or similar.

As identified in section 4.4 of this report, additional potential Network Upgrades may be required to mitigate overloads on an Affected System (WAPA). The IC will be responsible to make arrangements with WAPA to obtain a cost estimate and schedule for any upgrades required by WAPA.

8.0 CONCLUSIONS

After the new Burlington to Wray line is in service at the end of 2015 or early 2016, the project can be interconnected with the following conditions. For the full 200 MW project output, additional Network Upgrades beyond those required at the POI will be required to mitigate thermal overloads on both the Tri-State and WAPA (Affected System) systems. As a result of this SIS, the IC requested that the dynamics studies be completed for both the 200

MW full project and the 92 MW reduced project sizes. The IC will need to identify a single project size before moving into the Facilities Study phase. The POI will be at a new TP 230 kV Interconnection Switching Station on the Big Sandy to Landsman Creek 230 kV line with an ISD of January 1, 2016 or as early as feasible once the new 230 kV Burlington to Wray line is completed and in-service. The IC will need to confirm this ISD before moving into the Facilities Study phase. To the extent that there is a possible need for mitigation to protect an Affected System, the IC is responsible to address this item with the Affected System owner (WAPA).

Regarding reactive power / voltage regulation requirements, the system model provided by the IC shows that the full 200 MW GF would require approximately 21 MVAR of supplemental reactive (capacitive) support (e.g. switched shunt capacitors on the 34.5 kV main collector bus) in order to meet the TP's 0.95 p.f. (lag producing MVAR) criteria at the POI. The reduced 92 MW GF can meet the TP's 0.95 p.f. (lag producing MVAR) criteria at the POI. For either GF size (200 MW or 92 MW project) at operating condition with low output (below 23.0 MW) supplemental reactive (inductive) power equipment (e.g. 4 to 5 MVAR of switched shunt reactors on the 34.5 kV bus) may be required to offset the extra VARs and meet Tri-State's "VAR neutral" criteria of less than approximately 2 MVAR flow at 0 MW..

NOTES:

1. Recent Studies completed for other GIRs in this region indicate that until such time that the TP's new Burlington to Wray 230kV transmission line is in service, any additional generation at this requested POI (including this IC's GF) would only be allowed to interconnect using the transmission system on an "as available" basis in accordance with Section 3.2.1(4) of TP's GIP.

2. Per Section 3.2.2.4 of the TP's GIP, "Interconnection Service does not convey the right to deliver electricity to any customer or point of delivery. In order for (an) Interconnection Customer to obtain the right to deliver or inject energy beyond the Generating Facility Point of Interconnection or to improve its ability to do so, transmission service must be obtained pursuant to the provisions of Transmission Provider's Tariff by either Interconnection Customer or the purchaser(s) of the output of the Generating facility." See Tri-State's OASIS web site for information regarding requests for transmission service, and related requirements and contact information.

8.0 LIST OF APPENDICES

NOTE: Appendices are Tri-State Confidential, are available only to the IC and Affected Systems upon request, and are not for posting on OASIS)

Appendix A: Steady State Power Flow Study – List of N-1 Contingencies

Appendix B: Steady State Power Flow Study – Plots

Appendix C: Dynamic Stability Study – Switching Sequences

Appendix D: Dynamic Stability Study – Waveform Plots:

D-1: 2017 HS, Project at 92 MW;
D-2: 2017 HS, Project at 200.1 MW;
D-3: 2017 LA, Project at 92 MW;
D-4: 2017 LA, Project at 200.1 MW.

Appendix E: Generation Dispatch Summary Listing (BAs 10, 70, 73)

Appendix F: Big Sandy 230kV Bus Voltage History – SCADA Hourly Data 2010 – 2012