PACIFICORP
A MIDAMERICAN ENERGY HOLDINGS COMPANY

Small Generator
Qualifying Facility Interconnection
System Impact Study Report

Completed for
Q0073
(A Qualifying Facility in Utah)

Proposed Interconnection:
Spanish Fork – Santaquin 46 kV line,
near the Spanish Fork Substation,
in Utah County, Utah

September 19, 2006

TABLE OF CONTENTS

1.0 Description of the Generating Facility 1
2.0 Scope of the Study 1
3.0 Study Assumptions 1
4.0 Description of Proposed Interconnection 2
5.0 Planning Study Results 3
6.0 Requirements, Cost, & Schedule 5
6.1 Requirements 5
6.1.1 Generating Facility Modifications 5
6.1.2 Transmission Modifications 5
6.1.3 Existing Breaker Modifications – Short-Circuit 5
6.1.4 Protection Requirements 5
6.1.5 Data Requirements (RTU) 7
6.1.6 Electronic Communication Requirements 8
6.1.7 Substation Requirements 8
6.1.8 Metering Requirements 8
6.2 Cost Estimate 9
6.3 Schedule 9
7.0 Affected Systems 9
8.0 Appendices 9

1.0 Description of the Generating Facility

Q0073 ("Interconnection Customer") has requested that PacifiCorp ("Transmission Provider") perform a System Impact Study ("Study") for the proposed interconnection to its system of Interconnection Customer's 19.0 MW wind power project ("Project"), Qualifying Facility. Interconnection Customer is installing nine 2.1 MW Suzlon S88 wind turbines that will be located near the intersection of Highways 6 and 89 in Utah County, Utah. The requested in-service date for this Project is May, 2007.

2.0 Scope of the Study

The System Impact Study shall:

- Identify and detail the electric system impacts that would result if the proposed Small Generating Facility were interconnected without project modifications or electric system modifications, focusing on the adverse system impacts identified by the feasibility study, or the study potential impacts, including but not limited to those identified in the scoping meeting.
- Evaluate the impact of the proposed interconnection on the reliability of the electric system.
- Consist of: a short circuit analysis, a stability analysis, a power flow analysis, voltage drop and flicker studies, protection and set point coordination studies, and grounding reviews, as necessary.
- State the assumptions upon which it is based, state the results of the analyses, and provide the requirement or potential impediments to providing the requested interconnection service, including a preliminary indication of the cost and length of time that would be necessary to correct any problems identified in those analyses and implement the interconnection.
- Provide a list of facilities that are required as a result of the Interconnection Request and non-binding good faith estimates of cost responsibility and time to construct.

3.0 Study Assumptions

This Study assumes the following:

- The Generating Facility is a Qualifying Facility (QF).

- The output of the generation is proposed to be tied to the existing 46kV network south of Spanish Fork substation. The bulk of the output (89% at summer peak) will feed south into the Santaquin, Mona & Nephi areas. The remaining output will feed into Transmission Provider's remaining 46kV network and also into SUVPS (Southern Utah Valley Power System).
- The output of the generation is dependent on the strong tie between the generation tap and Spanish Fork substation. When this tie is out of service, the generation is tied into a very weak 46kV network south to Santaquin substation – in this system configuration the generation must be taken off line. This would be for all planned and unplanned outages.
- The WECC base case used in the study is a heavy summer 2006 case with normal area load transfers into the Wasatch Front. The project is modeled in the power flow study as one 19 MW generating unit at full output directly connected to the Spanish Fork to Santaquin 46kV line approximately 1.25 miles south of Spanish Fork substation.
- Local existing and proposed generation was modeled at normal outputs. There is no new generation planned for the 46kV system fed out of Spanish Fork or Nebo substations to the south.
- It is assumed that the project will provide adequate reactive compensation to deliver power at unity power factor at the point of interconnection. It is not deemed necessary to perform a dynamic analysis as part of this system impact study.

4.0 Description of Proposed Interconnection

The proposed point of interconnection for the 19 MW of wind generation is on the existing Spanish Fork to Santaquin 46kV transmission line. The new 46kV tap and isolation switches will be installed approximately 1.25 miles south of Spanish Fork substation for the interconnect. The Point of Interconnection will be at an existing pole on the west side of Highway 6, where the existing 46 kV line between the Spanish Fork and Santaquin substations crosses over to the east side of Highway 6. The proposed tap is shown in Figure 1.

This transmission line currently operates as a closed 46kV loop between Spanish Fork and Santaquin substations providing between 5 and 14 MW of power south into the Santaquin area. The current load attached to this line is approximately 0.7 MW.

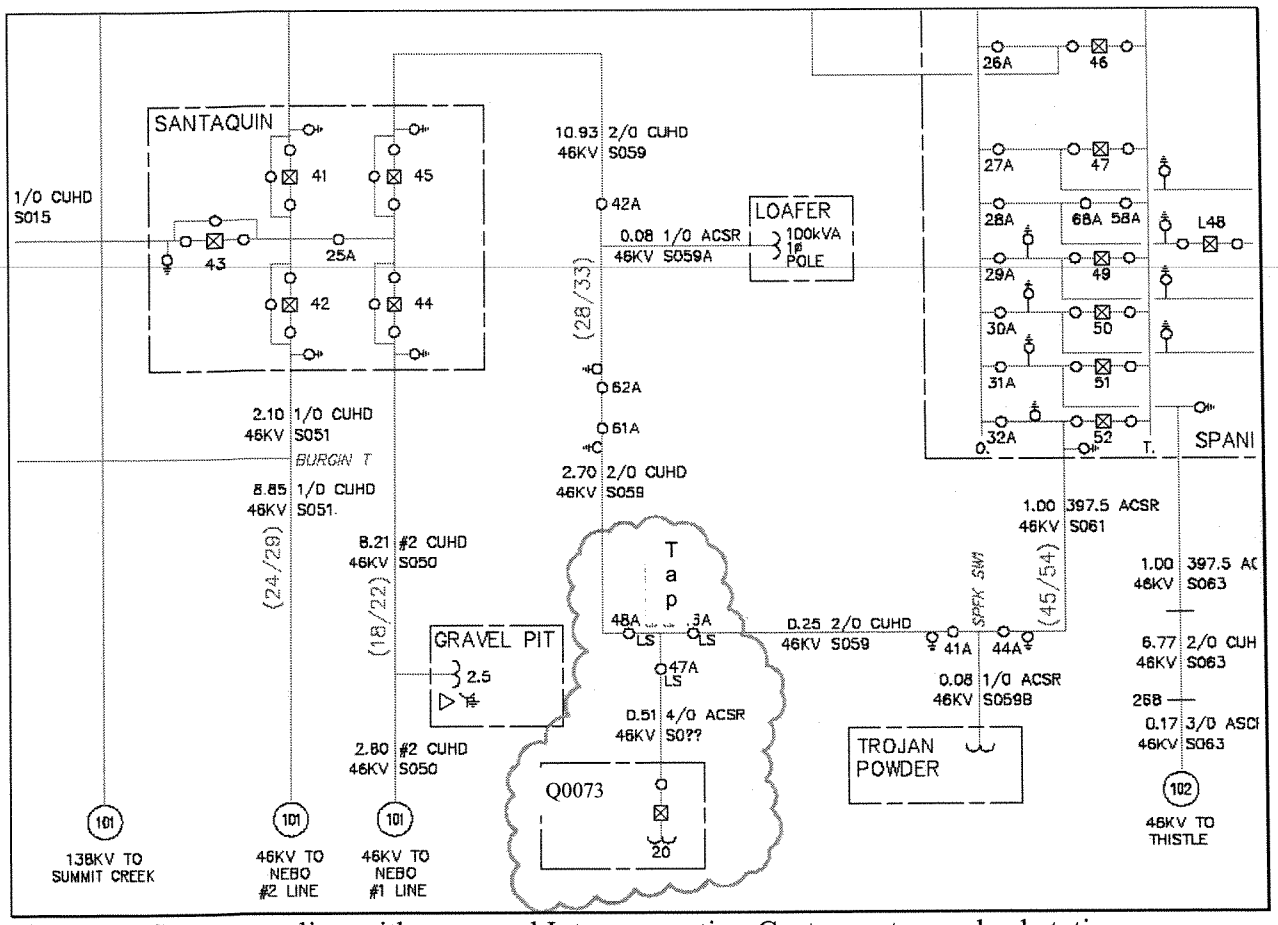

Figure 1 – System oneline with proposed Interconnection Customer tap and substation

5.0 Planning Study Results

5.1 Impacts Arising From Power Flows – Steady State Analysis

System in normal configuration - all lines in service. The output of the Interconnection Customer's generating facility is absorbed into the existing 46kV network without voltage or capacity issues. Under heavy loading conditions, approximately 89% of the output feeds south towards Santaquin substation, which feeds Transmission Provider's loads. The remaining output feeds north to Spanish Fork substation. Under light loading conditions, approximately 46% of the output feeds south towards Santaquin substation, with the remaining output feeding north to Spanish Fork substation.

The added generation during heavy loading can be completely utilized by Transmission Provider's 46kV loads on the 46kV network. The majority of the added generation under light loading will feed into Transmission Provider's 46kV load, but a portion (roughly 32%) will feed into SUVPS's (Southern Utah Valley Power System) 46 kV load at Spanish Fork.

The abrupt voltage change resulting from loss of the proposed generation is acceptable at 1.9%.

System in contingency (N-1) condition – specifically an outage of the Spanish Fork to Interconnection Customer tap 46kV line. This outage severs the strong tie to the Spanish Fork substation and leaves the Interconnection Customer generating facility tied to the remaining weak 46kV system. This remaining 46kV system is fed out of Nebo substation, 25 miles to the south, with two 46kV line connected to Sataquin substation. Due to the small size of conductor between the proposed Interconnection Customer tap and Santaquin substation, the output of the generation would drive the voltage up to an unacceptable level.

For this reason, the Generation would have to go off-line or curtailed during this outages. The abrupt voltage change resulting from loss of the proposed generation under this contingency is unacceptable at 13.1%.

Based on these contingency results, it is required that the Interconnection Customer's generation would go off-line during the following:

- During routine maintenance or outages of the circuit breaker at Spanish Fork that feeds the Spanish Fork – Interconnection Customer's tap – Santaquin 46kV line.
- During routine maintenance or outages of the Spanish Fork – Interconnection Customer's tap 46kV line section.
- During any unscheduled outages of the 46kV line between Spanish Fork and Interconnection Customer's tap

Historically, this line experiences around four outages per year and typical maintenance for both the transmission line and circuit breaker require a one or two day outage per year. These numbers are based on historical data and due to unknown future circumstances these outage estimates could be better or worse.

5.2 Impacts Arising From Power Flows – Dynamic Analysis

Due to the size of the project, and its close proximity to a strong voltage source, Transmission Provider chose not to perform a dynamic analysis. However, certain design requirements, discussed in Section 6.1.1, must be met for the Generating Facility.

5.3 Impacts arising from power delivery to the PacifiCorp network load

The 138-46kV transformers at Spanish Fork substation are owned by SUVPS. The power flow analysis shows that the generation would not reverse the power flow through the transformers. It would be absorbed locally in Transmission Provider and SUVPS 46 kV load.

6.0 Requirements, Cost, & Schedule

6.1 Requirements

6.1.1 Generating Facility Modifications

The wind turbines will be expected to meet the WECC Low Voltage Ride-Through (LVRT) requirements. Based on proximity to Spanish Fork substation (a primary power source in Utah County) and that the 46kV system is in normal operation, the generation may be operated in power factor control mode. Transmission Provider will require that the Generating Facility be designed to deliver power to the Point of Interconnection at unity power factor.

6.1.2 Transmission Modifications

At the point of interconnect the existing pole at the tap point will be replaced with a self-supporting 46kV steel pole. In addition, a 3-way 1200Amp manually operated switch with full load break attachments will be required.

The change of ownership will occur at the line side of the insulators, which feed south towards the proposed Interconnection Customer's site. Transmission Provider's ownership includes the new tap pole, the 3-way switch, the insulators and jumpers in all three directions.

An option to automate this 3-way switch will also be estimated. This will require (3) motor operators, controls, a communications tie to Spanish Fork, SCADA upgrades and service power.

The Interconnection Customer will own, install, operate and maintain the approximately 0.51 mile 46kV tap line between the interconnection point and their 46-34.5kV substation.

6.1.3 Existing Breaker Modifications – Short-Circuit

The increase in the fault duty on the system as a result of the addition of the generation facility with the 9 – 2.1MVA generators and the 20MVA step up transformers with 7.5% impedance will not push the fault duty above the interrupting rate of any of the existing fault interrupting equipment.

6.1.4 Protection Requirements

Transmission Provider will design and build a panel with protective relays that will be installed at the generation facility. In this protection package are relays designed to detect faults on the 46kV lines that connect the generation to Spanish Fork and Santaquin

Substations. The configuration of the interconnection is shown in the following one line diagram.

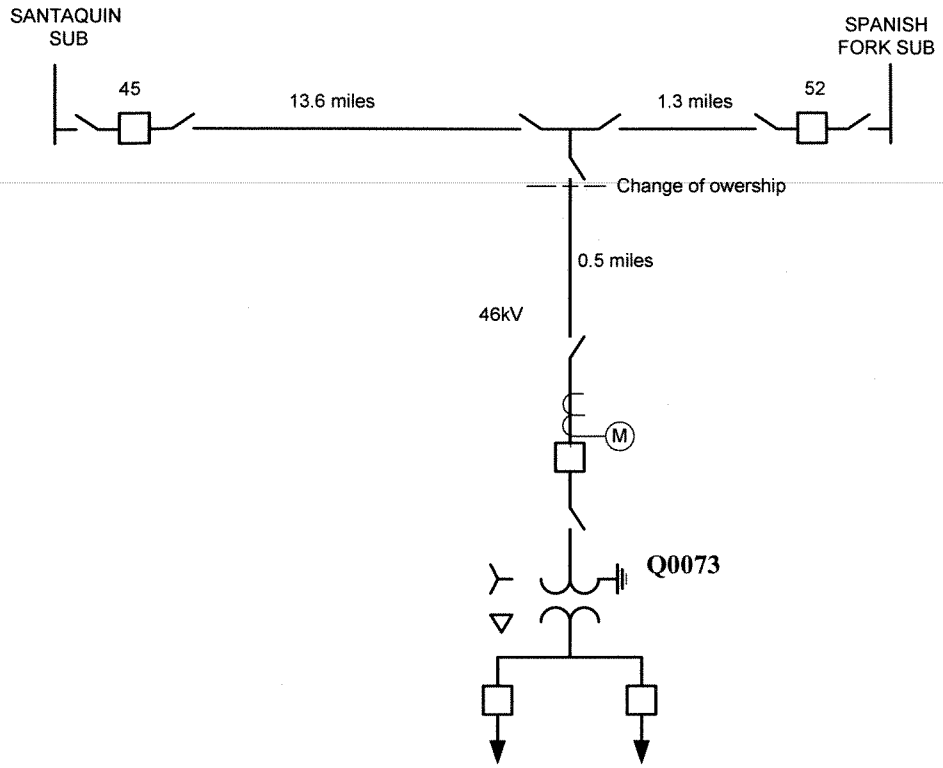

System 1 Line Diagram

Also installed in this panel will be a relay that monitors the voltage magnitude and frequency at the generation location. If the magnitude or frequency of the voltage is outside of normal range of operation on the 34.5kV circuit breakers at the plant, the collector station will need to be tripped.

It is our desire that the protective relays at the generation facility will disconnect the collector station from the 46kV circuit for any fault on the circuit before or at the same time as the relays at Spanish Fork or Santaquin Substations operate for those faults. Due to the strong source of Spanish Fork Sub and the proposed configuration of the interconnection it will not be feasible to configure the relays at the collector station to operate for faults near Santaquin Substation before the circuit breaker at Spanish Fork Substation operates.

As noted earlier in this document the weak system from Santaquin Substation will not be able to handle the output from the generation facility if the circuit breaker at Spanish Fork Substation is open. To address the fault clearing and the limitation of the system, a transfer trip communication circuit will need to be installed between Spanish Fork Sub and the collector station. Due to the relative short distance between the two facilities the installation of an optical fiber cable would be a good option. The optical cable will be

able to carry the transfer trip and the other data circuits that will be needed between the two facilities. Any time that the circuit breaker 52 at Spanish Fork Substation is tripped open, the 46kV breaker at the collector station will be tripped.
There will not be any communication to Santaquin Substation. For faults near the Santaquin Substation the circuit breaker 45 at Santaquin Substation will trip open before either the circuit breakers at Spanish Fork or the collector station will operate.

At Spanish Fork Substation a dead line checking will need to be added to block the automatic reclosing from closing the breaker if a failure of the protective systems leads to delayed tripping of the 46kV circuit breaker at the generation facility for a transmission line fault. To accomplish this, a line side voltage transformer on one phase will need to be installed along with a voltage relay and modification to the automatic reclosing circuitry. Also, at Spanish Fort Substation remote input/output devices that will communicate with the line relays at the collector station, will need to be installed to provide the sending units for the transfer trip.

At Santaquin Substation a synchronism check relay will need to be installed. Santaquin Substation is set up to automatic reclose after the Spanish Fork terminal closes. Since the line will normally be energized when the Santaquin Substation circuit breaker recloses; a dead line check installation will not work at that terminal. A line side voltage transformer on one phase will need to be installed along with the synchronism check relay and the modification of the automatic reclosing circuitry.

6.1.5 Data Requirements (RTU)

Data from the collector station will need to be fed into the Transmission Provider's SCADA to facilitate the operation of the transmission system. To accomplish this, a remote terminal unit (RTU) will be installed at the collector substation. The RTU will need to communicate with the Transmission Provider's SCADA master in Salt Lake City. The following data will be monitored by the RTU:

<u>Analogs:</u>

- Net Generation MW
- Net Generator MVAR
- Real Power output from the east 34.5kV collector circuit
- Reactive Power output from the east 34.5kV collector circuit
- Real Power output from the west 34.5kV collector circuit
- Reactive Power output from the west 34.5kV collector circuit
- Reactive Power output from the switched reactive source
- A phase 46kV voltage
- B phase 46kV voltage
- C phase 46kV voltage
- Wind Speed

Status:
- All 34.5 and 46kV circuit breakers
- Line relay trouble alarm

Accumulator Pulses:
- Interchange metering kWH

It was noted earlier in the document that remote control of the motor operated switches at the tap point to the generation facility could facilitate the restoration of the generation following an outage of the line between the tap point and Santaquin Substation. This could be accomplished with a remote I/O module that would communicate with the RTU at the collector substation over fibers in the optical cable. 120/240V AC will be required at the motor operated switch location to provide power for this remote I/O and fiber interface modules.

The interchange real power MW will need to be telemetered to the Transmission Provider's Alternate Energy Control Center at Sigurd Substation independent of the analog supplied to the RTU.

6.1.6 Electronic Communication Requirements

For Line Protection

Fiber optic cable between the collector substation and Spanish Fork Substation is required.

For Data Delivery to the Control Centers

Fiber terminals at Spanish Fork and Q0073 Substation, and a channel bank at Q0073 project will be required. A BITS clock will be installed that will synchronize the fiber system to the rest of the Transmission Provider digital communications system. In addition, channels will be required at Q0073, Spanish Fork, SCC, Lake Mountain, and Sigurd to transport the analog and RTU information to the main and alternate dispatch locations. Channels will also be required for voice and relay dial-up monitoring at Q0073.

6.1.7 Substation Requirements

No substation modifications are required under the recommended configuration.

6.1.8 Metering Requirements

Primary and backup metering is required on the high side of the step-up transformer which will meter the net generation. The metering instrument transformers shall be manufactured by Ritz and be a combination 46 kV CT/VT wye connected design. The primary meter will be used for standard retail sales and generation including SCADA MW, MVAR,

MWH and per phase voltage quantities. The second meter is required for telemetry MW and backup register data. The meters require a dial-up phone line for retail sales and transmission accounting via the MV-90 translation system. Expect at least 30 weeks delivery time for instrument transformers once the purchase order is completed. It is critical to order material well in advance of expected in-service time. Revenue quality combined CT/VT units with extended range CT's shall be used.

6.2 Cost Estimate

Self supporting steel pole, foundation, three-way switch	$312,000
Metering at plant	$71,000
Protection and Control Panel at plant	$96,000
SCADA at plant	$37,000
Protection and controls at Santaquin Substation	$20,000
Protection and Controls at Spanish Fork Substation	$19,000
Communications	$301,000
Total Interconnection Cost	**$856,000**

6.3 Schedule

It is estimated that it would take approximately nine months from the signing of a Small Generator Interconnection Agreement to engineer, procure, and construct the Transmission Provider's portion of this project. Note that this does not support the Interconnection Customer's requested in-service date of May, 2007 especially after taking in to consideration the time required to complete the facilities study.

7.0 Affected Systems

Transmission Provider will send a copy of this report to SUVPS for their review and comment.

8.0 Appendices

Figure 1 – Interconnection Customer site plan and interconnection point
Figure 2 – Interconnection Customer at full output, system under summer peak conditions
Figure 3 – Interconnection Customer at full output, system under light load conditions
Figure 4 – Interconnection Customer at full output, system under light load conditions. Outage of the Spanish Fork to Interconnection Customer tap 46kV line.
Figure 5 – Interconnection Customer at a maximum of **half** output, system under light load conditions. Outage of the Spanish Fork to Interconnection Customer tap 46kV line.

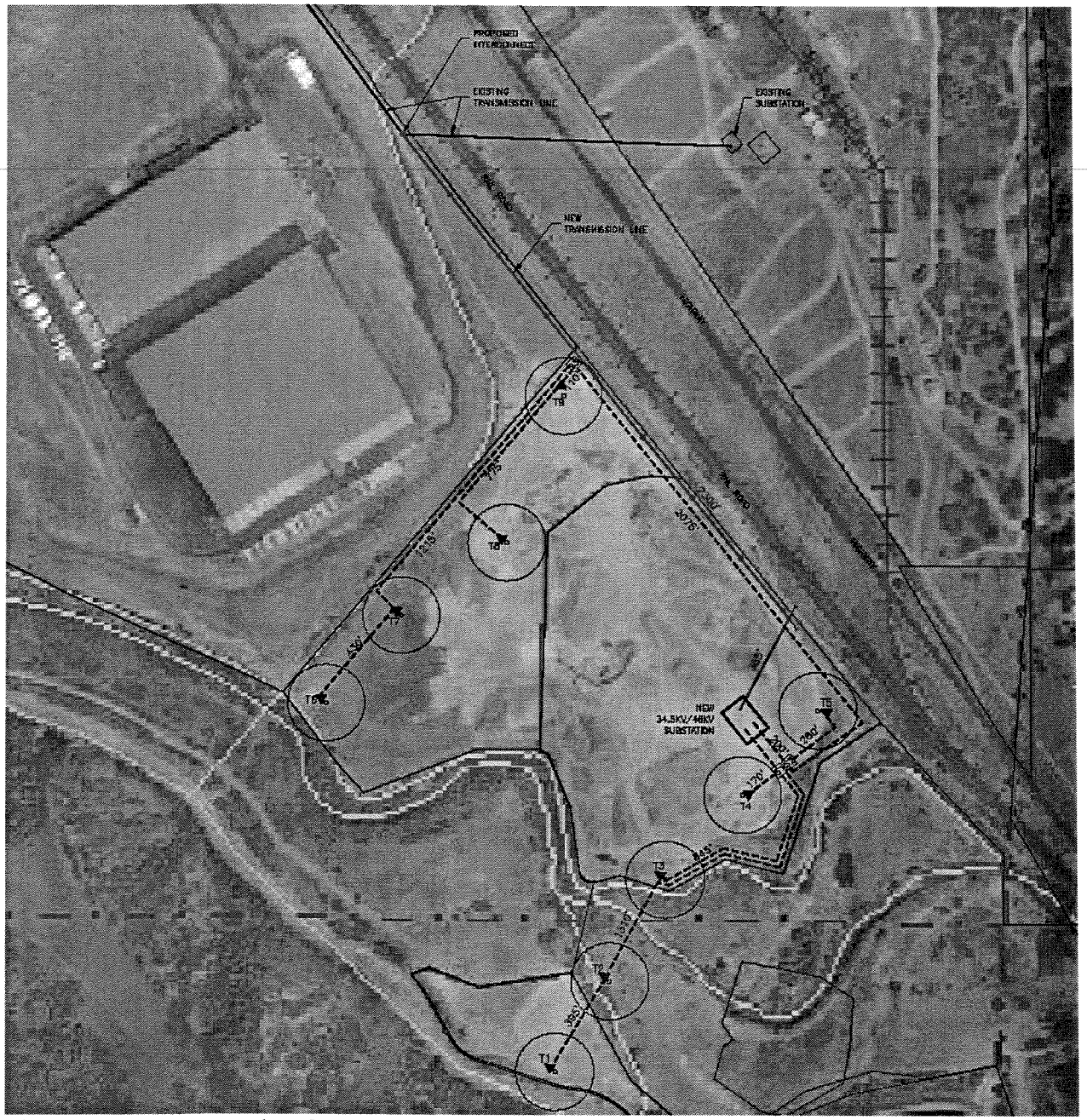

Figure 1 – Interconnection Customer site plan and interconnection point

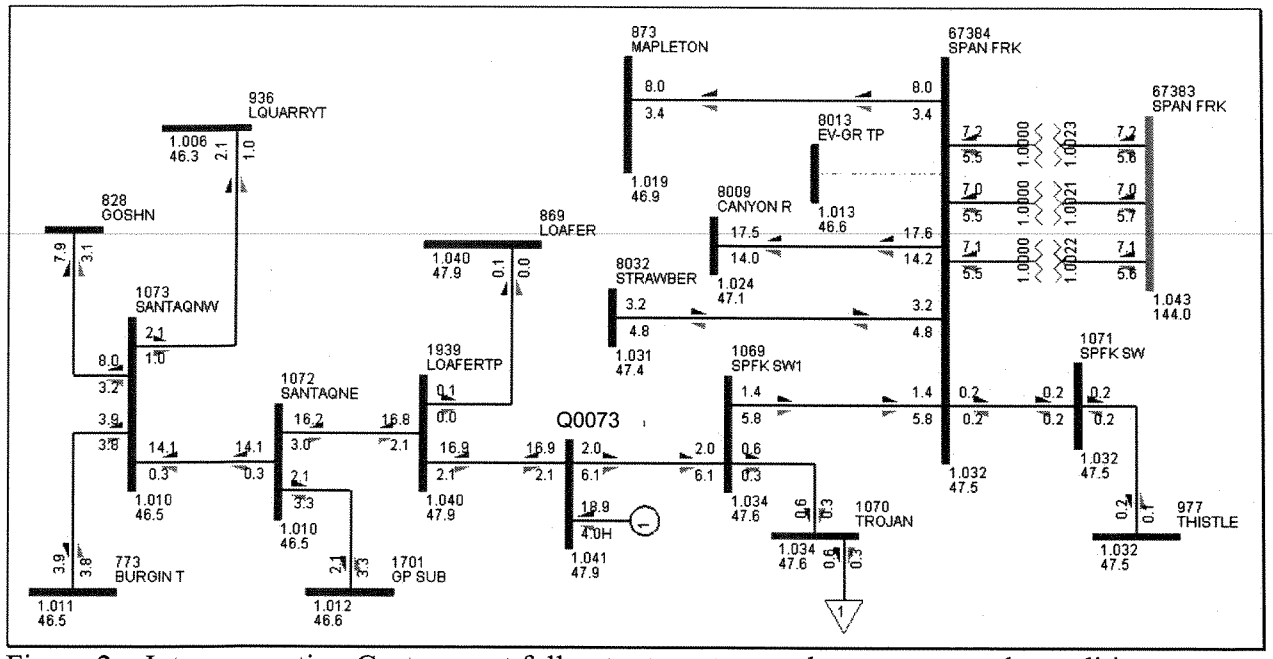

Figure 2 – Interconnection Customer at full output, system under summer peak conditions

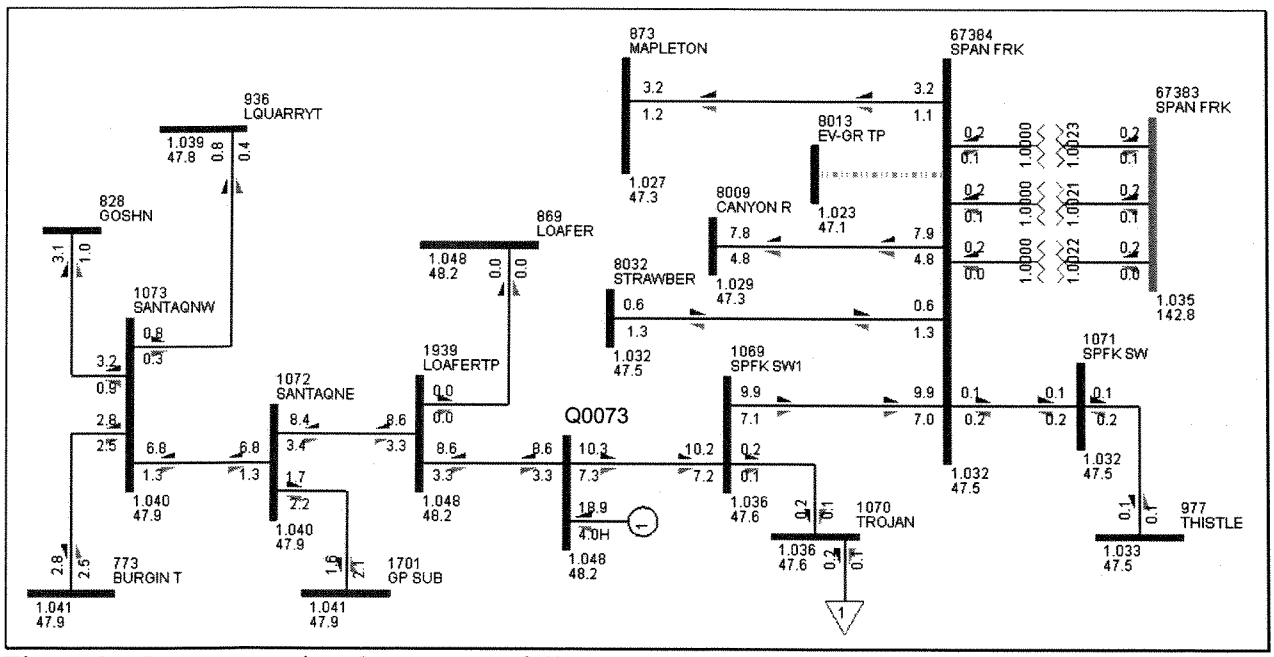

Figure 3 – Interconnection Customer at full output, system under light load conditions

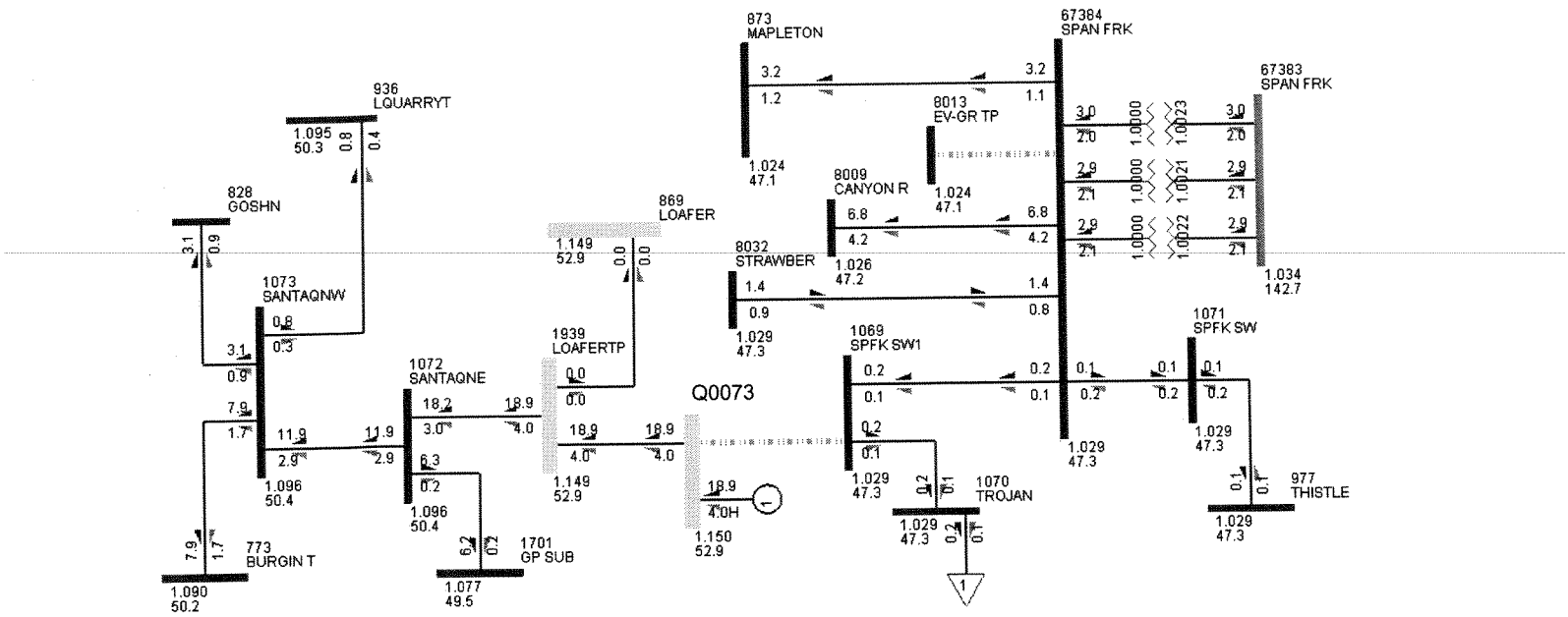

Figure 4 – Interconnection Customer at full output, system under light load conditions. Outage of the Spanish Fork to Interconnection Customer tap 46kV line. This results in system overvoltage.

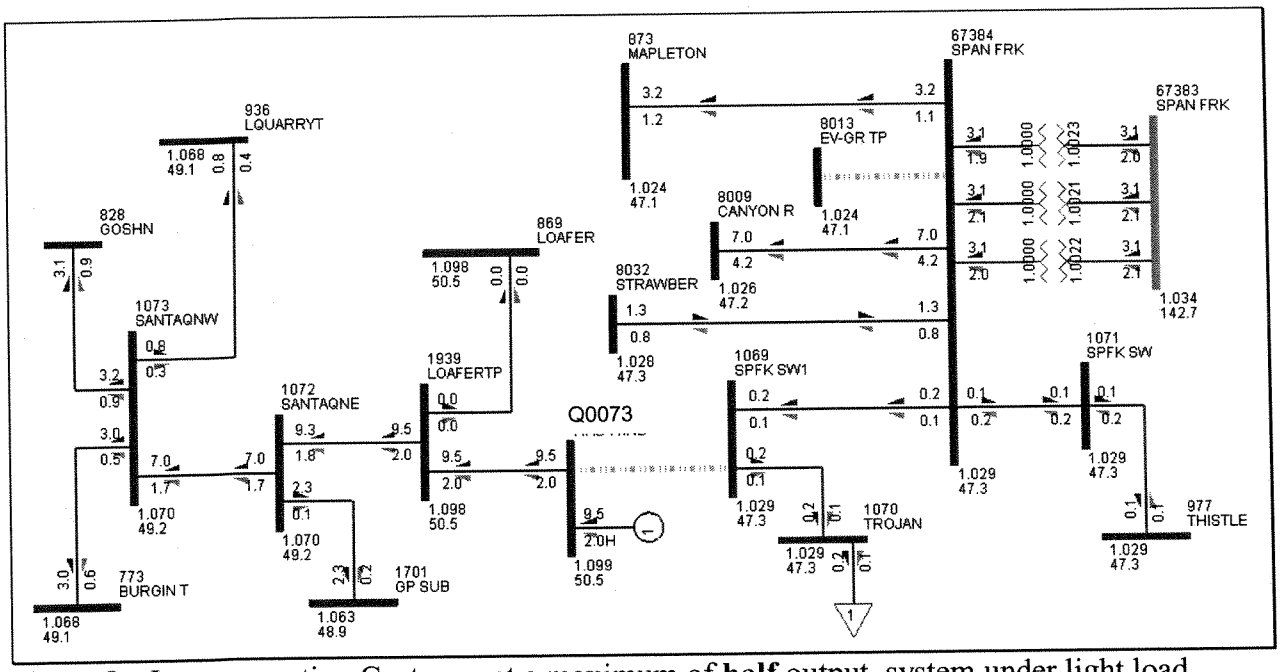

Figure 5 – Interconnection Customer at a maximum of **half** output, system under light load conditions. Outage of the Spanish Fork to Interconnection Customer tap 46kV line. Marginally high system voltage.