PACIFICORP
A MIDAMERICAN ENERGY HOLDINGS COMPANY

Large Generator Interconnection
Feasibility Study Report
Revision 1.0

Completed for
Q0071
A Qualifying Facility (QF)

Proposed Interconnection
34.5-kV Boeing or Simtag Feeders
at Dalreed Substation
in Morrow County, Oregon

July 31, 2006

TABLE OF CONTENTS

1.0 DESCRIPTION OF THE GENERATING FACILITY

Q0071 ("Interconnection Customer") has requested that PacifiCorp ("Transmission Provider") study the proposed interconnection of 10 MW of wind powered generation in Morrow County, Oregon. This project ("Project"), which is located just west of Boardman, Oregon and approximately five miles from Transmission Provider's Willow Creek substation, consists of six 1.65-MW Vestas V82 wind turbines. The facility will connect to the Transmission Provider's distribution system at either its 34.5 kV Boeing Feeder or Simtag Feeder, both out of Transmission Provider's existing Dalreed Substation. The requested in-service date is February 1, 2007.

2.0 SCOPE OF THE STUDY

The feasibility study ("Study") report ("Report") shall provide the following analyses for the purpose of identifying any potential adverse system impacts that would result from the interconnection of the Small Generating Facility as proposed:

- Initial identification of any circuit breaker short circuit capability limits exceeded as a result of the interconnection;
- Initial identification of any thermal overload or voltage limit violations resulting from the interconnection;
- Initial review of grounding requirements and electric system protection; and
- Description and non-binding estimated cost of facilities required to interconnect the proposed Small Generating Facility and to address the identified short circuit and power flow issues.

3.0 DESCRIPTION OF PROPOSED INTERCONNECTION

The designated point of interconnection to the Transmission Provider's distribution system is on the 34.5 kV Dalreed Simtag Feeder, in Morrow County, Oregon. A tap line will be built from a location near the existing Simtag Booster Substation to the collector station for the Interconnection Customer's generation facility. Figure 1 is a one-line diagram that illustrates the proposed interconnection.

Initial planning studies indicate that electrically, the Simtag Feeder is the better option for the point of interconnection. The selection of the Simtag Feeder is based primarily on the fact that, at this time, another higher queued generation interconnection request ("Q0055") is considering interconnection on the Boeing feeder.

Q0055 is a synchronous generator, roughly the same size as Interconnection Customer's interconnection request. Interconnection Customer's proposal is for wind turbine induction

generators. The existing circuits in this area are 34.5-kV and, therefore, have an ultimate capacity of 24 MVA. Generally it is advisable from a sizing standpoint to have no more than one-third of this capacity allocated to generation.

If it is larger, stability issues may become an issue and can make the routine operation of the circuit unstable due to voltage unbalance and rise, as well as, frequency variations that occur because of the combination of induction and synchronous generators operating at the same time on the same circuit. This significantly complicates the protection and relaying scheme that is already in place to protect existing customers.

Relaying and protection devices with a combination of induction and synchronous units of this large size also introduce complex fault currents originating from both generating sources as well as the normal sources of the substation and circuit. This issue alone significantly complicates the scheme to protect the circuit from typical faults and incidents. The proposed addition of 10 MWs to the closest feeder (Boeing Feeder 4K46), will make the maximum generation capacity on this circuit 20 MWs which is about 50% of the capacity of the feeder, which is well in excess of the typical capacity for generation for a distribution feeder. For these reasons, it was decided that it would be necessary to place this project a different feeder than the higher queued request. Therefore, the remainder of the Study will focus on the interconnection with the Simtag Feeder.

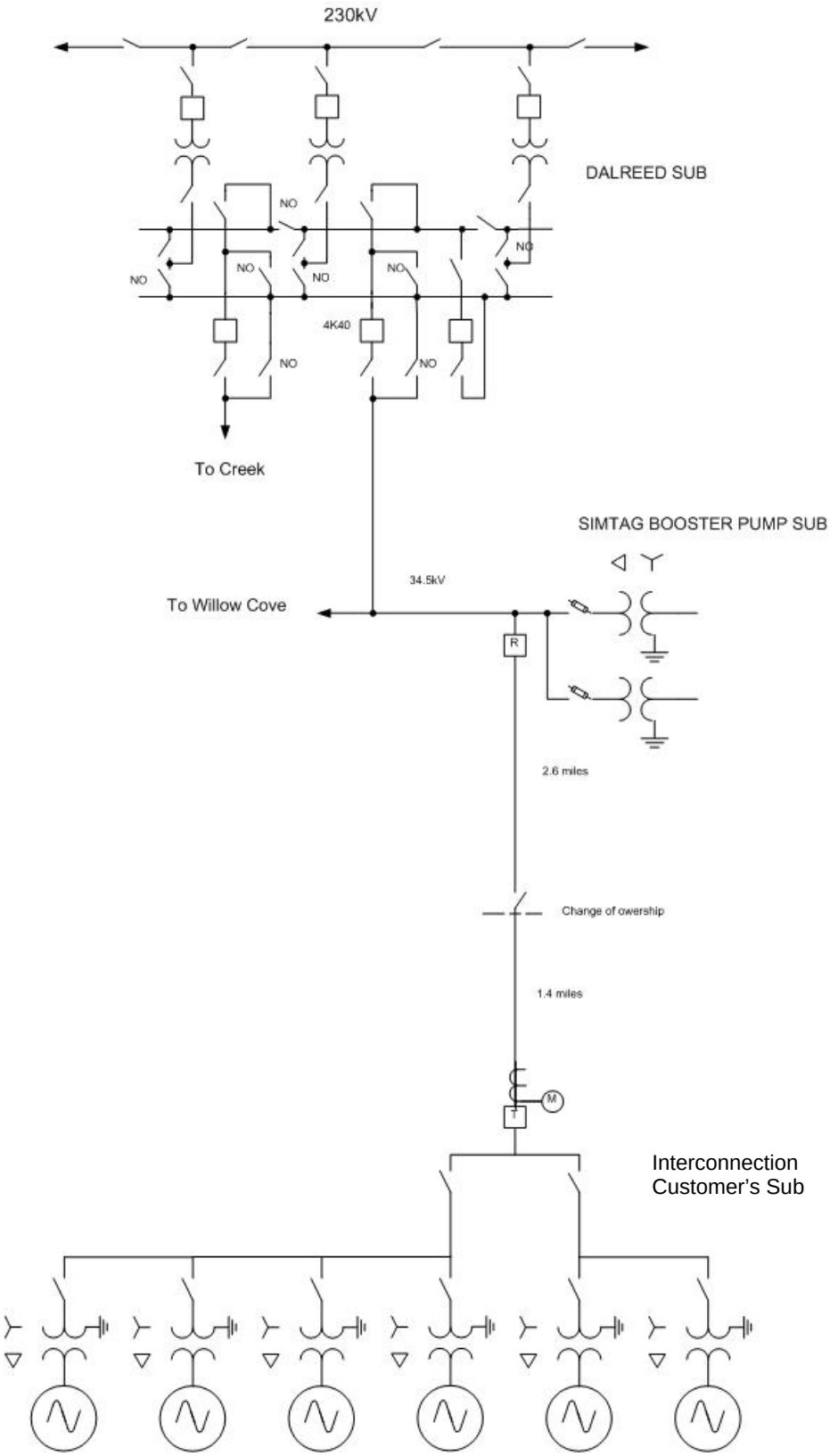

***Figure 1**: One-line Diagram of Proposed Interconnection*

4.0 TYPE OF SERVICE

This is a Qualifying Facility (QF) Small Generator Interconnection Request.

5.0 STUDY RESULTS

5.1 Requirements

5.1.1 Generating Facility Modifications

Transmission Provider will require that Interconnection Customer design, procure, and install equipment sufficient to deliver power within a power factor range of +/- 95% at the point of interconnection (Simtag Substation). The reactive output must be controlled by sensing voltage at the point of interconnection. The wind turbines, or the generating facility, must be capable of providing sufficient dynamic voltage support similar to that provided by an excitation system of a synchronous machine. Transmission Provider requires that the wind turbines be capable of meeting the Western Electricity Coordinating Council low voltage ride through requirements. Additionally, Transmission Provider requires that the generating facility be capable of riding through the following high voltage swings:

- for voltages less than or equal to 1.1 pu, the wind turbine units must stay on indefinitely;
- for voltages less than or equal to 1.15 pu the wind turbine units can trip after a 1.0 second delay;
- for voltages less than or equal to 1.2 pu the wind turbines can trip after a 0.3 second delay; and
- for voltages greater than 1.2 pu the wind turbines can trip instantaneously.

5.1.2 Distribution Modifications

Installation of approximately 4 miles of overhead conductor (sized at 477 AAC) will be required on the Simtag 4K40 feeder out of Dalreed Substation starting at Feederall node 183 working down to the wind turbines. The Transmission Provider will own the approximate 2.6-mile segment from the Simtag Substation to the point where the feeder extension crosses the existing Boeing feeder. A switch will be installed on the Transmission Provider's side of this point of change of ownership.

The transformer installed at each wind turbine site will be a grounded wye – delta configuration with the wye on the primary side (high voltage) and the delta on the secondary side (low voltage). This non-standard transformation (grounded wye–grounded wye is standard for Transmission Provider) shall have a means to connect and/or disconnect all phases of the primary distribution system simultaneously. This device shall have control and settings to provide for completely disconnecting the transformer from the distribution system for loss of any phase from the utility source (Dalreed Substation) as well as faults internal to the Interconnection

Customer's generating facility which are not cleared by other means. An analysis was performed to determine if voltage dips would exceed the Transmission Provider's allowed guideline, should the generating facility become abruptly disconnected. A 5-volt voltage difference was calculated, which was within the 6-volt tolerance (on a 120-volt basis).

Voltage flicker can be an issue with wind turbines on distribution systems. The fewer the number of turbines and the skinnier and longer the wire they are connected to, the more likely it is that voltage flicker becomes an issue. At the present time, there is not enough data to determine if this project will have a voltage flicker issue. The Interconnection Customer must provide flicker performance information for the Vestas V82 wind turbines to ensure that the wind turbines will not contribute to unacceptable voltage performance, prior to the commencement of the System Impact Study.

5.1.3 Existing Breaker Modifications – Short-Circuit

Since wind turbine-related impedances were not provided by the Interconnection Customer, a short circuit analysis was not performed. This analysis will be delayed until the System Impact Study. The Interconnection Customer must provide the missing impedances prior to the commencement of the System Impact Study.

5.1.4 Protection Requirements

The protection on this system will need to disconnect the generating facility from the feeder for any fault on the 34.50-kV feeder before or at the same time as the relays on circuit breaker 4K40 at Dalreed Substation operate for those faults. The generating facility will also need to disconnect from the system for faults on the 230-kV lines feeding Dalreed Substation. To accomplish this, the following will be required:

- A protective relay at the generating facility looking into the 34.5-kV system. This relay will need to contain phase distance elements to detect phase faults on the 34.5- and 230-kV systems, with different numbers of generators operating, and still not cause a trip at the maximum generation output of the plant.

- A three-phase set of 230-kV potential devices will need to be installed on the 230-kV bus at Dalreed Substation. The secondaries of these 230-kV potential devices will be connected in a broken delta configuration and connected to an overvoltage relay. This relay will detect single line to ground faults on the 230-kV system. With the transformer configuration at Dalreed Substation, single line to ground faults on the 230-kV system will not be sensed on the 34.5-kV side after the 230-kV breakers at the remote ends of the line open. The generators must be disconnected before the automatic reclosing of the 230-kV breakers, to allow a successful reclose and to prevent potential damage to the generators. If Q0055, a higher priority interconnection request, becomes operational then these same facilities will already be installed.

- A transfer trip communication circuit will be needed between Dalreed Substation and the generation facility. When the overvoltage relay detects a fault on the 230-kV system a trip signal will be sent to the generating facility over the transfer trip circuit to disconnect the generators. The transfer trip will also be keyed if the circuit breaker 4K40 at Dalreed Substation is opened.

- Also, a relay that monitors the voltage magnitude and frequency at the point of interconnection will need to be installed at the generating facility. If the magnitude or frequency of the voltage is outside of the acceptable range of operation, the generators will need to be disconnected from the 34.5-kV system. This relay will need three levels of overvoltage pickup, three levels of undervoltage pickup, two levels of overfrequency pickup, and two levels of underfrequency pickup. Each of these levels will need separate time delays.

- The Transmission Provider will design and construct a panel to be installed in the generating facility that will provide the line fault detection, receipt of transfer trip, and the out-of-acceptable voltage magnitude and frequency relay functions. This panel is to be installed by Interconnection Customer.

- The fault detecting relay, the receipt of the transfer trip, and the out-of-acceptable voltage magnitude and frequency relay can trip open circuit breaker "T".

- To minimize the impact the additional exposure of the approximate four miles of line that will be tapped off the existing 34.5-kV system near Simtag Booster Substation a re-closer will be installed in the tap line. This is device "R" on Figure 1. The re-closer will operate for faults on the new tap line and not for faults on the existing 34.5-kV system. To accomplish this, it is assumed at this time that the overcurrent relays on the re-closer will need to be directional. Once the impedances for the generators are received it might be determined that the directional relay will not be needed. This would permit the use a more commonly used device. The relays at the generation facility will be set to operate for all faults on the Simtag feeder. The re-closer will automatically re-close after a 15-second time delay if the line to the generating facility is dead. This will facilitate the restoration of the generation after a temporary fault.

- Normally the Simtag feeder out of Dalreed Substation is connected to a parallel combination of two 230 – 34.5-kV transformers at Dalreed Substation. The other feeder is connected to a different transformer. However, if equipment is out of service for maintenance or as a result of failure the two feeders at Dalreed Substation will be fed off the same 34.5-kV bus. A fault on the 34.5-kV bus or on the Boeing feeder will produce currents flowing through circuit breaker 4K40 from the generation facility in excess of the overcurrent relay pickups applied to circuit breaker 4K40. It will not be acceptable to have circuit breaker 4K40 trip open for these fault conditions. To prevent this mis-coordination the settings on the existing relay will be modified to make the relay directional.

- Dead line checking will need to be added to block the automatic reclosing of circuit breaker 4K40 at Dalreed Substation if a failure of the protective systems leads to delayed tripping of the generation facility for a feeder fault. Re-closing for this type of situation could cause damage to the equipment and needs to be prevented. To accomplish this a three-phase set of voltage transformers will need to be installed; connected to the line side of circuit breaker 4K40. The secondaries of these voltage transformers will connect to the feeder protection relay to block auto reclosing if the line is energized.

- Under light load conditions the power from the power plant will flow back into the 230-kV bus at Dalreed Substation. The controllers on the load tap changers (LTC) on transformer banks 1 and 3 at Dalreed Substation will need to be reset to function correctly in the condition of the reversed power flow.

5.1.5 Data Requirements (RTU)

A remote terminal unit (RTU), reporting back to Transmission Provider's Energy Control Center in Portland, will be required at the Generation Facility. With this RTU Transmission Provider will monitor the following:

Analogs:
- Collector line 1 MW
- Collector line 1 MVAR
- Collector line 2 MW
- Collector line 2 MVAR
- Net generation metering MW
- Net generation metering MVAR
- MVARs from any fixed or switched capacitor bank
- 34.5-kV A phase voltage
- 34.5-kV B phase voltage
- 34.5-kV C phase voltage

Status:
- Collector line 1 breaker
- Collector line 2 breaker
- Switched capacitor bank switch
- 34.5-kV Tie breaker

Accumulator Pulses:
- Net generation meeting kWh

The net generation real power megawatts will need to be telemetered to the Transmission Provider's Energy Control Center in Portland independent of the analog supplied to the RTU.

5.1.6 Metering Requirements

Transmission Provider requires telemetry equipment be installed at all generating facilities connected to its circuits that are greater than or equal to three megawatts. This is to allow its dispatch personnel at its Portland dispatch center to keep tabs of their operational status and power output for use in the daily dispatching activities of Transmission Provider's power system. Telemetry equipment will be installed at a location determined by Transmission Provider's local operations employees. This location will be at a point which is considered to be owned and operated by Transmission Provider and not within the Interconnection Customer's premises.

The revenue metering shall be located on the line side of the breaker "T" at the generating facility, and shall be a standard main/backup interchange metering package with signal transfer switches to allow continued telemetry during routing maintenance on the metering. The main/backup meters will supply analogs for signals for voltages and energy as outlined above. The metering shall be placed so that measurement of net generation is accomplished: gross generation minus generator station service. In addition, the meters shall be connected with a dialup phone line for communications with Transmission Provider's MV90 system which maintains data of generation and usage for Commercial and Trading Back Office Group. The standard meter package is diagrammed below:

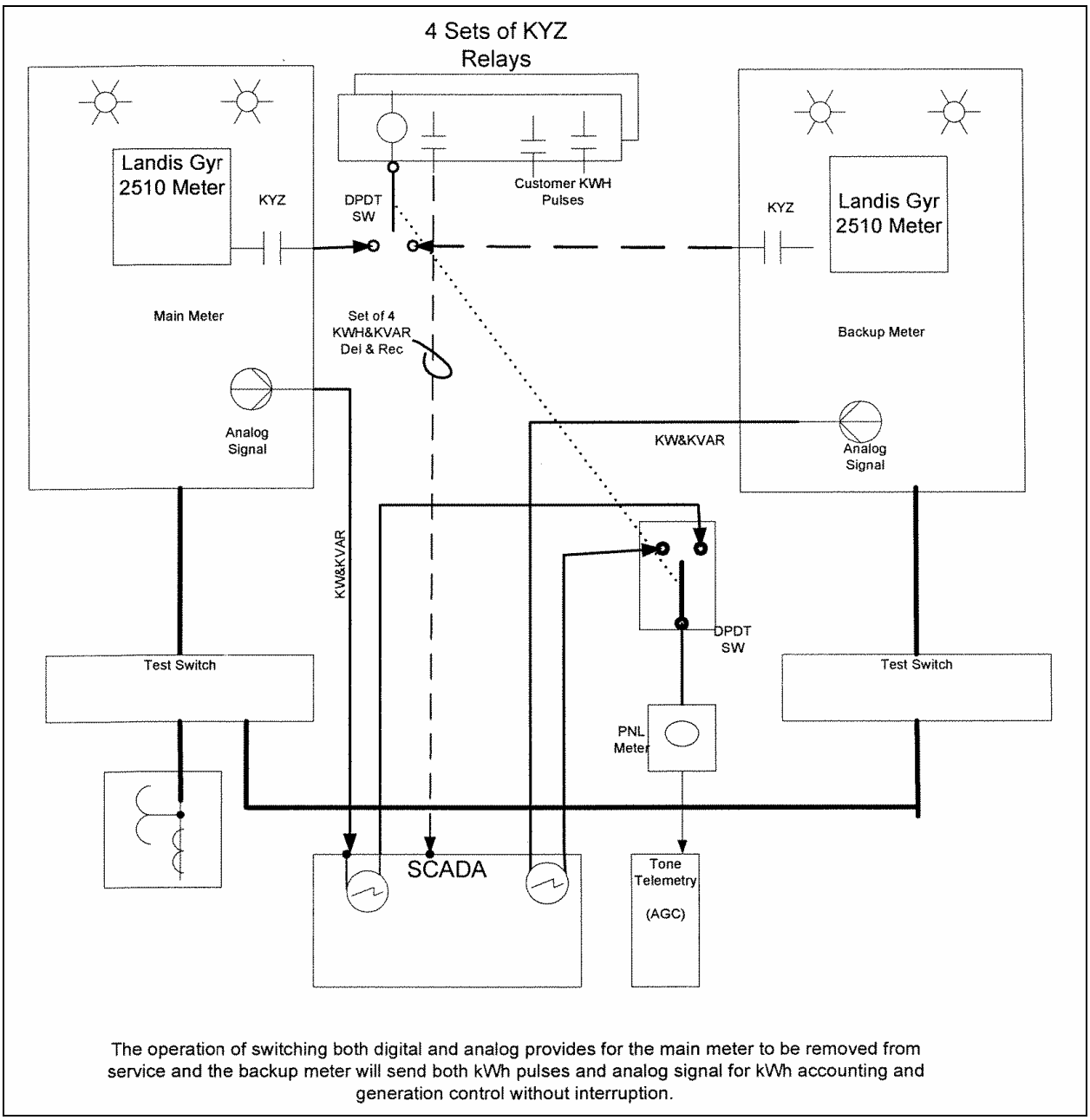

***Figure 2**: Standard Interchange Metering*
Switched Digital & Analog

5.1.7 Communication Requirements

The protective relaying circuit between the generating facility and Dalreed Substation will be placed on single-mode fiber a distance of approximately 5.3 miles. If the higher queued project in the vicinity is built then only 1.4 miles of fiber will required to connect to the fiber that that project is installing. The fiber will be terminated in patch panels. One pair of fibers will be used for direct communication between the relays. Another pair will be used for channel banks which will carry SCADA, telemetry, and dial-up circuits out of the generating facility into

Transmission Provider's system. A third communication alternative is implementation of a Fractional T1 microwave radio from the generating facility to Dalreed, in lieu of fiber. At Dalreed, the SCADA and telemetry circuits will be bridged to existing circuits out of Dalreed onto Transmission Provider's existing microwave system. The dial-up circuit will be cross-connected to a telco lease to the local CO at Dalreed Substation. GPR protection equipment will be required there. A Gauntlet Line Sharing Switch will be installed at the generating facility for secure dial-up communications to phone, meters, and relays.

5.2 Cost Estimate

	Fiber, with higher queued project	Fiber, without higher queued project	Microwave, without higher queued project*
4 miles of overhead conductor (sized at 477 AAC)	$470,000	$470,000	$470,000
230 kV protection at Dalreed		$30,000	$30,000
line recloser	$40,000	$40,000	$40,000
Reprogram or replace existing metering at Dalreed sub	$11,000	$11,000	$11,000
manual disconnect switch	$8,000	$8,000	$8,000
metering	$50,000	$50,000	$50,000
Communications**	$210,000	$369,300	$245,000
Total	**$789,000**	**$978,300**	**$854,000**

*This estimate assumes line of sight is available.
**Does not included lease of telephone circuit

5.3 Schedule

The total time to complete construction, from the signing of an Interconnection Agreement is estimated to be 40 weeks.

6.0 CONCLUSIONS

To facilitate interconnecting the Interconnection Customer's generating facility to the Transmission Provider's existing 34.5-kV feeder from its Dalreed Substation to its Simtag Substation, an approximate four mile extension of the feeder will be required beyond Simtag. The Feeder will include a fiber path from the generating facility to Dalreed. Additionally, protection and other communications additions will be required on Transmission Provider's system.

7.0 PARTICIPATION BY AFFECTED SYSTEMS

No Affected Systems were identified in relation to this Interconnection Request.