PACIFICORP
A MIDAMERICAN ENERGY HOLDINGS COMPANY

Large Generator Interconnection
Feasibility Study Report

Completed for
Q0063/64
Phases 1 & 2
Interconnection Requests

Proposed Interconnection
Near PacifiCorp's Existing
Mile Hi – Alturas,
115 kV Transmission Line

April 25, 2006

TABLE OF CONTENTS

1.0 DESCRIPTION OF THE GENERATING FACILITY

Q0063/64 ("Interconnection Customer") has proposed interconnecting a new generating facility ("Project") with PacifiCorp's ("Transmission Provider") existing Mile Hi – Alturas, 115-kV Transmission Line in Lake County, Oregon. The generation project proposed for study entails a total of 100 MW of wind turbine generation to be located at South Warner Rim, approximately 25 miles east of Lakeview, Oregon. The development will occur in two phases of 50 MW each. Each phase consists of twenty-five 2-MW wind units connected to a central substation through a 34.5-kV network. For each phase, a 34.5-kV to 115-kV, 30/37/50 MVA step-up autotransformer will deliver the power to a common 25 mile single circuit 115 kV radial transmission line connecting the Generating Facility to the Point of Interconnection. The requested commercial operation date for the first phase of the Project ("Phase 1") is December 31, 2008. The requested commercial operation date for the second phase of the Project ("Phase 2") is June 30, 2009.

2.0 SCOPE OF THE STUDY

The Interconnection Feasibility Study ("Study") report ("Report") shall provide the following information:

- preliminary identification of any circuit breaker short circuit capability limits exceeded as a result of the interconnection;
- preliminary identification of any thermal overload or voltage limit violations resulting from the interconnection; and
- preliminary description and non-binding estimated cost of facilities required to interconnect the Large Generating Facility to the Transmission System and to address the identified short circuit and power flow issues.

3.0 TYPE OF INTERCONNECTION SERVICE

The Interconnection Customer has selected *Network Resource (NR)* Interconnection Service, but has also elected to have the interconnection studied as an *Energy Resource (ER).* The customer will select NR or ER prior to the Facilities Study.

4.0 DESCRIPTION OF PROPOSED INTERCONNECTION

The point of interconnection with the Transmission Provider's system is proposed as the Mile Hi – Alturas, 115-kV Line (also known as Line 36) near the Mile Hi- end of the line. A 25-mile long 115-kV H-frame transmission line constructed with 795-ACSR conductor to the

Interconnection Customer's central substation would be designed, constructed, owned, and operated by Interconnection Customer.

A three-breaker ring bus configuration will be used at the Point of Interconnection.

5.0 STUDY ASSUMPTIONS

For study purposes, the point of interconnection is assumed to be 2 miles south of Mile-High substation on Line 36. The Interconnection Customer's central substation would include a 30/37/50 MVA rated step-up autotransformer for each phase of the Project. The Phase 1 and Phase 2 step-up transformer impedances are each 8.5%.

The study includes updating and extending the detail power flow models for the Lakeview area 115-kV and 69-kV sub-transmission system, with representation of the full WECC system. The interconnection point, developer's 115-kV transmission line, and substation are represented in the model. The wind generating units are lumped into a single representative machine at the central substation.

Cases representing both heavy summer and light loading conditions were utilized to identify the worst case conditions. The BPA schedule from Hill Top to Border Town was analyzed for interaction with the proposed wind project. Analysis of the system voltage sensitivity to variation in wind generation output for various operating configurations and loading conditions is included.

A dynamic stability analysis of the system with the wind generation added is not included in the scope of this feasibility study. A detail design of the wind generation equipment and configuration will be required in the System Impact Study. There is a large amount of motor load in the area driving irrigation pumps, under summer conditions. A possibility may exist for undesired interaction between these rotating machines and the wind generating units if the generation design does not address this.

Numerous power flow cases were constructed and utilized to identify the operating characteristics of the wind generating equipment and the transmission system for all identifiable worst case conditions and system configurations. Cases for both heavy summer peak load and minimum light load conditions were evaluated. (Winter peak load conditions are less restrictive for this summer peaking system.)

Analysis was performed for system normal configuration and for the most likely contingency cases where a system component is out of service for maintenance or due to failure, including the BPA Warner and Chiloquin transformers supplying the 115-kV system under study.

A sensitivity analysis of the system response to variation in the wind generation was run for all probable system configurations.

6.0 PHASE 1 – 50 MW

6.1 Energy Resource (ER) Interconnection Service

6.1.1 Study Results

Results of the system normal configuration analysis indicate that varying the generation output while holding all non-generating controls locked (switched shunt capacitors and transformer taps) results in a system voltage variation of about 2% at the interconnection point. This is considered acceptable.

Under system normal conditions at heavy load, the power produced by the generation splits with about 25% moving toward Chiloquin (north) and 75% toward BPA Warner (south). Under light load conditions with no schedule to Border Town, the split is about 40% toward Chiloquin and 60% toward Warner. Under light load and full schedule the split is 20% toward Chiloquin and 80% toward Warner. The split is heavily affected by the BPA schedule to Border Town. This characteristic may affect contractual path calculations. Variation of the scheduled flow to Border Town does not significantly affect the Project's generation output or local sub-transmission voltages affected by the Interconnection Customer's generation.

Loss of the Warner transformer (or affiliated lines) results in the most difficult situation for system voltage management at either peak or light load conditions. A number of switched shunt capacitors are installed in the system for this contingency. Voltage regulation at the Interconnection Customer's central substation permits operation under this system configuration without causing intolerable voltage variation, including for the full generation trip condition.

A sensitivity analysis was run to determine the relationship between wind generation output variation and control of the schedule on the Border Town phase shifter. A 50-MW variation in wind generation output results in a 5-MW variation of the 265-MW flow to Border Town, with no control setting changes. This is considered acceptable, although the affected parties should be notified and given an opportunity to assess the impact if the wind generation proposal advances to the implementation stage.

Selecting a point of interconnection on the Chiloquin (west) side of Mile-Hi Substation instead of the proposed location, would require a different study and would significantly impact the project costs. The 397.5-ACSR conductor between Chiloquin and Mile Hi is rated for 100 MVA summer, and could be overloaded by interconnection at this location. (Load at Mile-Hi prevents this problem with the proposed interconnection point.)

The Transmission Provider's existing 115-kV system in the Lakeview area is capable of accommodating the proposed 50 MW of wind generation, when the power is delivered into Transmission Provider's load, from the proposed point of interconnection, with reasonable upgrades and proper controls and equipment on the wind generation project.

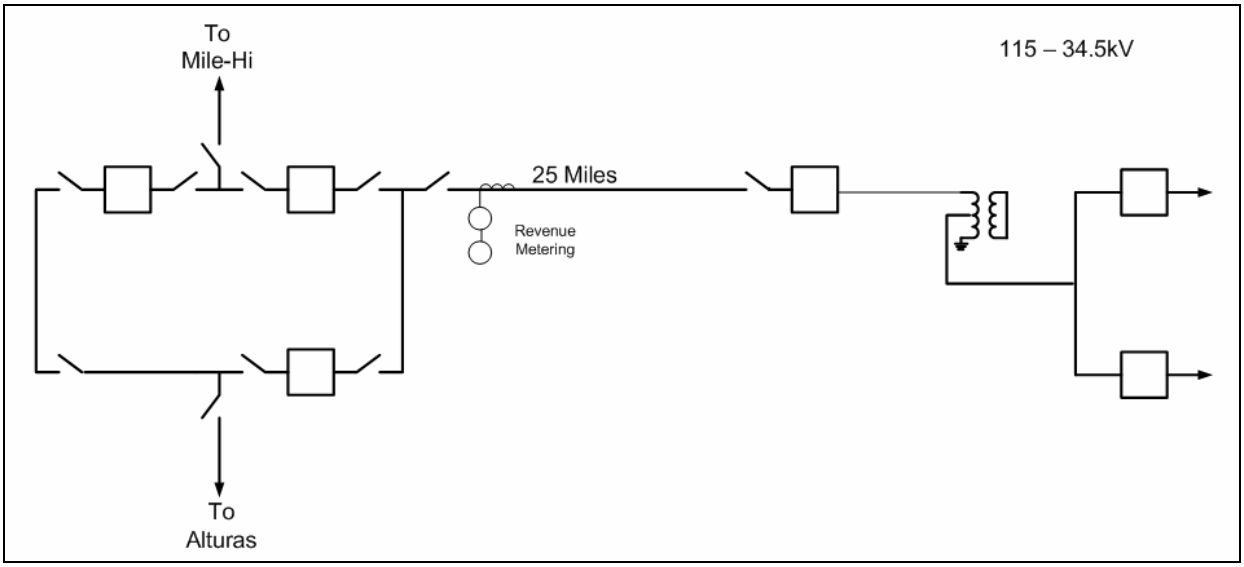

6.1.2 Requirements

6.1.2.1 Generating Facility Modifications

The developer is to design and construct a 25-mile 115-kV transmission line from the interconnection point substation to the Interconnection Customer's central substation. The Interconnection Customer's generation facility must incorporate a means of automatically regulating voltage at the central substation by varying the VAR flow to and from the transmission system within a range of +/-95% power factor at the interconnection point. Power flow results indicate that drawing VARS from the transmission system about equal to the reactive losses in the Project's transmission line will be required, for most operating conditions.

Without voltage regulation at the generation step-up substation, the system voltage variation could be over 10% for some conditions and would be considered unacceptable. By designing the generating facility to vary the reactive power drawn from the system to maintain a steady voltage at the central substation, the transmission system voltages remain well with bounds for all identified operating conditions. The full generation trip condition does not result in unacceptable distribution bus voltages at Transmission Provider's substations if such voltage regulation is incorporated in the design.

The generating facility must meet the Federal Energy Regulatory Commission's Order 661 low voltage ride through requirements, and is expected to be capable of providing dynamic voltage support (similar to that provided by a synchronous machine's excitation system).

6.1.2.2

Transmission Modifications

A conventional three breaker ring bus switching station would be constructed on newly purchased land at the point of interconnection, assumed to be about 2 miles south of Mile Hi.

Two dead end structures would be required to loop in the existing transmission line – Line 36.

6.1.2.3 Existing Circuit Breaker Upgrades – Short Circuit

The increase in the fault duty on the system as a result of the addition of the generation facility with the 25 - 2MVA generators and the 1 – 30/37/50MVA step up transformers with 8.5% impedance will not push the fault duty above the interrupting rate of any of the existing fault interrupting equipment.

6.1.2.4 Protection Requirements

Transmission line protective relaying will need to be installed on the new line sections created by this project. On the 2 mile line between the switching station and Mile-Hi Substation a pilot line protection system will be needed which will require the replacement of the relays on the line at Mile-Hi Sub and the installation of a high speed communication link between the two facilities.

On the longer line from the switching station to Alturas Sub a non-pilot step distance line relaying system can be used. This will make it possible to not have to modify the line relay package at Alturas Sub except for setting changes.

The 115kV line from Mile-Hi to Chiloquin Sub will continue to use the existing non-pilot system; only relay setting changes will need to be made to that system.

Since a communication system will be needed between the switching station and the collector station for a number of control and data acquisition purposes that same communication system can be used for a pilot line protection system for the line between the stations. The Transmission Provider will supply the protection system for both ends of this line.

At the switching station will be installed a relay that will monitor the voltage magnitude and frequency. If the magnitude or frequency of the voltage is outside of normal range of operation a signal will be sent over the communication system to the collector station. At the collector station this signal is to trip open all of the 34.5kV feeder breakers to disconnect the wind turbine generators. By tripping the 34.5kV breakers instead of the 115kV breakers the station service to the wind farm is maintained to facilitate the restoration of the generation.

6.1.2.5

Data (RTU) Requirements

Data from both the switching station and the collector station will need to be fed into the Transmission Provider's SCADA to facilitate the operation of the transmission system. To accomplish this, remote terminal units (RTU)s will be installed at both stations. The RTUs will need to communicate with the Transmission Provider's SCADA master in Portland, Oregon. Besides the control and data from the switching station 115kV breaker positions the following data will be needed:

From the Switching Station:

Analogs:

- Net Generation MW
- Net Generator MVAR
- A phase 115kV voltage
- B phase 115kV voltage
- C phase 115kV voltage

Accumulator Pulses:

- Interchange metering kWH

From the Collector Station:

Analogs:

- Real power flow through each of the 34.5kV line feeder breakers
- Reactive power flow through each of the 34.5kV line feeder breakers
- Reactive power flow from each of the shunt capacitor banks
- A phase 115kV transmission voltage
- B phase 115kV transmission voltage
- C phase 115kV transmission voltage
- Wind speed

Status:

- All 34.5 and 115kV breakers and circuit switchers
- Line relay trouble alarm

The interchange real power MW will need to be telemetered to the Transmission Provider Energy Control Center in Portland independent of the analog supplied to the RTU

6.1.2.6

Communication Requirements

For Line Protection:

High speed communication systems will be needed to support line protection on the following lines:

- Switching Station - Mile-Hi Substation
- Switching Station - Collector Station

Microwave radio will need to be installed between the switching station and Mile-Hi Substation to communicate the high-speed tripping. Transmission Provider has no communications facilities in the area. A hilltop microwave site will be required between Mile-Hi Substation and the switching station. Towers, antennas, waveguide, radios, and multiplexing equipment will be required at Mile-Hi Substation and the switching station.

High speed communications for line protection between the switching station and the collector station will be accomplished by a fiber system. This will be terminated in multiplexing equipment to break out the individual circuits required.

Line protection, SCADA, telemetry, and dial-up circuits will be run on the fiber and microwave systems to Mile-Hi Substation.

For Data Delivery to the Control Centers:

A DS1 lease will be installed between Mile-Hi substation and Klamath Service Center. The lease will be terminated in channel banks at the two sites. SCADA, dial-up voice and data, and telemetry circuits will be routed over this lease to Klamath Service Center. Dial-up circuits will be terminated in the PBX there. SCADA will be placed on an existing circuit to Portland Control Center. Telemetry will be placed on existing circuits to Portland Control Center and Medford Service Center.

6.1.2.7 Metering Requirements

The metering will be 115 kV 3-phase, 4-wire configuration (three voltage and three current transformers) and shall be Transmission Provider's standard main/backup metering arrangement with signal transfer switches to allow continued telemetry during routine maintenance.

The Interchange Customer shall purchase and install metering equipment but must submit metering design drawings for approval to Transmission Provider before purchasing equipment. Transmission Provider will program, verify installation and subsequently maintain the revenue metering system. The metering equipment shall be mounted and wired in its own switchboard panel as approved; example arrangement drawings can be supplied if necessary. The main/backup metering will supply metering signals as outlined above.

The instrument transformers for the revenue metering shall be independent line metering at the point of interconnection as the collector station line connects to the new three breaker ring bus switching station. It is required that these instrument transformers shall be wire wound type either combined metering units or separate current and voltage transformers (Ritz Transformers 0.3% metering accuracy or equal).

The Interchange Customer shall apply for retail services as applicable from Transmission Provider since it will supply power to the collector station when the generation is not in operation. The L&G 2510 switchboard meters shall measure the bi-directional energy and quadergy flow between the switching station and the collector station.

The Landis+Gyr 2510 meter must have telephone modem and four channel analog capability (0-1.0 ma). It is to be determined whether the meters will need to be networked with the SCADA System using DNP3 Level 2 protocol: L&G 2510 meter part number 8623WBA0 is Transmission Provider's standard meter.

The proposed metering scheme is diagramed below contains the main and backup metering with kWh pulse relays and transfer switches for the analog and digital pulses. The meters shall be connected to a dialup phone line for communications with Transmission Provider MV90 system which maintains data of generation and usage for Commercial and Trading Back Office Group. Only one phone circuit is required as the meters will be interconnected.

Transmission Provider shall perform circuit verification of the metering system and meter testing before full commercial operation can commence.

Below is a schematic diagram of the proposed metering scheme:

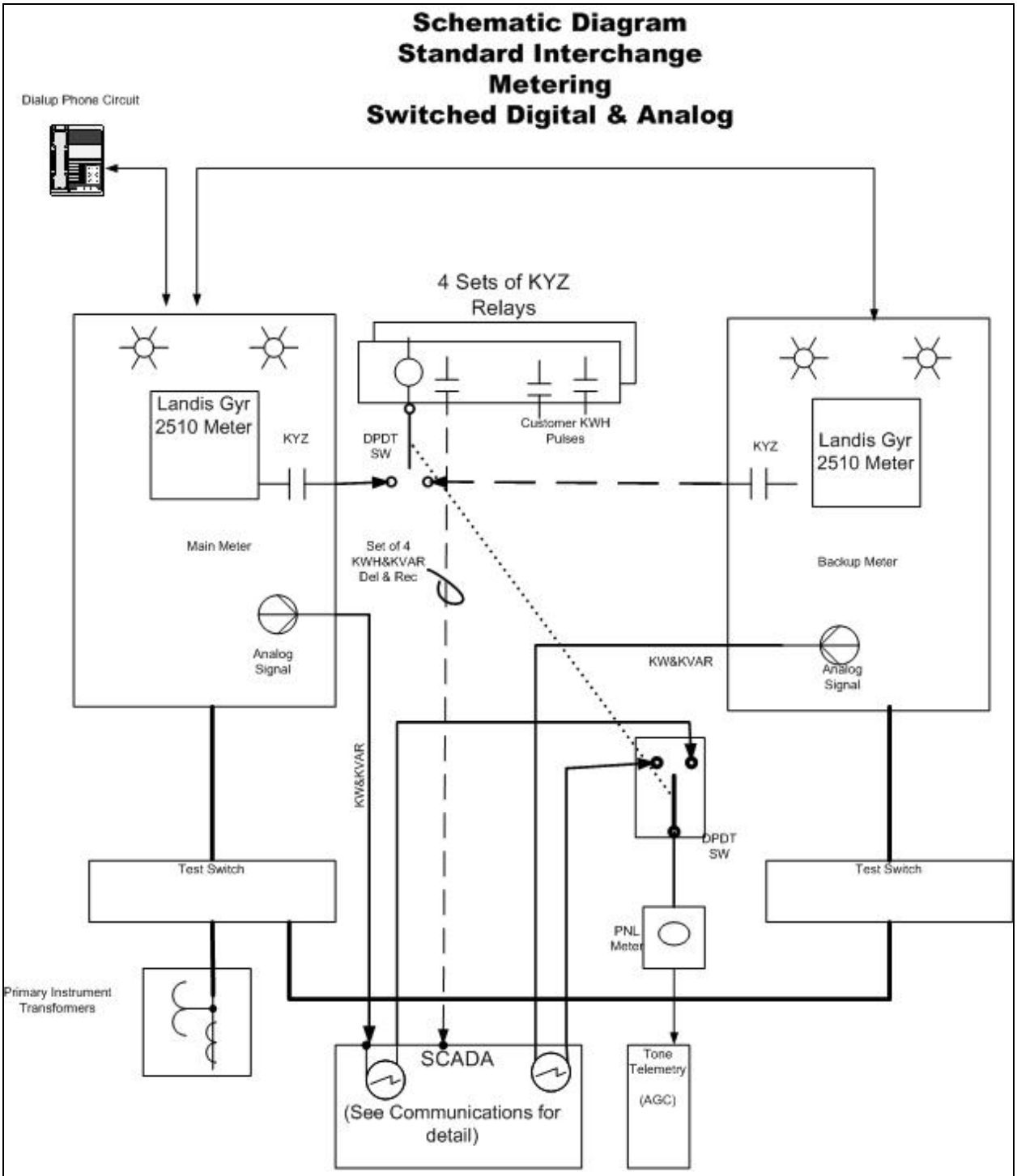

The operation of switching both digital and analog provides for the main meter to be removed from service and the backup meter will send both kWh pulses and analog signal for kWh accounting and generation control without interruption.

6.1.3 Cost Estimate

Interconnection – Direct Assigned Facilities	$ 150,000
Interconnection – Network Upgrades	$4,440,000
Total Cost – ER Interconnection Service – Interconnection Only	**$4,590,000**

6.1.4 Schedule

The critical path item in the construction schedule will be the acquisition, engineering, procurement and construction of the switching station. Transmission Provider can complete this in 18 months following the signing of a Large Generator Interconnection Agreement.

6.1.5 Maximum Amount of Power that can be delivered into Network Load, with No Transmission Modifications (for informational purposes only)

This section identifies the maximum allowed output, at the time the study is performed, of the interconnecting Large Generating Facility without requiring additional Network Upgrades. The maximum allowed output of the interconnecting Large Generating Facility without requiring modifications beyond those discussed above, is 50 MW.

6.1.6 Additional Transmission Modifications Required to Deliver 100% of the Power into Network Load (for informational purposes only)

No additional modifications required.

6.2 Network Resource (NR) Interconnection Service

6.2.1 Study Results

The results are the same as the total results for ER Interconnection Service. The combined results are the outcome of the NR Service study.

6.2.2 Requirements

The requirements are the same as the total requirements under Section 6.1 (for ER Interconnection Service). All are required for NR interconnection service.

6.2.3 Cost Estimate

This section identifies the installed cost estimate (in current year dollars) for Transmission Provider's Interconnection Facilities and Network Upgrade Requirements for NR Service. The resulting estimated cost is the same as the cost under Section 6.1 (ER Interconnection Service), since additional modifications to deliver the power to network load are not required..

6.2.4 Schedule

Based on these requirements, the schedule is the same as for ER Interconnection Service.

7.0 PHASE 2 – 50 MW

7.1 Energy Resource (ER) Interconnection Service

7.1.1 Study Results

The increase in the fault duty on the system as a result of the addition Phase 2 of the generation facility with the 50 - 2MVA generators and the 2 – 30/37/50MVA step up transformers with 8.5% impedance will not push the fault duty above the interrupting rate of any of the existing fault interrupting equipment.

7.1.2 Requirements

RTU and SCADA database modifications, relay settings changes and additional voltage/freq trip implementations will be required as a result of the addition of the Phase 2 generation.

7.1.3 Cost Estimate

Interconnection – Direct Assigned Facilities	$5000
Interconnection – Network Upgrades	$ 0
Total Cost – ER Interconnection Service – Interconnection Only	**$ 0**

7.1.4 Schedule

This work can be completed within six months of a signed Large Generator Interconnection Agreement.

7.1.5 Maximum Amount of Power that can be delivered into Network Load, with No Transmission Modifications (for informational purposes only)

This section estimates the maximum Phase 2 output that can be delivered from the Generating Facility without requiring additional Network Upgrades. The maximum estimated output of Phase 2 of the interconnecting Large Generating Facility without requiring modifications beyond those discussed above, is 45 MW.

7.1.6 Additional Transmission Modifications Required to Deliver 100% of the Power into Network Load (for informational purposes only)

7.1.6.1 Study Results

Under the realistic system configuration where the line between the new interconnection point substation and the Davis Creek tap is open for maintenance or repair, the 0.8 miles of 397.5-ACSR conductor between Mile-Hi Substation and the point of interconnection would exceed the 100-MVA summer rating if the Project's generation is at a full 100-MW output level. (Necessary VAR flow results in more than 100 MVA of flow.) This line segment will require rebuilding with 795-AAC conductor for Phase 2 of the Project.

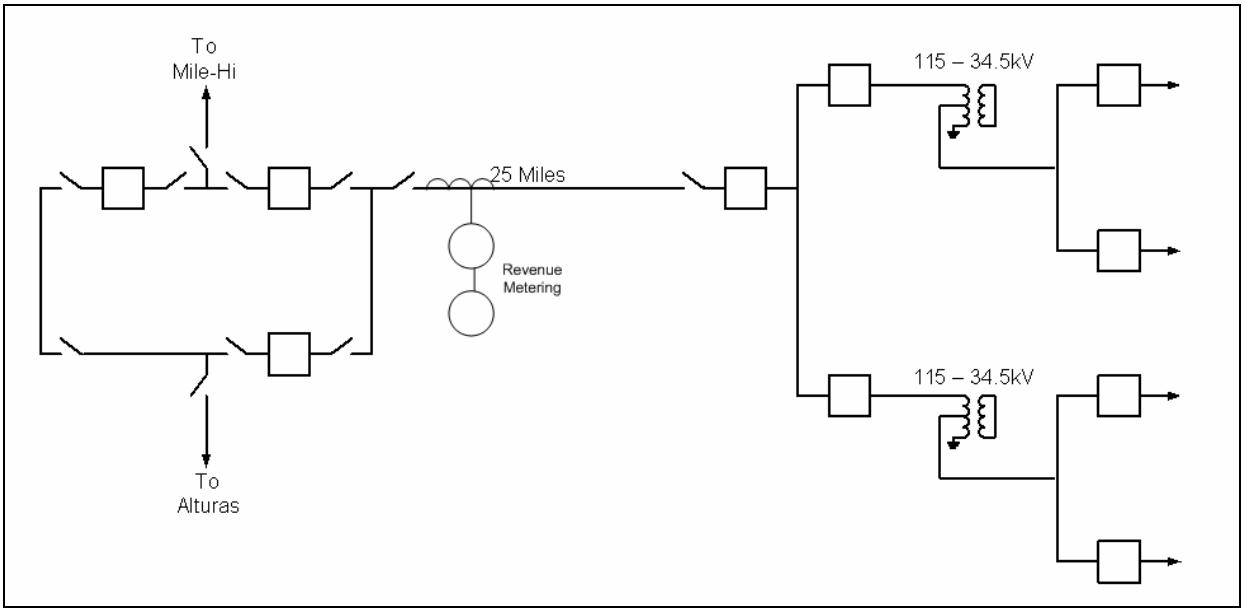

7.1.6.2 Requirements

7.1.6.2.1 Generating Facility Modifications

The Generating Facility requirements to meet low voltage ride through, power factor and dynamic voltage support will be the same as those for Phase 1 (see Section 6.1.2, Generating Facility Modifications).

7.1.6.2.2 Transmission Modifications

Expansion of the project from 50 MW to 100 MW will require replacing the conductor on approximately 0.8 miles of 115-kV line between the interconnection point and Mile Hi substation. These poles appear on the plan & profile to be adequate for reconductoring, but some may have to be replaced for strength reasons.

7.1.6.2.3 Protection Requirements

There will be minor relay setting changes associated with the reconductoring of the line.

7.1.6.3 Cost Estimate

Reconductoring approximately 0.8 miles of 115-kV line between the interconnection point and Mile Hi substation.

Interconnection – Direct Assigned Facilities	$ 5,000
Interconnection – Network Upgrades	$ 100,000
Total Cost – ER Interconnection Service – 100% Deliverability	**$ 105,000**

7.1.6.4 Schedule

The Transmission Provider can complete the reconductoring and setting changes within six months of a signed large generator interconnection agreement.

7.2 Network Resource (NR) Interconnection Service

7.2.1 Study Results

The results are the same as the total results under Section 7.1 (for ER Interconnection Service). The combined results are the outcome of the NR Service study.

7.2.2 Requirements

The requirements are the same as the total requirements under Section 7.1 (for ER Interconnection Service). All are required for NR interconnection service.

7.2.3 Cost Estimate

This section identifies the installed cost estimate (in current year dollars) for Transmission Provider's Interconnection Facilities and Network Upgrade Requirements for NR Service. The resulting estimated cost is the sum of the cost under Section 7.1 (for ER Interconnection Service).

ER Interconnection Service – Interconnection Only	$ 10,000
ER Interconnection Service – 100% Deliverability	$ 100,000
Total Cost – NR Interconnection Service	**$ 110,000**

7.2.4 Schedule

Transmission Provider could reconductor this segment of line and make the associated relay setting changes within six months of a signed Large Generator Interconnection Agreement.

8.0 PARTICIPATION BY AFFECTED SYSTEMS

There is a small chance that this project may affect fault duty on some of Surprise Valley REA breakers. This will be coordinated with them in the System Impact Study.