PACIFICORP

Small Generator
Qualifying Facility Interconnection
Feasibility Study Report

Completed for
GI Q0056
(A Qualifying Facility in Oregon)

Proposed Interconnection:
Vicinity of Existing Lyons Substation,
on PacifiCorp's Existing
Santiam – Hazelwood 69 kV Line
Located in Lyons, Oregon

February 10, 2006

TABLE OF CONTENTS

1.0 Description of the Generating Facility

GI Q0056 ("Interconnection Customer") has requested that PacifiCorp ("Transmission Provider") perform a Feasibility Study ("Study") for the proposed interconnection to its system of Interconnection Customer's 10.0 MW renewable biomass power project ("Project"), Qualifying Facility fueled by wood waste. Interconnection Customer is installing a synchronous, steam turbine generator that will be located at the Interconnection Customer's existing retail facility in Linn County, Oregon. The requested in-service date for this Project is January 1, 2007.

2.0 Scope of the Study

The Feasibility Study Report shall provide the following analyses for the purpose of identifying any potential adverse system impacts that would result from the interconnection of the Small Generating Facility as proposed:

- Initial identification of any circuit breaker short circuit capability limits exceeded as a result of the interconnection;
- Initial identification of any thermal overload or voltage limit violations resulting from the interconnection;
- Initial review of grounding requirements and electric system protection; and
- Description and non-bonding estimated cost of facilities required to interconnect the proposed Small Generating Facility and to address the identified short circuit and power flow issues.

3.0 Study Assumptions

This Study assumes the following:

- The Generating Facility is a Qualifying Facility (QF).
- Transmission Provider is aware of increasing operational limitations in this part of the sub-transmission system and has plans to construct a new 230 kV to 69 kV substation located electrically between the existing Stayton and Jefferson Substations with a in-service date anticipated in 2008. Impacts that this planned system change would have on the generator, were taken into account in making recommendations for this interconnection.

4.0 Description of Proposed Interconnection

The Interconnection Customer's Generating Facility would interconnect with the Transmission Provider's 69 kV Santiam sub-transmission system in the vicinity of the existing Lyons Substation. The Study included analysis of three interconnection points:

(1) on the Scio side of Lyons Substation,
(2) directly to the Lyons Substation bus, and
(3) on the Santiam side of Lyons Substation.

5.0 Planning Study Results

The analysis included representing the generation plant in power flow models of the Santiam area 69kV sub-transmission system, and assessing the impacts to system operation and control resulting from interconnection of the generator. Simulations were run for heavy summer, heavy winter, and light load conditions and for both the normal system configuration and contingency feed configurations likely to impact the generating plant.

Through power flow analysis it was determined that interconnecting the 10 MW Generating Facility as proposed in the vicinity of Lyons substation can be accommodated with minimal construction and system impacts.

For the most likely contingent feed configurations where the generating plant and Lyons Substation would be connected to Hazelwood Substation in Albany, and open to the BPA Santiam Substation, a generator trip event results in dramatically unacceptable distribution bus voltages at Lyons Substation. This would result in Transmission Provider being unable to deliver ANSI B range voltage to retail customers and cannot be tolerated. This configuration is used at variable times and duration for up to six weeks per year during system maintenance. While the situation is correctable, the cost is likely prohibitive for the plant. Without modifications, discussed below, the plant must be kept off line when it and Lyons Substation are fed from Hazelwood and open to Santiam.

There are two possible system upgrades that would solve the generator trip problem. The first is to construct the planned Parrish Gap 230 to 69 kV substation and construct a 0.5 mile tie line between the Santiam Switching Station and the Lyons to Scio line at a cost of about $8 million. The second alternative identified is to rebuild 9.5 miles of 69 kV transmission line for about $3.5 million and install an 8 MVAR static VAR compensator at the plant. The transmission line must be rebuilt because the #2 copper wire overloads on VAR flow between the plant and Hazelwood Substation.

If the plant is connected to the Hazelwood source, and is open to Lyons substation, which could occur when the 69 kV breaker at Lyons substation is out of service for maintenance, operation of

the plant is permissible and a generator trip event does not cause adverse retail voltages. However, it should be noted that this would require proper relaying upgrades at Hazelwood.

The study request included analysis of three possible interconnection points. The following describes the findings for each option and the identified construction required.

Interconnection on the Scio side of Lyons Substation

This is the recommended configuration. It is assumed that the plant's step up substation will be located adjacent to or a few hundred feet away from the existing transmission line. The following construction would be required:

- Install a transmission tap structure.
- Replace a transmission pole with a steel pole and install a 1200 amp 69 kV manual line switch with loop opening and line dropping attachments, on the Scio side of the tap point.
- Construct a transmission line tap into the plant substation where a 69 kV disconnect switch would be located.

If the tap line is several spans in length, a disconnect switch and steel pole would be required at the tap point. The line between the tap point and Lyons Substation is relatively short, is readily visible and accessible, and has minimal exposure. For these reasons, installing a disconnect switch at the tap point on this line section is optional, rather than required. Only the reliability of the plant is materially affected by the absence of this switch.

As a variation to this alternative, the Scio side disconnect switch could be replaced with a 69 kV breaker station, possibly at the old Lyons Substation site. This would add about $1.5 million to the project and would isolate the plant from line faults between Lyons and Scio Substations. This would also permit the plant to operate while the Lyons 69 kV breaker is out of service.

Interconnection to the Lyons Substation Bus

It is assumed that the applicant would construct a transmission line between the plant location and Lyons Substation on independent right of way from the Transmission Provider's line. The following construction would be required:

- Grade and expand the fenced area of Lyons substation to the east property line
- Construct 69 kV structures and extend the 69 kV bus work to the east
- Install a 69 kV center switch on the new bus work
- Install a 69 kV breaker line position and connect the plant's transmission line to the position

This alternative appears to offer no functional improvement over the recommended plan, and the generation would still have to remain offline when Lyons Substation is disconnected from the Santiam source. Installation of the 69 kV breaker is necessary because the line extension would make reliability to Jefferson, Stayton, Lyons and Scio substations dependent on a third party owned and maintained line, which Transmission Provider will not accept.

Line route restriction may require a variation on this option, which would involve rebuilding the existing transmission line between the plant site and Lyons Substation with a new double circuit line wholly owned and operated by Transmission Provider. The 69 kV breaker is still required

because the two lines would share common structures and the existing line is downstream from the existing 69 kV breaker at Lyons. It should be noted that if this line section requires maintenance, or repair, that both lines would likely have to be de-energized, taking the plant off line.

Interconnection on the Santiam side of Lyons Substation
It is assumed that the applicant would construct and own a new 69 kV transmission line between the plant site and the point of interconnection. The following construction would be required:

- Using existing company owned property adjacent to the west side of Lyons substation, construct a 69 kV switching and breaker station to accommodate the new tap point. It may be more practical to expand the existing substation fenced area to the west instead
- Install a 1200 amp 69 kV line disconnect switch with loop opening and line dropping attachments on the line toward Santiam Switching Station
- Install a 1200 amp 69 kV breaker and relaying with disconnect switches for the line feeding to the plant

This alternative appears to offer no functional improvement over the recommended plan, and the generation would still have to remain off line when Lyons Substation and plant are disconnected from the Santiam source. Installation of the 69 kV breaker is necessary because the line extension would make reliability to Jefferson, Stayton, Lyons and Scio substations dependent on a third party owned and maintained line, which Transmission Provider will not accept.

6.0 Requirements, Cost, & Schedule

6.1 Requirements

6.1.1 Generating Facility Modifications

The generating plant should remain within the VAR capabilities of the proposed machine using a conventional voltage control for the field, as proposed. The 69 kV system voltage at Lyons varies more than at most locations but remains within operating guidelines. The full range of system voltage was applied using a power flow simulation to assess the impacts to the generator, with successful results.

6.1.2 Transmission Modifications

Option 1 – Interconnection on the Scio side of the Lyons Substation
Reframe existing structure 2/4 on the BPA Santiam-Hazelwood 69/115kV to a 3-way tap 115 kV unshielded, single circuit, dead-end tap (TF-155).

Replace dead end structure 3/4 (the Scio side of 2/4) on the 69/115kV line with a steel pole with a 1200 amp, 69kV line switch TS601 with loop opening and line dropping attachments.

Construct single span tap to Interconnection Customer's new sub from structure 2/4.

6.1.3 Existing Breaker Modifications – Short-Circuit

The increase in the fault duty on the system as a result of the addition of the generation facility with the 15MVA generator and the 10MVA step up transformer with 6.96% impedance will not push the fault duty above the interrupting rate of any of the existing fault interrupting equipment.

6.1.4 Protection Requirements

With the power plant connected in the recommended configuration, on the Scio side of Lyons Substation, the power plant will need to be disconnected from Transmission Provider's system for faults any where on the 69kV system from Santiam Sub to Scio Sub and from Santiam Sub to Jefferson Sub when the system is operated in the normal configuration. In the some of the abnormal configurations the exposure extends to include the lines from Scio Sub and Jefferson Sub to Hazelwood Sub. Transmission Provider will be installing a protective relay panel at the power plant to detect faults on these 69kV lines but to set these relays to detect faults on all of this system in a high speed matter needed for the power quality issues for Transmission Provider's customers' load will not permit the needed relay coordination to minimize the frequency of trips of the power plant. To accomplish the protection needed two transfer trip circuits will need to be installed: one between Santiam Sub and the power plant and one between Lyons Sub and the power plant. The transfer trip circuit to Santiam Sub will disconnect the power plant if the relays on breaker L1116 detect a fault on the 69kV lines feeding out of that substation toward Lyons and Stayton Substation. The transfer trip circuit to Lyons Sub will disconnect the power plant if the relays on breaker 3M20 detect a fault on the 69kV line to Scio Sub. The locations of these breakers are shown on the following one line diagram:

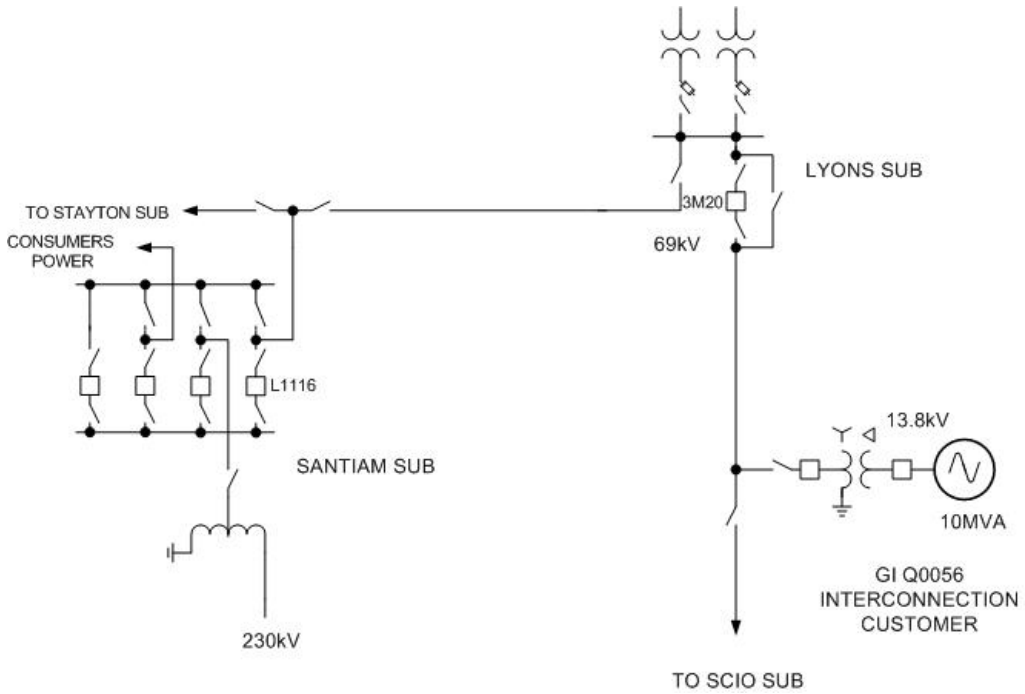

***Figure 1**: One Line Diagram for the Recommended Interconnection*

Also installed on the panel to be installed at the power plant will be a relay that monitors the voltage magnitude and frequency at the generation location. If the magnitude or frequency of the voltage is outside of normal range of operation the breaker at the plant will need to be tripped.

At Lyons Substation the controls for breaker 3M20 will need to be modified to add dead line checking to block the automatic reclosing from closing the breaker if a failure of the protective systems leads to delayed tripping of the generation facility for a transmission line fault. To accomplish this control modification a line side potential transformer will need to be installed.

6.1.5 Data Requirements (RTU)

A remote terminal unit (RTU) reporting back to Transmission Provider's Energy Control Center in Portland will be required at the generation facility. With this RTU Transmission Provider will be monitoring the following:

Analogs:
- Generator MW
- Generator MVAR
- A phase transmission voltage
- B phase transmission voltage
- C phase transmission voltage

Status:
- Generator breaker
- Transformer breaker
- Line relay trouble alarm

Accumulator Pulses:
- Interchange metering kWh

The interchange real power MW will need to be telemetered to the Transmission Provider's Energy Control Center in Portland independent of the analog supplied to the RTU

6.1.6 Communication Requirements

For Line Protection
Two digital high speed communication paths will be needed for the protective relaying: one between the power plant and Santiam Sub and the other between the power plant and Lyons Sub. To accomplish this, fiber optic cable will be installed from the power plant to Lyons Sub (~800') and from Lyons Sub to Santiam Sub (2.87 miles). Protective relays will communicate through direct-fiber links.

For Data Delivery to the Control Centers

For communications to control centers, a fractional T1 digital microwave radio will be installed from Lyons Sub to Transmission Provider's Prospect Hill Communications Site. One pair of fibers between the power plant and Lyons Sub will terminate in channel banks. At Lyons Sub, the channel bank will be set up in drop-and-insert mode, and will also terminate the fractional T1 off the digital microwave. SCADA from the power plant and Lyons Sub will be brought to the control centers through this link, as will meter dial-up and tone telemetry circuits. At Lyons Sub a microwave tower will be installed as well as microwave support systems.

6.1.7 Substation Requirements

No substation modifications are required under the recommended configuration.

6.1.8 Metering Requirements

The metering is assumed to be 69 kV 3-phases, 3-wire configuration (two voltage and two current transformers) and shall be standard main/backup interchange metering package with signal transfer switches to allow continued telemetry during routine maintenance on the metering.

The main/backup metering will supply analog signals for voltage and power as outlined above. The L&G 2520 switchboard meters shall be placed so that measurement of net generation is accomplished: gross generation (terminals of generator) minus generator station service loads.

The Interconnection Customer shall provide energy pulses from the station service meters to be totalized in the L&G 2510 meters. The meters shall be connected to a dialup phone line for communications with Transmission Provider's MV90 system which maintains data of generation and usage for Commercial and Trading Back Office Group. The L&G 2510 meters option must have 1200 baud modem and 8X8 (L&G P/N 8623E000-0011 or equal) relay card. It is assumed no RTU digital communications will be needed like DNP3 or ModBus.

6.2 Cost Estimate

Option 1 - Interconnection on the Scio side of Lyons Substation

Interconnection	$82,000
Other	$430,000
Total Interconnection Cost	**$512,000**

Option 2 - Interconnection at the Lyons Substation

Interconnection	$1,380,000
Other	$430,000
Total Interconnection Cost	**$1,810,000**

Option 3 - Interconnection on the Santiam side of Lyons Substation

Interconnection		$1,100,000
Other		$430,000
	Total Interconnection Cost	**$2,330,000**

6.3 Schedule

It is estimated that it would take approximately eight months from the signing of a Small Generator Interconnection Agreement to engineer, procure, and construct the Transmission Provider's portion of this project.

7.0 Conclusions

The interconnection as proposed is feasible. Option 1 is the most cost effective. Options 2 and 3 are significantly more expensive and do not offer significant advantage over Option 1.

8.0 Participation by Affected Systems

No affected systems participated in this study.