PACIFICORP

Small Generator Interconnection
Feasibility Study Report

Completed for
GI Q0055

Proposed Point of Interconnection
Approximately 11 miles from Dalreed Substation
on 34.5 kV Boeing Feeder 4K46
in Sherman County, Oregon

February 3, 2006

TABLE OF CONTENTS

1.0 Description of the Generating Facility

GI Q0055 ("Interconnection Customer") has requested that PacifiCorp ("Transmission Provider") study the proposed interconnection to its System of Interconnection Customer's biogas project ("Project"), which is a 9.54 MW capacity biomass generation project proposed for Sherman County, Oregon. The Project proposes to make useful electricity from waste manure. This Project will consist of four 2400 kW reciprocating generators fueled by biogas from the Interconnection Customer's dairy. Each generator will have a rated power factor of 0.8. These generators are planned to operate at full capacity 24 hours per day, seven days per week. The proposed generating facility will interconnect to Transmission Provider's existing 34.5 kV distribution feeder from its Dalreed Substation. The requested in-service date for this interconnection request is April 1, 2007.

2.0 Scope of the Study

The feasibility study report shall provide the following analyses for the purpose of identifying any potential adverse system impacts that would result from the interconnection of the Small Generating Facility as proposed:

- Initial identification of any circuit breaker short circuit capability limits exceeded as a result of the interconnection;
- Initial identification of any thermal overload or voltage limit violations resulting from the interconnection;
- Initial review of grounding requirements and electric system protection; and
- Description and non-binding estimated cost of facilities required to interconnect the proposed Small Generating Facility and to address the identified short circuit and power flow issues.

3.0 Study Assumptions

The Study assumes the following:

- All of the generators at the generating facility will be operated at full capacity. Therefore, all cases used in the Study assume maximum generation.
- The Generating Facility is a Qualifying Facility (QF).

4.0 Description of Proposed Interconnection

The Interconnection Customer's Generating Facility would interconnect with the Transmission Provider's existing 34.5 kV distribution feeder from its Dalreed Substation, about 11 line miles from the Substation. Figure 1 below outlines the proposed interconnection configuration.

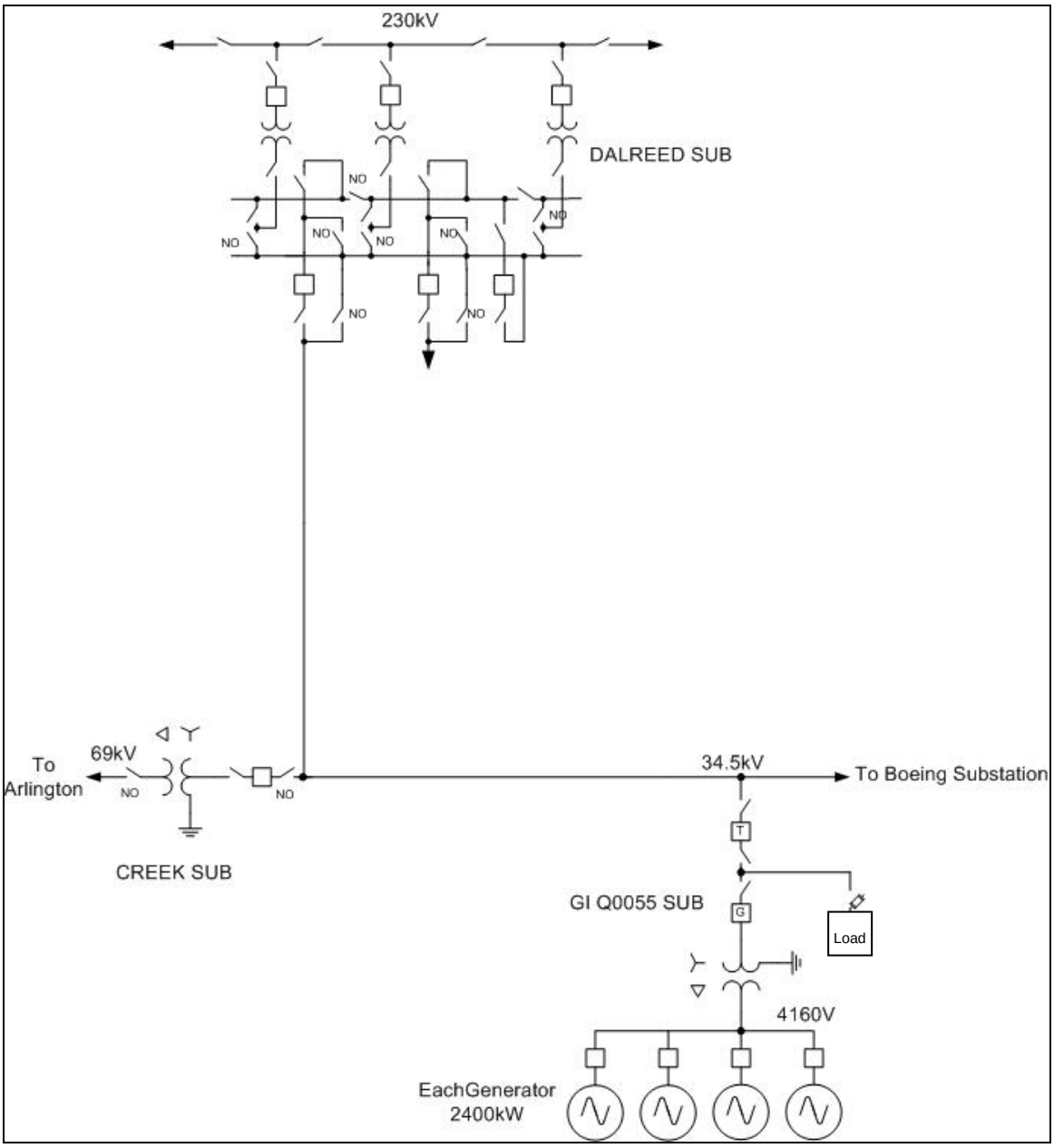

Figure 1: *One-line Diagram of Proposed Interconnection with Transmission Provider's System*

5.0 Study Results

Circuit modeling showed that during light load conditions and maximum generation, the voltage on the circuit will reach 133 V which exceeds Utility Range A voltage (114V – 126V) using the computer modeling software. The voltage is projected to rise to 133 V at the generators and drop to approximately 126 volts at the two nodes which are located east and west of the generation site.

Figure 2 below illustrates the Transmission Provider's Dalreed T-3553 transformer annual load data for 2005. This graph shows the load (in MWs) over time (in months). Review of all available time-stamped data shows that the load reaches as low as 1.12 MW at 3:00 A.M. on March 1, 2005. Because the proposed generation is 9.54 MW, this indicates that most of the time, the feeder load is supplied by the generation and not the Transmission Provider's system. Actually, the load exceeds generation only about four months of the year (anything above 9.54 MW in Figure 2 which is in the middle). This indicates that during the remaining eight months of the year, the load will be supplied by this generation.

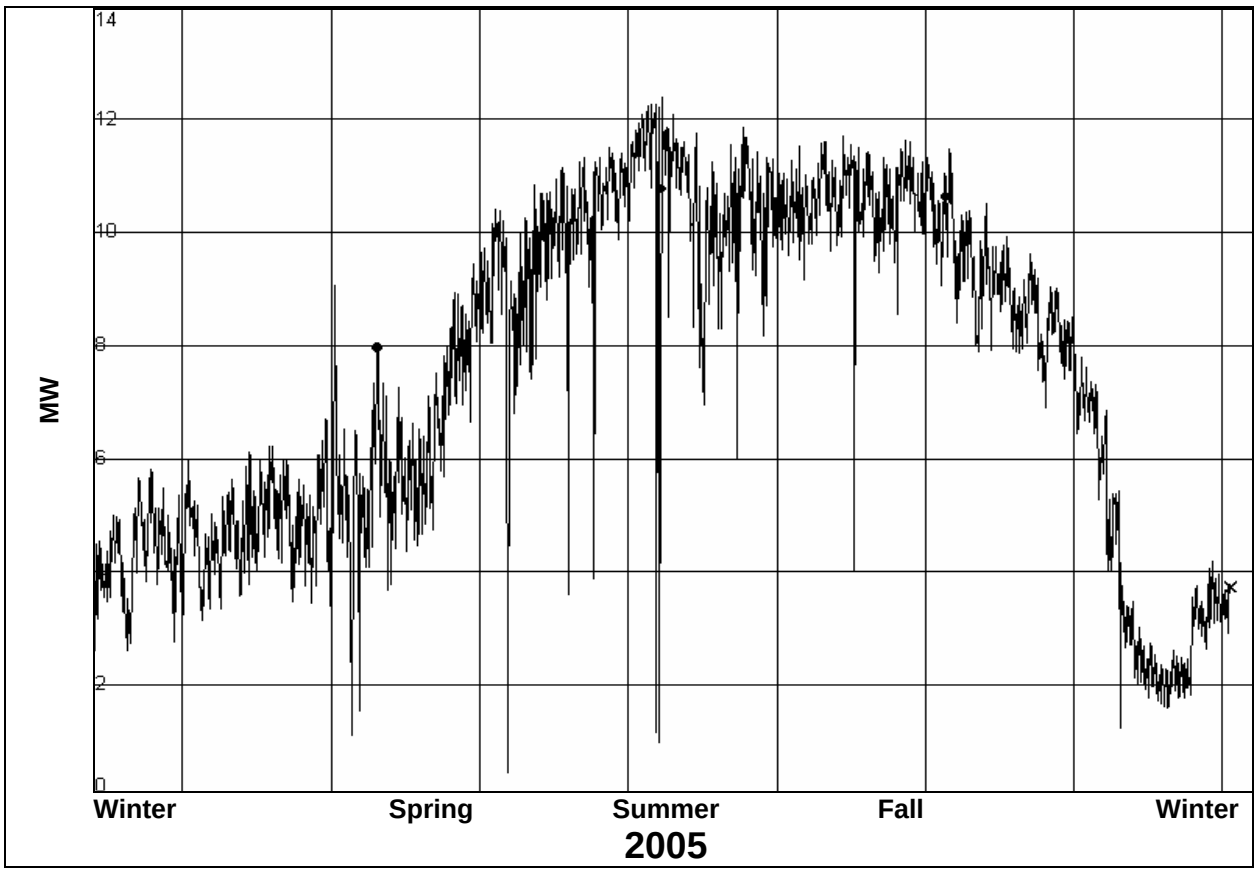

Figure 2: *Transmission Provider's Dalreed T-3553 Transformer Load*

6.0 Requirements, Cost, & Schedule

6.1 Requirements

6.1.1 Tap to Interconnection Customer's Generating Facilities

The Interconnection Customer would be responsible for design, procurement and construction of a three-phase circuit to the Transmission Provider's distribution line to either pole #265401 or #267400, whichever one is best suited for the line route. The Transmission Provider will install and own a switch for the tap line near the Point of Interconnection.

6.1.2 Distribution Modifications

Transmission Provider would require the reconductor of approximately 11 miles of three-phase main line circuit (both 1/0 ACSR and 4/0 ACSR) from Transmission Provider's Dalreed Substation (Boeing Feeder 4K46's breaker) to pole #265401 with 477 AAC near the Interconnection Customer's generation site. This is the conventional method of solving voltage problems of this nature on distribution circuits.

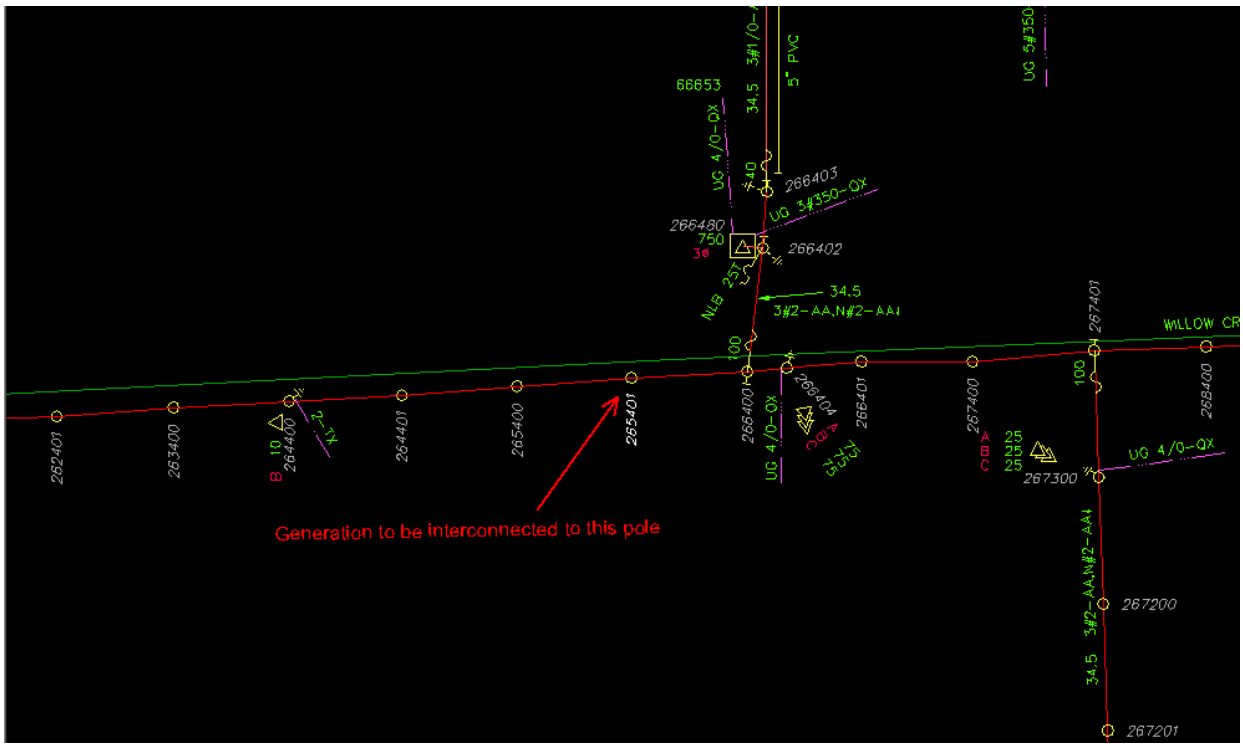

Figure 3: *Circuit Diagram at Interconnection Customer's Generating Facility*

6.1.3 Existing Breaker Modifications – Short-Circuit

The increase in the fault duty on the system as a result of the addition of the generation facility will not cause the replacement of any existing fault interrupting devices.

6.1.4 Protection Requirements

The protection on this system will need to disconnect the Generating Facility from the feeder for any fault on the 34.5kV feeder before or at the same time as the relays on CB 4K46 at Dalreed Substation operate for those faults. The generation facility will also need to disconnect from the system for faults on the 230 kV lines feeding Dalreed Substation. To accomplish this, the following will be required:

- A protective relay at the generation facility looking into the 34.5 kV system. This relay will need to contain phase distance elements to detect phase fault on the 34.5 and 230 kV systems, on which different numbers of generators operate, and still not cause a trip at the maximum load output of the plant.

- A three phase set of 230kV potential devices will need to be installed on the 230 kV bus at Dalreed Substation. The secondaries of these 230 kV potential devices will be connected in a broken delta configuration and connected to an overvoltage relay. This relay will detect single line to ground faults on the 230 kV system. With the transformer configuration at Dalreed Substation, single line to ground faults on the 230 kV system will not be sensed on the 34.5 kV side after the 230 kV breakers at the remote ends of the line open. The generators must be disconnected before the automatic reclosing of the 230 kV breakers, to allow a successful reclose and to prevent potential damage to the generators.

- A transfer trip communication circuit will be needed between Dalreed Substation and the generation facility. When the overvoltage relay detects a fault on the 230 kV system a trip signal will be sent to the generation facility over the transfer trip circuit to disconnect the generators. The transfer trip will also be keyed if the CB 4K46 at Dalreed Substation is opened.

- Also, a relay that monitors the voltage magnitude and frequency at the point of interconnection will need to be installed. If the magnitude or frequency of the voltage is outside of the acceptable range of operation, the generators will need to be disconnected from the 34.5 kV system. This relay will need three levels of overvoltage pickup, three levels of undervoltage pickup, two levels of overfrequency pickup, and two levels of underfrequency pickup. Each of these levels will need separate time delays.

- The Transmission Provider will design and construct a panel to be installed in the Generating Facility that will provide the line fault detection, receipt of transfer trip, and the out-of-acceptable voltage magnitude and frequency relay functions. This panel is be installed by Interconnect Customer.

- The fault detecting relay, the receipt of the transfer trip, and the out-of-acceptable voltage magnitude and frequency relay can trip open either Circuit Breaker "T", or Circuit Breaker "G" (on Figure 1) at the generation facility. The tripped CB will depend on whether the Interconnection Customer desires to keep its load connected to the generators, or to Transmission Provider's system, during these events.

- Normally the Boeing feeder out of Dalreed Substation is connected to a single 230 – 34.5 kV transformer at Dalreed Substation. The other feeder is connected to a different transformer. However, if equipment is out of service for maintenance or as a result of failure the two feeders at Dalreed Substation will be fed off the same 34.5 kV bus. A fault on the 34.5 kV bus or on the Simtag feeder will produce currents flowing through CB 4K46 from the generation facility in excess of the overcurrent relay pickups applied to CB 4K46. It will not be acceptable to have CB 4K46 trip open for these fault conditions. To prevent this directional overcurrent, relays will need to be applied. CB 4K46 is not a breaker with relays but an electronic recloser which cannot be configured with directional overcurrent relays. CB 4K46 will need to be replaced with a breaker and relays similar to the equipment installed in breaker position 4K40 at Dalreed Substation. The protection equipment will be owned and maintained by Transmission Provider and paid for by the Interconnection Customer.

- Dead line checking will need to be added to block the automatic reclosing of CB 4K46 at Dalreed Substation if a failure of the protective systems leads to delayed tripping of the generation facility for a feeder fault. Reclosing for this type of situation could cause damage to the equipment and needs to be prevented. To accomplish this a three phase set of voltage transformers will need to be installed; connected to the line side of CB 4K46. The secondaries of these voltage transformers will connect to the feeder protection relay to block auto reclosing if the line is energized.

- Under light load conditions the power from the power plant will flow back into the 230 kV bus at Dalreed Substation. The controller on the load tap changer (LTC) on transformer bank 2 at Dalreed Substation will need to be reset to function correctly in the condition of the reversed power flow.

6.1.5 Data Requirements (RTU)

A remote terminal unit (RTU) reporting back to Transmission Provider's Energy Control Center in Portland will be required at the generation facility. With this RTU Transmission Provider will monitor the following:

Analogs:

- Generator 1 MW
- Generator 1 MVAR
- Generator 2 MW
- Generator 2 MVAR
- Generator 3 MW
- Generator 3 MVAR
- Generator 4 MW
- Generator 4 MVAR
- Net generation metering MW
- Net generation metering MVAR
- 34.5kV A phase voltage
- 34.5kV B phase voltage
- 34.5kV C phase voltage

Status:

- Generator 1 breaker
- Generator 2 breaker
- Generator 3 breaker
- Generator 4 breaker
- Transformer 4160V breaker
- Transformer 34.5kV breaker
- 34.5kV Tie breaker

Accumulator Pulses:

- Net generation meeting kWh

The net generation real power MW will need to be telemetered to the Transmission Provider's Energy Control Center in Portland independent of the analog supplied to the RTU.

6.1.6 Communication Requirements

The protective relaying circuit between the generation facility and Dalreed Substation will be placed on an 11.5-mile run of single-mode fiber. The fiber will be terminated in patch panels. One pair of fibers will be used for direct communication between the relays. Another pair will be used for channel banks which will carry SCADA, telemetry, and dial-up circuits out of the generation facility into Transmission Provider's system. At Dalreed, the SCADA and telemetry

circuits will be bridged to existing circuits out of Dalreed. The dial-up circuit will be routed to Transmission Provider's Keys Road PBX.

6.1.7 Dalreed Substation Requirements

Connection of the Interconnection Customer's generation facility requires that the 34.5 kV Recloser (4K46) at Transmission Provider's Dalreed Substation be replaced with a new 38 kV, 1200 Amp circuit breaker as well as replacement of the associated 34.5 kV, 600 Amp disconnect switches with 1200 Amp units. It is also required that three 230 kV CCVT's be installed on the 230 kV bus and three 34.5 kV VT's be installed on the line side of circuit breaker 4K46.

Equipment List:

- 1 each – 38 kV, 1200 Amp, 20kA Circuit Breaker
- 3 each – 230 kV Capacitor Coupled Voltage Transformer (CCVT)
- 3 each – 46 kV Capacitor Coupled Voltage Transformer (CCVT)
- 6 each – 34.5 kV, 1200 Amp Hook type disconnect switches
- 2 each – 34.5 kV, 1200 Amp Group Operated TPST, Vertical Break Disconnect Switches

6.1.8 Metering Requirements

Transmission Provider requires telemetry equipment be installed at all Generating Facilities connected to its circuits that are greater than or equal to one MW. This is to allow its dispatch personnel at its Portland dispatch center to keep tabs of their operational status and power output for use in the daily dispatching activities of Transmission Provider's power system. Telemetry equipment will be installed at a location determined by Transmission Provider's local operations employees. This location will be at a point which is considered to be owned and operated by Transmission Provider and not within the Interconnection Customer's premises.

The metering shall be a standard main/backup interchange metering package with signal transfer switches to allow continued telemetry during routing maintenance on the metering. The main/backup meters will supply analogs for signals for voltages and energy as outlined above. The metering shall be placed so that measurement of net generation is accomplished: gross generation minus generator station service. In addition, the meters shall be connected with a dialup phone line for communications with Transmission Provider's MV90 system which maintains data of generation and usage for Commercial and Trading Back Office Group. The standard meter package is diagrammed below:

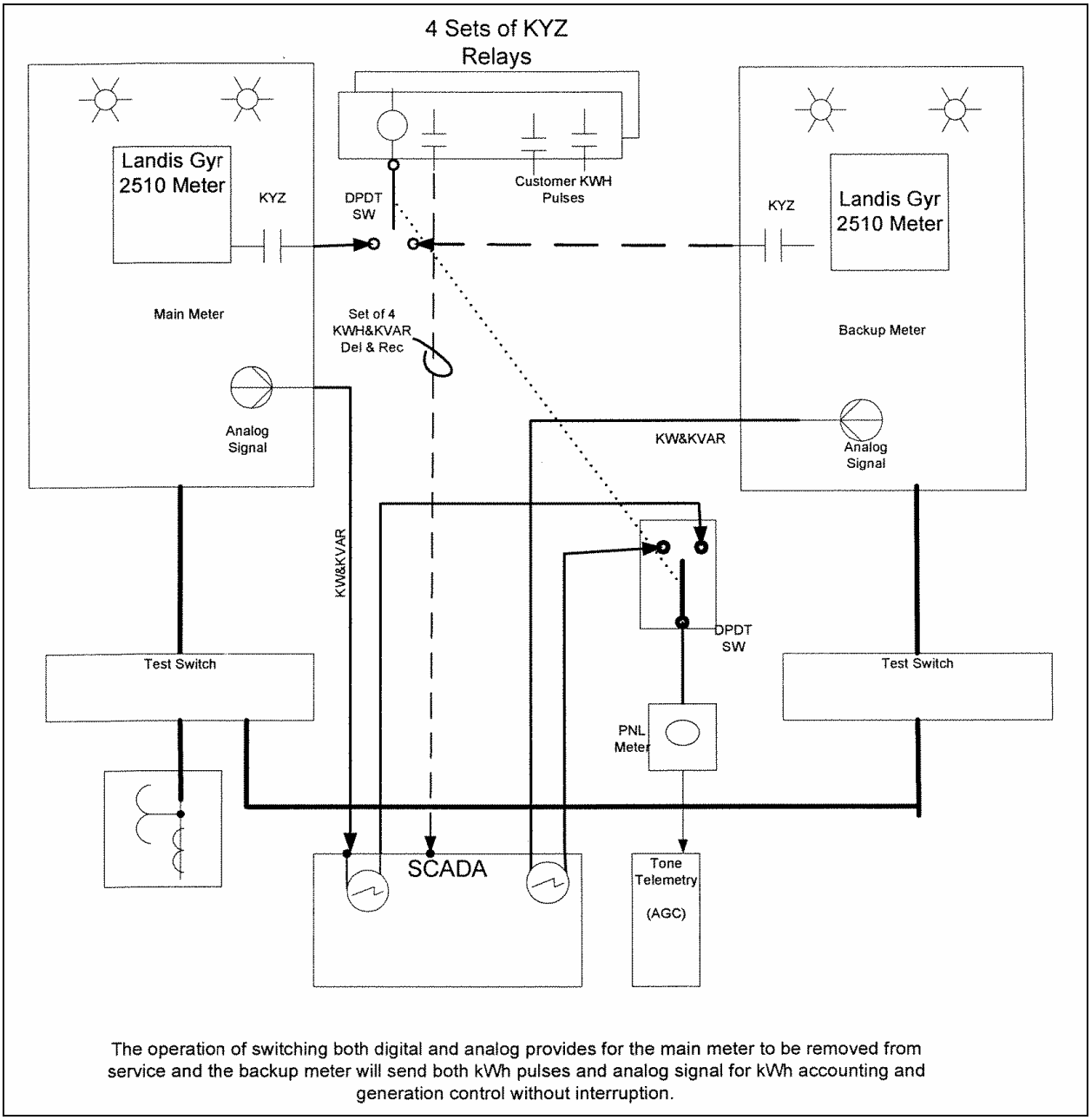

***Figure 4**: Standard Interchange Metering*
Switched Digital & Analog

6.2 Cost Estimate

The total cost to interconnect the above described facility is estimated at approximately $1,705,000.

6.3 Schedule

The total time to complete construction, from the signing of an Interconnection Agreement is estimated to be 40 weeks.

7.0 Conclusions

To facilitate interconnecting the Interconnection Customer's Generating Facility to the Transmission Provider's 34.5 kV feeder from its Dalreed Substation, and to mitigate the impact to existing customers on the system requires reconductoring of approximately 11 miles of 34.5 kV lines between the Dalreed facility and the tap to the generation facility. The line upgrade will include a fiber path from the generating facility to Dalreed. Additionally, protection and other communications additions will be required on Transmission Provider's system.

8.0 Participation by Affected Systems

No Affected Systems were identified in relation to this Interconnection Request.