PACIFICORP

Generation Interconnection System Impact Study Report

Completed for
Q0052

Proposed Generation Interconnection at
Salt Lake County, UT

August 26, 2005

1.0 Description of the Generating Facility

Q0052 ("Interconnection Customer") is installing three generators driven by reciprocating engines at the Salt Lake County landfill about two miles from the airport ("Project"). There will be two 800kW and one 1600kW synchronous 480V machines. The three generators will be connected to one 12.5kV – 480V, 4 MVA, 7% impedance step-up transformer, with a winding configuration of wye-grounded on the high side and delta on the low side. The Project will be connected to an existing 12.5kV circuit 11 out of PacifiCorp's ("Transmission Provider") Terminal Substation, via a new 3,650 ft radial tap line. See Figure 1.

2.0 Scope & Objectives of the Study

The objective of the System Impact Study is to ensure that the Interconnection Customer's generator can be connected safely and reliably to the system and to provide a high-level definition of system modifications and additions required for the interconnection.

3.0 Existing Facilities at Transmission Provider's Interconnection Location

A section of the existing circuit 11 runs parallel with 5600 West Street. The connection to the new generation facility will be made to this circuit near 8th South Street. See Figure 1.

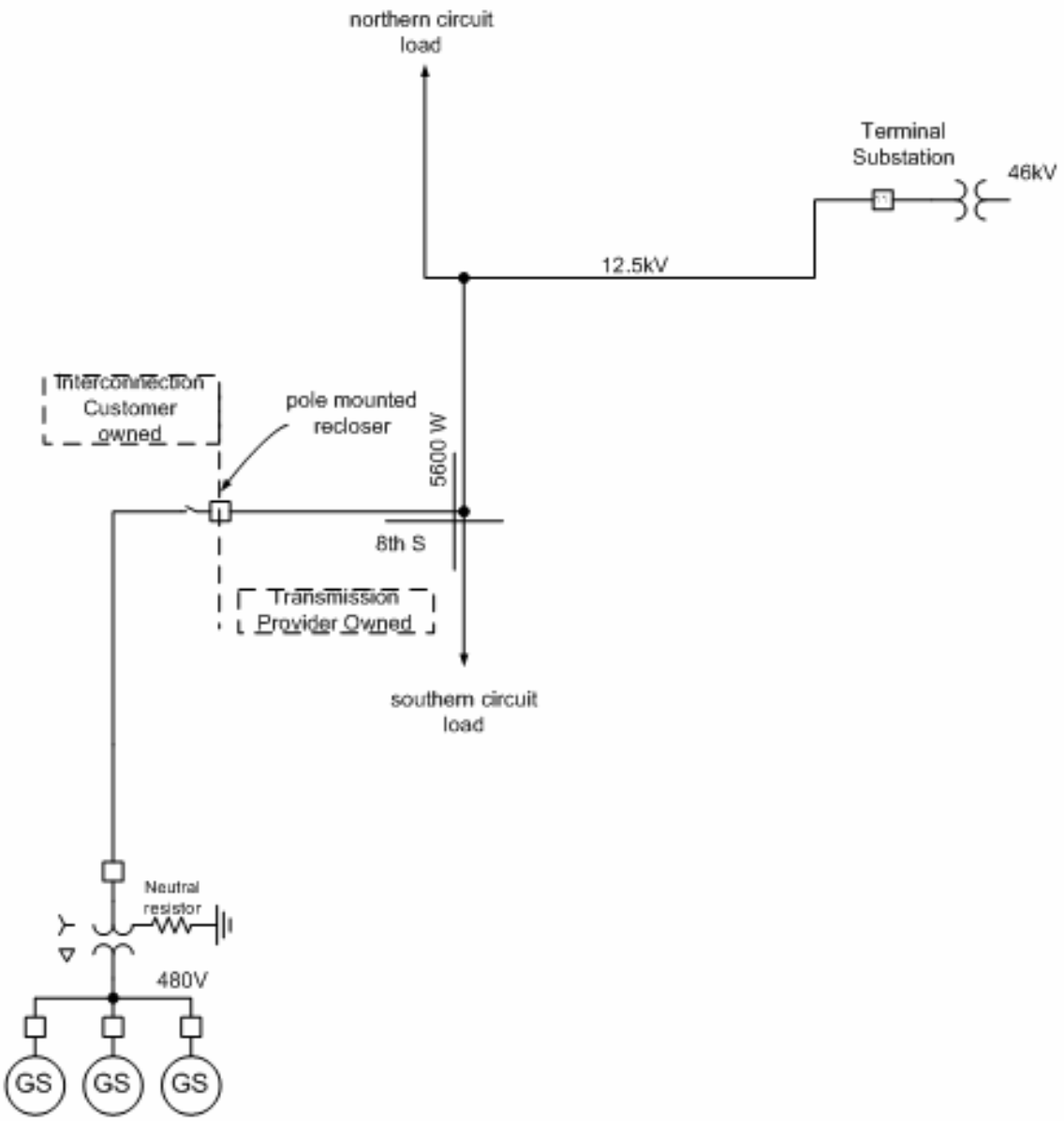

Figure 1: One-line diagram showing the existing distribution system and the connection of the Interconnection Customer's Generating Facility

4.0 Impact Study Results

Study Assumptions

The generators are expected to operate at full capacity 24 hours a day and seven days a week, except when down for maintenance; therefore, no cases were run for minimum generation. Two cases were run:

1. Minimum feeder load and maximum generation, and
2. Maximum feeder load and maximum generation.

Results

The minimum loading on Terminal Transformer #1 is 1.49 MVA, which is less than the output of the generators. Therefore, during minimum loading conditions, power will flow into the Transmission Provider's transmission system.

The increase in the fault duty on the system as a result of the addition of the generation facility will not cause the replacement of any existing fault interrupting devices.

4.1 Interconnection

Approximately 3,650 feet of 477 AAC distribution class circuit will be added to connect the Interconnection Customer's generator site to the Transmission Provider's distribution power line. The Point of Change of Ownership will be at the Salt Lake County landfill's property boundary. Approximately 2,400 feet of the radial tap line will be on Land Fill property and owned by the Interconnection Customer, and 1,250 feet will be owned by the Transmission Provider. This size (477 AAC) conductor is the most economical considering the cost of losses over time for a generation source connected to the Transmission Provider's lines, according to the Transmission Provider's distribution standards EC001, EC011, EC021. This conductor is capable of reducing the cost of losses better than any other approved conductor for this loading. This generation facility should only produce 157 amps of current during its rated operation.

A re-closer with a generation control package will need to be installed at the Point of Change of Ownership between the Interconnection Customer's generation site and the Transmission Provider's distribution facilities, at a pole agreed to by both parties. This re-closer will serve as the protection device for the Transmission Provider's customers for faults originating in the Interconnection Customer's generating facilities. It will also serve to provide a hot line block (with non re-close) and a transfer trip open point in the event that an islanding condition develops with the Interconnection Customer's Generating Facilities and the Transmission Provider's distribution circuit and substation. A synchronous generator, such as this one, can carry the Transmission Provider's load for a long duration.. The hot line block function will prevent damage or destruction of the generator(s) that would occur when the Transmission Provider's source is closed back in when the generator is still on line.

4.2 Protection Requirements

To reduce the impact of the additional exposure that the approximate 0.7 miles of 12.5kV line will add to circuit 11, a pole mounted line re-closer will be installed at the beginning of the developer's 12.5kV line. This re-closer will operate for any faults on the radial line to the generation facility. If automatic re-closing is desired for transient faults, then a dead line check will be needed. The re-closer will use an SEL 351R relay. This relay will be set to meet the Transmission Provider's requirement for under/over frequency and under/over voltage protection.

At the generation facility, a 5.5 Ohm neutral resistor will need to be installed between the neutral bushing on the 12.5kV – 480V transformer to ground. This resistor will limit the current supplied for ground faults on the 12.5kV system so that the relays on circuit breaker (CB) 11 at Terminal Substation will not operate for ground faults on the other feeder circuits out of Terminal Substation but the ground connection will still limit the magnitude of the neutral shift during ground faults. The resistor needs a 40A continuous and a 400A for one minute rating.

The protection on this system will need to disconnect the generation facility from the circuit for any fault on the circuit before or at the same time as the relays on CB 11 at Terminal Substation operate for those faults. To accomplish this, the Interconnection Customer has two options: 1) install and maintain a transfer trip circuit between Terminal Substation and the generation facility, or 2) set the protective relays at the generation facility to trip the transformer breaker high speed for any faults on circuit 11. To ensure that the generation facility's protection will respond to all fault conditions on circuit 11, the relays will also respond to faults on the other 12.5kV circuits fed out of Terminal Substation. The consequence of the having the protection operate this way is that the generation will be interrupted for fault events that the facility would not need to be disconnected for if a more coordinated protection could be applied. If the transfer trip circuit is installed, the transformer breaker will be tripped by this communication circuit any time CB 11 operates and the protective relays at the generation facility would be set in a time delay backup mode of operation thus keeping the generation on line for the maximum amount of time.

The protection at the generation facility will need to detect faults on the 12.5kV circuit regardless of how many of the Interconnection Customer's generators are in-service at the time of the fault. To accomplish this when only one 800kW generation is in-service but still be able to handle the maximum output of the generation facility will require the application of relays equipped with other than phase overcurrent elements. The Transmission Provider would suggest that an SEL 321 relay be applied. The phase overcurrent element can be torque-controlled by the zone 2 distance element. This permits setting the pickup of the phase overcurrent below the maximum load current flow when all three generators are in-service because the overcurrent element will not start timing until a fault is detected by the distance element. The distance element requires that the voltage be depressed, as well as increased current, and that the phase relationship between the voltage and current is consistent with the conditions during a fault. Other multifunction relays with this type of elements could be used but the SEL 321 is a relay that the Transmission Provider typically applies.

At Terminal Substation on CB 11 dead line checking will need to be added to block the automatic re-closing from closing the re-closer if a failure of the protective systems leads to delayed tripping of the generation facility for a feeder fault. Re-closing for this type of situation could cause damage to the equipment and needs to be prevented. It is not clear at this time if the existing McGraw Edison Form 3A re-closer can be modified for dead line checking. The re-closer will need to be replaced if it cannot be modified.

4.3 Data Requirements (RTU)

A remote terminal unit (RTU) reporting back to the Transmission Provider's Energy Control Center in Salt Lake City will be required at the generation facility. With this RTU the Transmission Provider will be monitoring the following:

Analogs:
- Generator 1 MW
- Generator 1 MVAR
- Generator 2 MW
- Generator 2 MVAR
- Generator 3 MW
- Generator 3 MVAR
- Interchange metering MW
- Interchange metering MVAR
- 12.5kV A phase voltage
- 12.5kV B phase voltage
- 12.5kV C phase voltage

Status:
- Generator 1 breaker
- Generator 2 breaker
- Generator 3 breaker
- Transformer 12.5kV breaker

Accumulator Pulses:
- Interchange meeting kWh

The interchange real power MW will need to be telemetered to the Transmission Provider's Energy Control Center in Salt Lake City independent of the analog supplied to the RTU.

4.4 Metering Requirements

Bi-Directional Revenue Metering

The Transmission Provider will design and provide specifications for ordering all interconnection revenue metering equipment. Stand-alone revenue metering is required to be installed on the primary unregulated 12.5 KV line at a suitable location near the generation,

breaker metering is not acceptable. The instrument transformers must be installed on standard Transmission Provider-approved underground or overhead facilities.

The metering instrument transformers shall be wye connected design. The current transformers shall be 0.15% 200/5 high accuracy metering, RF 1.5. The voltage transformers shall be 0.3% accuracy; ratio 60/1 for 12.5 kV connected metering.

Revenue metering design will include two L&G 2510 meters at the interchange point with both DNP and analog output boards. The meters will measure delivered MWH and MVARH (Q1&Q2) for standard retail sales and received MWH and MVARH (Q3&Q4) for generation received quantities.

The primary meter will be used for SCADA and revenue MV-90 dialup data. A backup meter is required for telemetry and secondary dialup data. The SCADA quantities will be defined as delivered (OUT) and received (IN) accumulator MWHs and MW and MVAR instantaneous readings. The telemetry requirement will be MW only and provided to the backup data communication system.

A dial-up phone line is required for retail sales and generation accounting via the MV-90 translation system.

Generation Metering

To provide the Transmission Provider's RTU with either analog or DNP digital signals, each generator must have an L&G 2510 meter designed and installed by the customer at a suitable location. Transmission Provider will supply specifications and provide programming and testing for the 2510 meter.

The generation metering instrument transformers shall be .3% revenue grade and it is acceptable to connect the instrument transformers either delta or wye. The current and voltage transformer ratios will be determined during final design.

4.5 Communication Requirements

A new protected fractional T1 digital microwave from Terminal Substation to the proposed Interconnection Customer's metering site and all digital multiplex, SCADA, and analog telemetering equipment to provide communication circuits to SCC and Goshen Substation will need to be installed.

1. Design
    a. Install new protected 960 MHz Microwave Data System (MDS) fractional T1 digital microwave equipment at the Generation site and Terminal Substation.
    b. Install new Coastcom R409 digital multiplex equipment at the Generation site and Terminal Substation.

c. Install a Harris D20 RTU at the metering point for Salt Lake Control Center (SCC) EMS data requirements.
d. Install RFL analog telemetering equipment at Generation site, SCC and Goshen for backup analog telemetering.
e. Install digital multiplex channels to existing Coastcom digital multiplex at Terminal Substation, SCC, Ben Lomond Substation and Cutler Microwave.
f. Install analog multiplex at Cutler Microwave and Goshen Substation.

Protected fractional T1 radio communications is proposed for the Transmission Provider's transmission interconnection data requirements for this project. The following assumptions were used in developing the estimated cost:

1. Harris D20 SCADA RTU equipment for breaker status, alarms, MW, MVAR, and MWH data with a digital communications circuit to the Salt Lake Control Center (SCC) is required
2. Analog telemetering equipment with a communication circuit to SCC for MW is required
3. Analog telemetering equipment with a communication circuit to Goshen Substation for MW is required
4. A voice OPX circuit from the North Temple Office (NTO) is required at the generation site
5. A data OPX circuit from the NTO is required at the generation site for metering
6. A relay OPX circuit from the NTO is required at the generation site
7. The SCADA and communications equipment are to be located in the Generation site control building
8. Battery backup is required at the Generation site (-48 Vdc)
9. Line-of-sight exists for radio communications between the proposed generation site and Transmission Provider's Terminal Substation.
10. Redundant radio equipment is required
11. Yagi antenna at the Generation site to be mounted on new 20-foot MAS type tower
12. Yagi antenna at Terminal Substation to be mounted on existing tower
13. DC power (-48 Vdc) is available at Terminal Substation

5.0 Conclusions

The following conclusions were drawn based on this System Impact Study:

- The Generating Facility will be connected to the Transmission Provider's existing 12.5 kV distribution circuit from Transmission Provider's Terminal Substation. The tap point will be near the intersection of 8th South and 5600 West Streets.
- A re-closer will be required at the Point of Change of Ownership (at the Salt Lake County landfill boundary) to protect the Transmission Provider's customers for faults originating in the Generating Facilities. The re-closer will use an SEL 351R relay.
- A 5.5 Ohm neutral resistor must be installed o the step-up transformer to limit current supplied for ground faults on the 12.5kV-system.

- Two protection options are offered for disconnecting the Generating Facility from the circuit for any fault on the circuit before or at the same time as the relays on Feeder 11 at Terminal Substation operate for those faults.
- The Transmission Provider recommends that an SEL 321 relay be used for protection on the circuit at the Generating Facility.
- Dead line checking on the Feeder 11 circuit breaker at Terminal Sub must be added to block the automatic re-closing from closing the re-closer if a failure of the protective system leads to delayed tripping of the Generation Facility.
- An RTU and telemetering installation will be required at the Generating Facility, for the purpose of transferring data to the Transmission Provider's Control Center.
- Bi-directional revenue metering, at the high side of the step-up transformer, and individual generator metering, measuring net MW for each generator, will be required.
- A communication path must be installed between the Generating Facility and Transmission Provider's Terminal Substation, Salt Lake Control Center and Goshen Substation.