**DRAFT**

Large Generator Interconnection

# System Impact & Facilities Study Report

Completed for

**Q0051**

Proposed Point of Interconnection

**Near Rowley 138 kV Substation**

**In Tooele County, UT**

**February 20, 2006**

# TABLE OF CONTENTS

## 1.0 DESCRIPTION OF THE GENERATING FACILITY

This generation interconnection system impact study was performed in response to a request by Q0051 ("Interconnection Customer") for the addition of a 43-MVA synchronous machine for the steam turbine unit to be located near the Rowley 138-kV Substation. This substation is roughly 50 miles west of Salt Lake City and is connected to PacifiCorp's ("Transmission Provider") Terminal substation via a 56-mile long radial 138-kV line. The proposed unit will be used in conjunction with two existing 46.4-MVA synchronous machines and combustion turbine units to form a combined-cycle facility. The total net output of the combined cycle facility is 111 MW winter and 105 MW summer. The incremental increase in net capability associated with the steam turbine addition is 31 MW winter and 25 MW summer. The new steam turbine will be connected to Transmission Provider's existing 138-kV radial line, approximately 375 feet from the Rowley Substation, via a 27/45-MVA, 138/13.8-kV, wye-grounded (high), delta (low) step-up transformer. The impedance is 9% on a 27-MVA base. Note, the study was based a 36/48/60-MVA transformer, with an impedance of 10% on a 36-MVA base, as originally provided by Interconnection Customer. The change to the current characteristics of the step-up transformer (as described above) did not affect the results of the Study.

The Rowley 138-kV bus is tied through transformers to both the Interconnection Customer's facility (existing combustion turbines) and a large Transmission Provider industrial customer plant owned by US Magnesium LLC ("US Mag").

## 2.0 SCOPE OF THE STUDY

Due to the proximity of the proposed generation and the US Mag load being served across a relatively long radial line, the study results were quite sensitive to the represented load level at US Mag. Currently the US Mag load is typically around 85 MW with customer-owned internal generation producing approximately 20 MW. US Mag has indicated that their load will increase over the next year. The current forecasted load requiring service for the summer or fall timeframe of 2006 is expected to be around 116 MW. Separate studies currently underway have indicated that supplemental reactive support at or near Rowley may be required to serve the load additions by US Mag. The new generation by the Interconnection Customer will not alter the need for this additional reactive compensation, as it will be necessary when the Interconnection Customer's generation is not available. Since the addition of Interconnection Customer's two existing combustion turbines, the operational voltages in the vicinity of the Rowley Substation have been sensitive to the US Mag and Interconnection Customer operations. It is anticipated that the load and generator additions will exacerbate the problem of voltage control. Therefore, it was determined that the study scope should include an analysis of potential operational voltage problems and their mitigation.

In addition to study results being sensitive to the load level, the existing and estimated transformer tap settings and the coordination of voltage control between the Interconnection Customer's generating facility and US Mag generating units also showed similar affects on the study results. The tap settings for the transformer associated with the proposed unit were indicated by Interconnection Customer to be nominally 138/13.8 kV in the material presented

with the interconnection request; these setting were used in the study. These are the estimated operational settings and are the nominal bus voltages on either side of this transformer. The tap settings for the transformer serving the Interconnection Customer's existing combustion turbine units were indicated to be nominally 138/13.8 kV where the low side bus voltage is nominally 13.2 kV. These settings were also represented in the study as indicated.

The point of interconnection for the proposed generating unit, as mentioned, exists at the end of a relatively long radial 138-kV line. Due to limited stability concerns for this particular configuration it was determined that a dynamic simulation including the proposed unit was not necessary and, therefore, was not conducted.

## 3.0 TYPE OF INTERCONNECTION SERVICE

Interconnection Customer will interconnect as a Qualifying Facility (QF).

## 4.0 DESCRIPTION OF PROPOSED INTERCONNECTION

Figure 1 shows the proposed interconnection configuration for the new steam turbine generator. It includes a modification to the service to Interconnection Customer's existing combustion turbines and to US Mag. Transmission Provider's ownership of its existing 138-kV line to Interconnection Customer's site and US Mag will terminate approximately 375 feet from US Mag's Rowley Substation. A three-way switch, owned by Transmission Provider, will be installed at this location. The existing 138-kV line segment from the new three-way switch to Rowley Substation will be disconnected from Rowley Substation and sold to Interconnection Customer. Interconnection Customer will use the line segment to connect their existing combustion turbine step-up transformer to their new steam turbine step-up transformer, which, in turn, will be connected to the new three way switch via a new breaker. The Interconnection Customer's combustion turbine and steam turbine step-up transformers will each be protected by circuit switchers. Separately, US Mag will be connected to the three-way switch with a new 375-foot, 138-kV line segment.

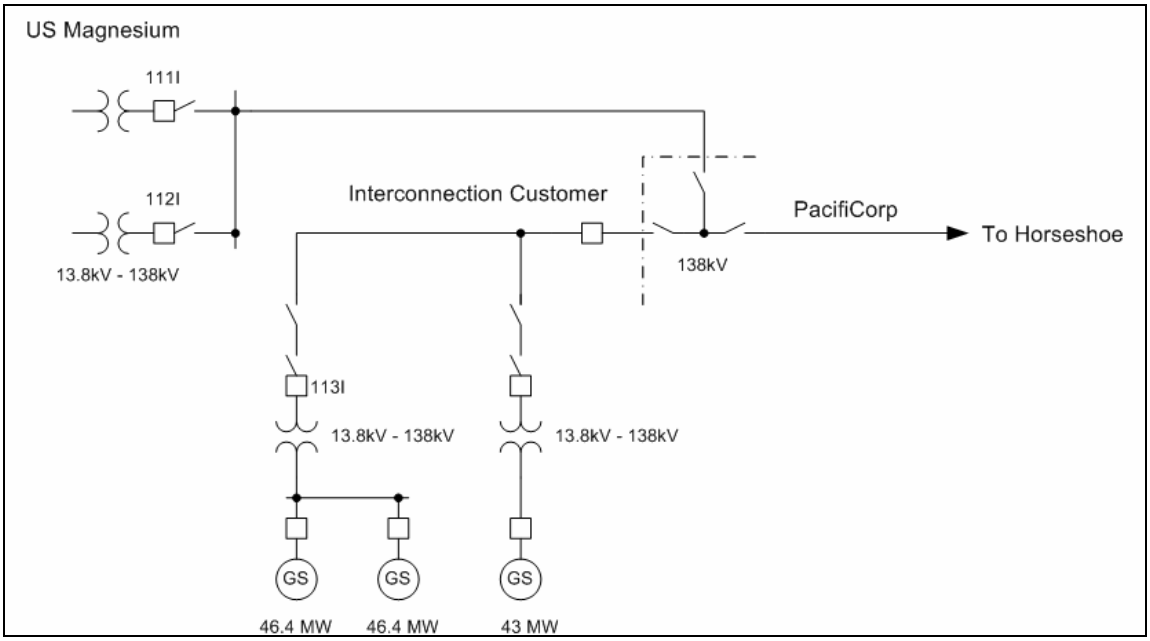


***Figure 1**: One-line Diagram - Interconnection Customer's Generating Facility and Vicinity (Showing New Configuration)*

## 5.0 SYSTEM IMPACT STUDY RESULTS

### *5.1 Analysis of Potential Operating Voltage Problems*

The study results identified a requirement for a coordinated operating plan with specific voltage requirements to control the reactive output of the Interconnection Customer's units and the US Mag units. Because of this, the study was conducted under the assumption that the three Interconnection Customer's units would have the ability to operate based on voltage control of the high-side Rowley 138-kV bus and have the operating plan be coordinated between these three units in order to avoid reactive power exchange between them.

This study was conducted using the target voltage level of 1.01-p.u. at the US Mag generation bus. This level is understood to be the desired operating level that best accommodates the existing US Mag and Interconnection Customer's facilities based on operating experience. This level was used to conduct the study.

#### 5.1.1 2005 US Mag Load Level (85 MW)

The first system configuration that was reviewed included 85 MW of load at US Mag with the Interconnection Customer's existing combustion turbine units and the proposed steam turbine unit at their maximum dependable capability output holding the Rowley 138-kV bus to 0.980-p.u. voltage. The reactive consumption on the Interconnection Customer units while holding this voltage level fell within acceptable levels at -0.2 MVAr apiece. However, this caused the units at US Mag to max out on their consumption of MVAr's while attempting to hold 1.01-p.u. voltage on the US Mag 13.8-kV bus. Both of the on-line units limited out at -4.9 MVAr. This

would not be an acceptable operating scenario as it would require the US Mag units to continuously operate at full MVAr consumption whenever the Interconnection Customer's units were on at high output. This situation is illustrated in the one-line power flow snapshot in Figure 2 below.

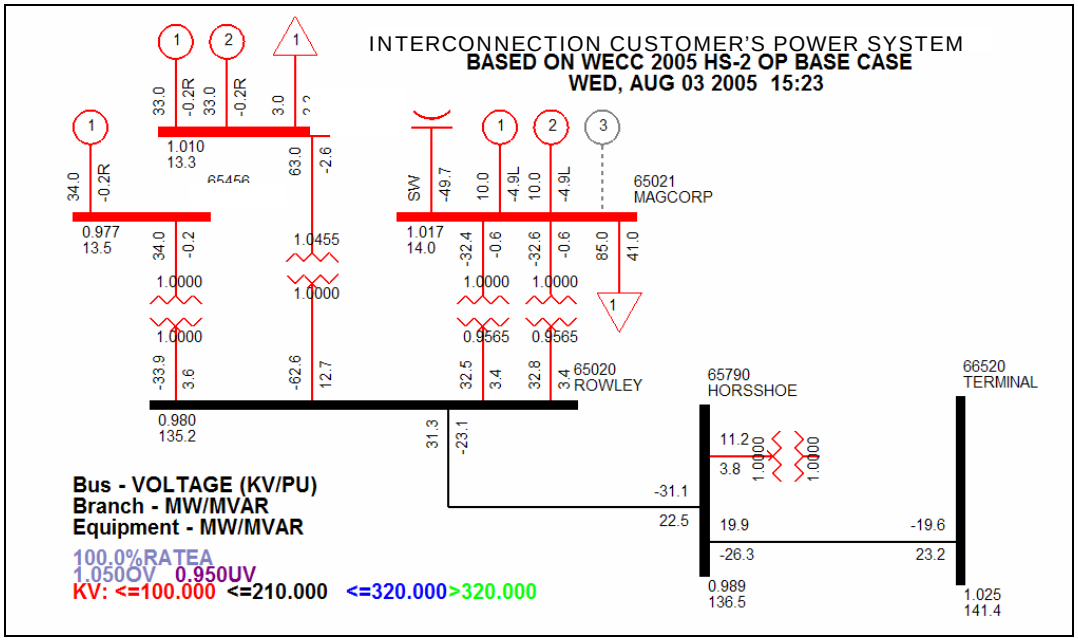


***Figure 2**: Interconnection Customer System Based on WECC 2005 HS-2 OP Base Case (Wednesday, August 03, 2005 15:23)*

The workable scenario of having Interconnection Customer generating at full output along with 85 MW of load at US Mag was reviewed. Setting the Rowley 138-kV voltage set point to 0.965 p.u. regulated by the Interconnection Customer's generators caused the US Mag units to lower their reactive power consumption to -1.1 MVAr which is an acceptable and sustainable level. The Interconnection Customer's proposed generator bus represented in Figure 3 below as '65456' dropped to a 0.950-p.u. voltage level. This is an undesirable level that should not be maintained for a long period of time. However, an adjustment in the tap settings of this transformer would raise this voltage to a more reasonable level thereby making it possible to operate the system under the described circumstances.

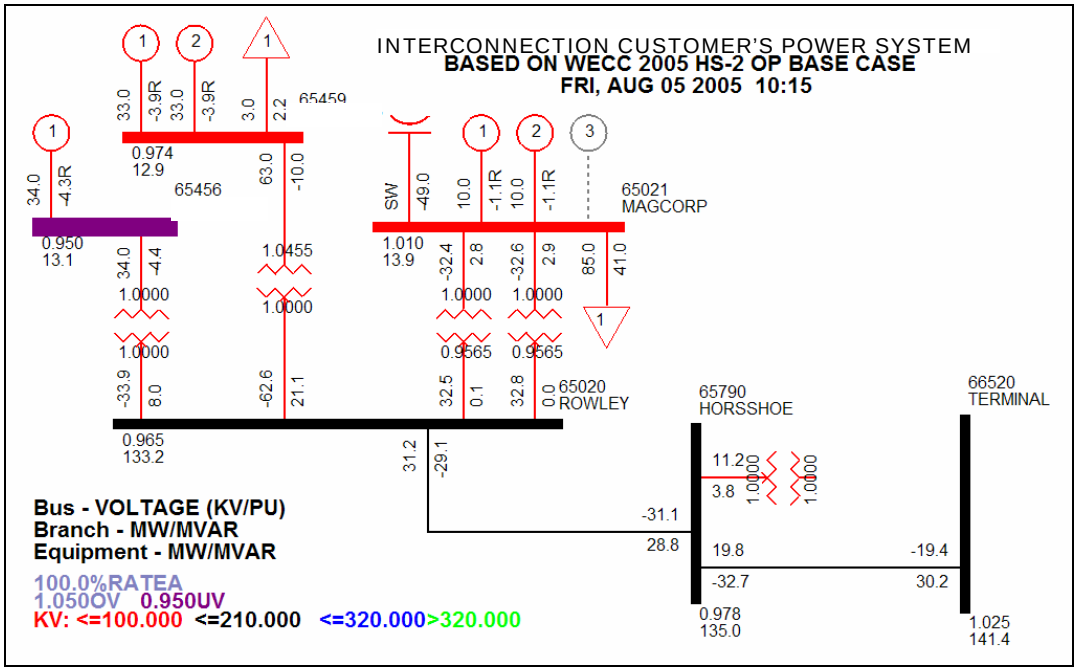


***Figure 3**: Interconnection Customer System Based on WECC 2005 HS-2 OP Base Case (Friday, August 05, 2005 10:15)*

Operating without the Interconnection Customer units and a load level of 85 MW at US Mag was reviewed. As illustrated in Figure 4 below, this did not result in any significant affects to the network or the customer load. The US Mag units settled to a moderate consumption of about -3.6 MVAr and were able to hold 1.01 p.u. on the 13.8-kV bus. This was the expected result as it depicts current operating conditions at US Mag today with no output from the Interconnection Customer units.

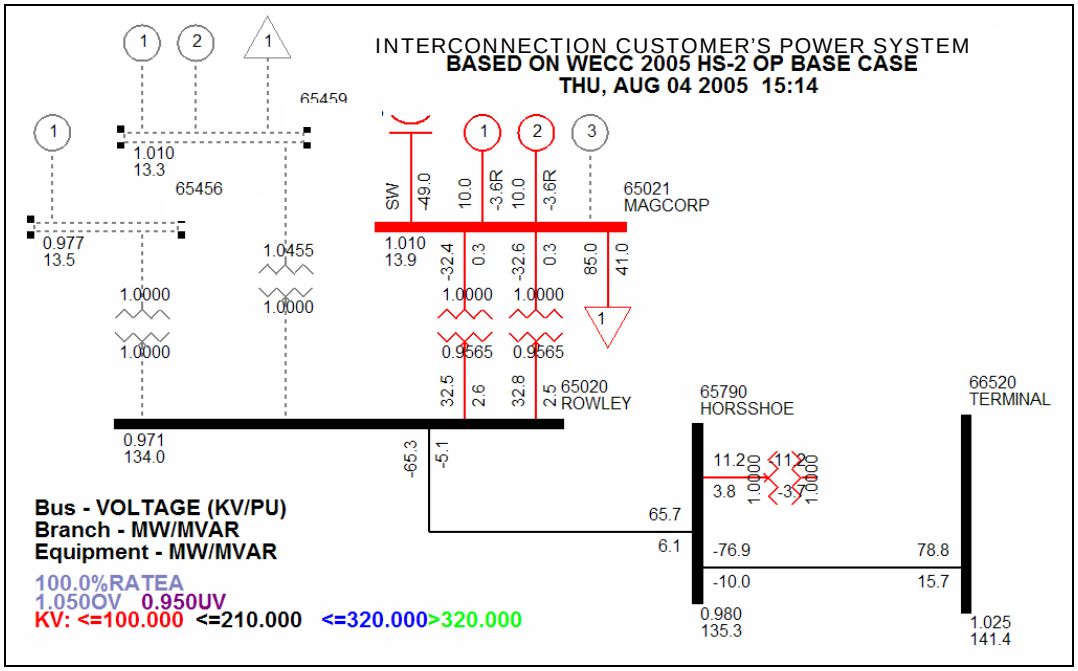


***Figure 4**: Interconnection Customer System Based on WECC 2005 HS-2 OP Base Case (Thursday, August 04, 2005 15:14)*

### 5.1.2 2006 Projected US Mag Load Level (116 MW)

Next, the US Mag load was set to 116 MW and the Interconnection Customer units were again set to full dependable output while holding 0.980-p.u. voltage on the Rowley 138-kV bus. In this situation the US Mag units and the Interconnection Customer units each provided from 2 to 4 MVAr and the target voltage on the Rowley 138-kV bus and the US Mag 13.8-kV bus were both met. This scenario depicts acceptable operating conditions for the Interconnection Customer units and the US Mag generation and load and is shown below in Figure 5.

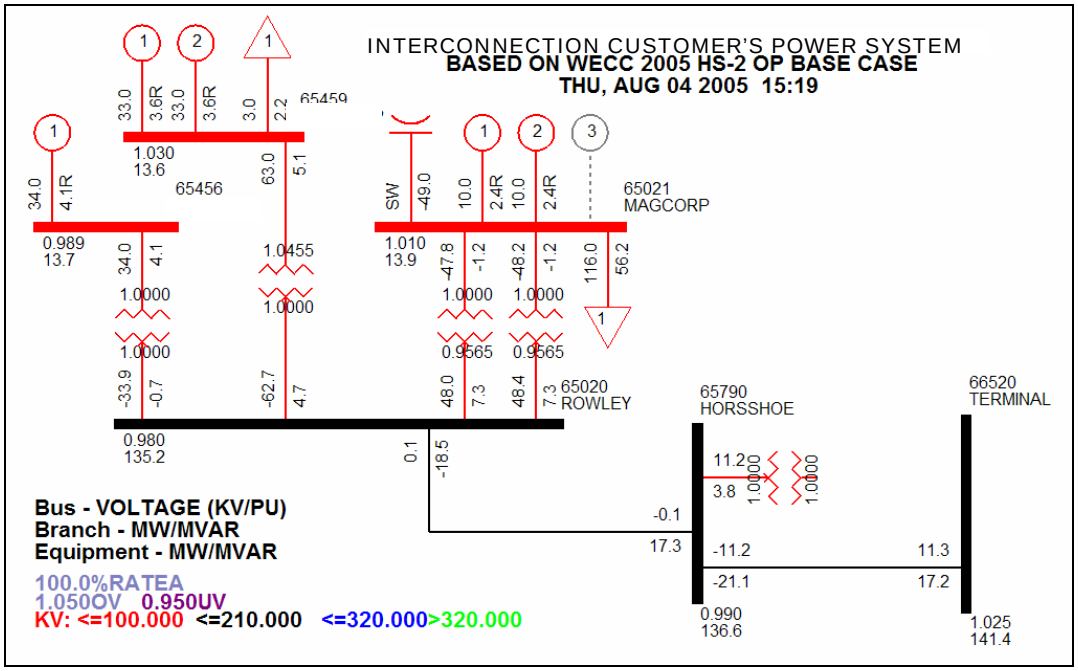


***Figure 5**: Interconnection Customer System Based on WECC 2005 HS-2 OP Base Case (Thursday, August 04, 2005 15:19)*

With the US Mag load at 116 MW and the Interconnection Customer units regulating the Rowley 138-kV bus to 1.0-p.u. voltage, a higher-than-acceptable voltage level resulted on the generation bus of the two Interconnection Customer combustion turbines. As shown in Figure 6 below, the Interconnection Customer combustion turbine bus reached 1.087-p.u. voltage while at the same time the US Mag units reached their maximum MVAr consumption capability at -4.9 MVAr. It would not be desirable to operate the Interconnection Customer combustion turbines or the US Mag units under these conditions and it illustrates the requirement to coordinate the voltage control and reactive exchange between all the generating units.

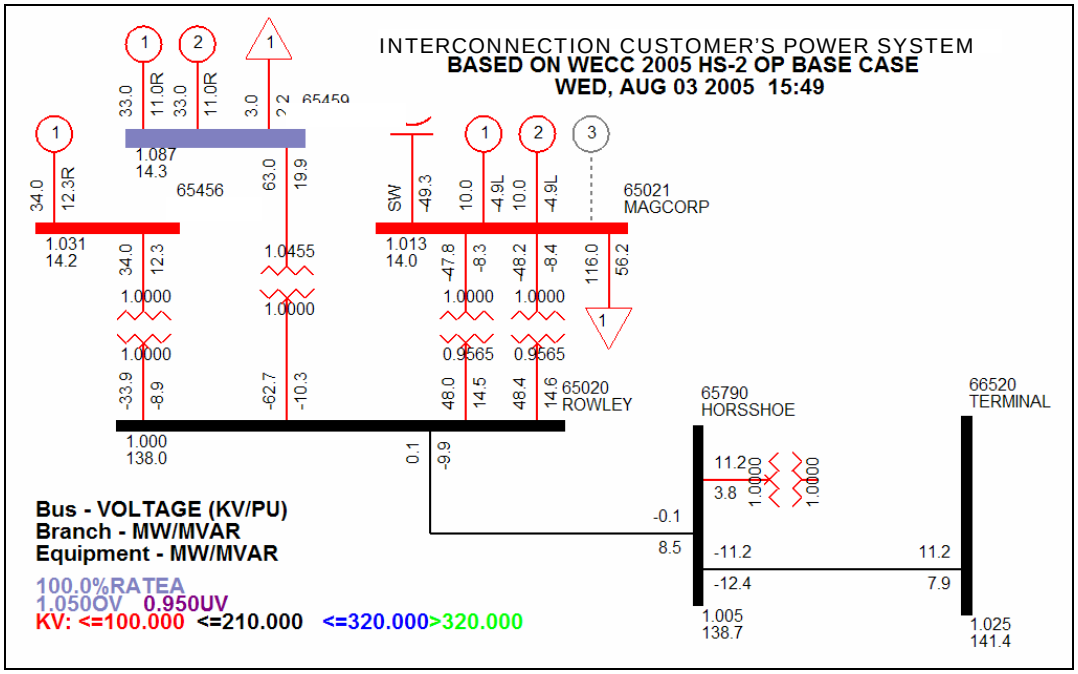


***Figure 6**: Interconnection Customer System Based on WECC 2005 HS-2 OP Base Case (Wednesday, August 03, 2005 15:49)*

Operation without the Interconnection Customer's units and only two US Mag units on-line resulted in unacceptable system conditions with a load level of 116 MW at US Mag. With the Interconnection Customer units off, the US Mag units reached their maximum reactive output capability at 9.9 MVAr which is shown in Figure 7. This showed the potential for operating problems with this load level at US Mag, which are currently under review in the Transmission Provider's Area Planning group as mentioned above.

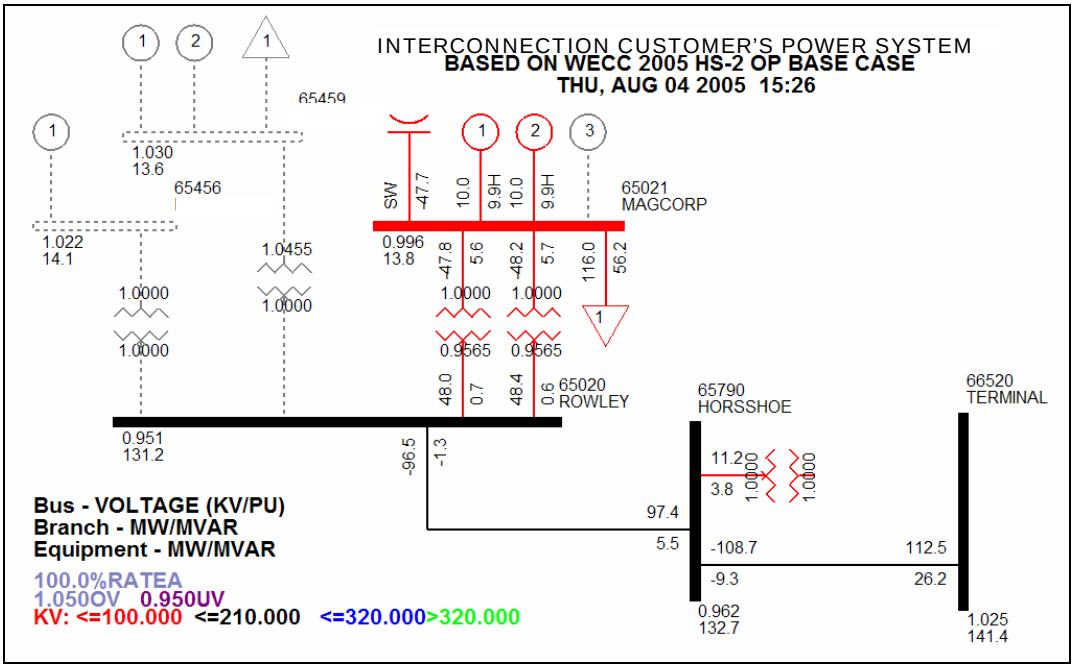


***Figure 7**: Interconnection Customer System Based on WECC 2005 HS-2 OP Base Case (Thursday, August 04, 2005 15:26)*

### 5.1.3 US Mag Facility Off-Line

The final scenario that was tested examined operation of the Interconnection Customer generating units at their maximum dependable capability at the same time the US Mag facility is off-line. Under these circumstances the study results showed no sign of any significant system impacts as illustrated in Figure 8 below. This situation was tested with the Interconnection Customer units holding the Rowley 138-kV bus voltage to 0.980 p.u., which caused the machines to consume approximately -3 MVAr each. While this is an acceptable level of reactive exchange for these machines it has an adverse affect on the amount of MVAr consumption from the system versus megawatts delivered. With the US Mag facility off-line and the Interconnection Customer units at full output, the study results showed that for the delivery of 82 MW at the Terminal 138-kV bus, 43 MVAr would be extracted from the system flowing in the opposite direction from Terminal toward Rowley.

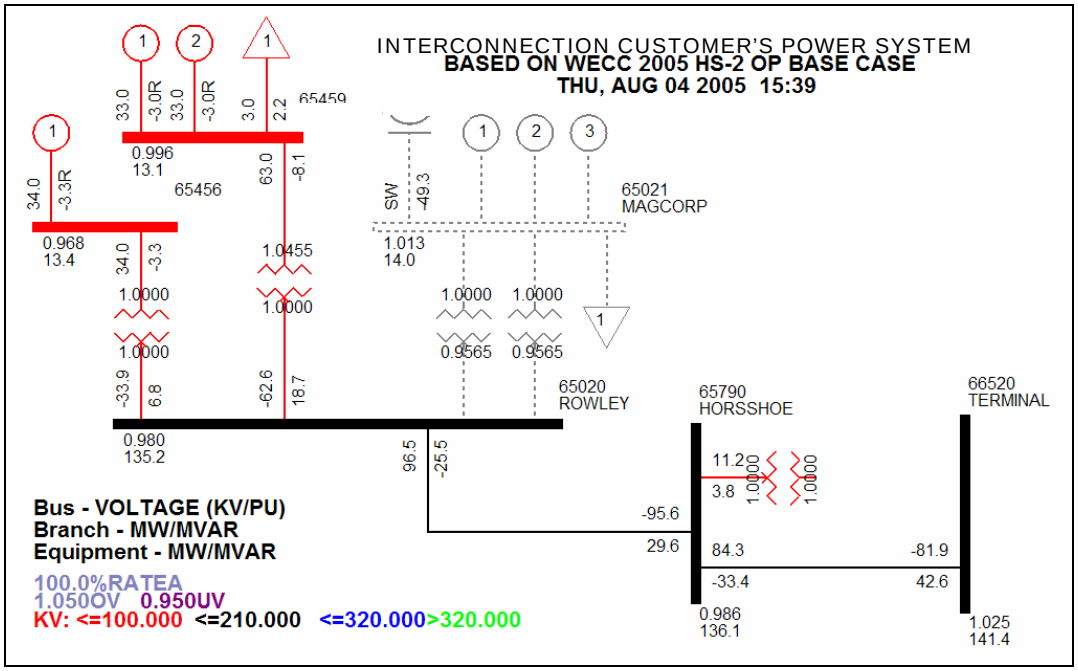


***Figure 8**: Interconnection Customer System Based on WECC 2005 HS-2 OP Base Case (Thursday, August 04, 2005 15:39)*

With the Interconnection Customer units holding 1.0-p.u. voltage on the Rowley 138-kV bus and the US Mag facility off-line there was some improvements in the megawatts delivered versus MVAr consumed at Terminal. With this voltage level at Rowley, there were 33 MVAr flowing from Terminal toward Rowley with the same amount of 82 MW being delivered at Terminal which can be seen in Figure 9 below. Despite this improvement, given the settings of generation step-up transformers this would not be suitable due to the higher-than-acceptable voltage level on the combustion turbine generation bus.

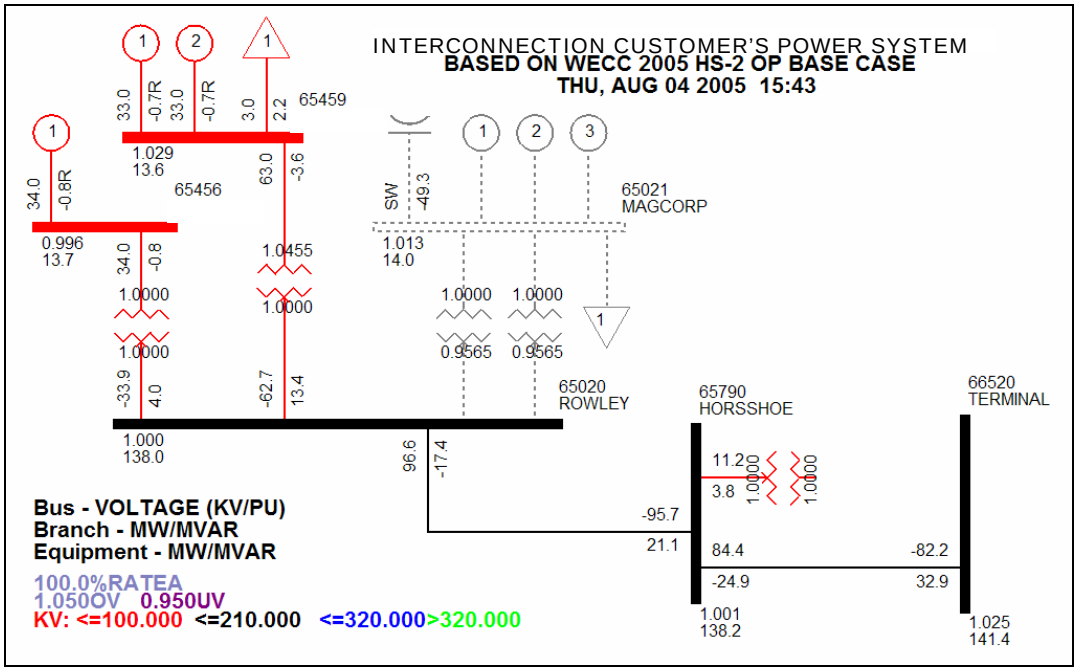


***Figure 9**: Interconnection Customer System Based on WECC 2005 HS-2 OP Base Case (Thursday, August 04, 2005 15:43)*

## *5.2 Requirements*

Due to the likelihood of a reactive power exchange between the Interconnection Customer units and the US Mag units there must be a coordinated effort between the two facilities to set appropriate transformer tap settings, voltage control levels, and reactive exchange requirements. Therefore, prior to the interconnection of the proposed new steam generating unit to the system, the following requirements must be met by the Interconnection Customer, US Mag, and Transmission Provider.

### 5.2.1 Interconnection Customer Operating Requirement

Transmission Provider will require that whenever any of the Interconnection Customer's generation is on-line, the unit(s) must operate to control the 138-kV voltage between 134 kV (0.971 p.u.) and 138 kV (1.00 p.u.). This proposed operating requirement is based on study results that are not verifiable at this time due to the lack of voltage metering equipment in the area of the interconnection. Therefore, modification of the operating requirement may be necessary following the installation of voltage monitoring equipment associated with the interconnection. The requirement will also be subject to review/change as any system changes take place which may have an affect on the network conditions in the area.

A Power System Stabilizer (PSS) must be installed and operational for the two existing combustion turbines and the new steam turbine generators prior to commercial operation. This is required because the total connected MVA will exceed 75 MVA, as outlined by WECC.

Complete Generator data for the Interconnection Customer units must be obtained and submitted to Transmission Provider in order for accurate power flow and dynamic models to be prepared. The data is required by WECC for accurate modeling of the electro-mechanical dynamics of the regional power system. The missing data, which has been previously requested, will need to be provided prior to commercial operation. This data includes: (1) PSS block diagram and settings for the steam turbine; and (2) settings for combustion turbine excitation system block diagram and PSS block diagram.

In general, the data requirements include:

- Complete generator data including generator saturation curves that is compatible with the generation models provided in the Western Electricity Coordinating Council (WECC) GE PSLF data base. Generator inertia data must include generator, turbine, and (if appropriate) exciter inertia. (See note below).

- Complete excitation data that is compatible with models provided in the WECC GE PSLF data base. (See note below.)

- Complete PSS data that is compatible with models provided in the WECC GE PSLF data base. (See note below.)

- Complete governor and turbine data that is compatible with models provided in the WECC GE PSLF data base. (See note below.)

- Note: WECC GE PSLF data base model descriptions are available from the WECC staff office in Salt Lake City. Transmission Provider's Transmission System Planning can assist Interconnection Customer in obtaining information on available WECC GE PSLF models.

### 5.2.2 Transmission Modifications

See Section 4.0, "Description of Proposed Interconnection", for a discussion on the transmission modifications required for interconnection of the generating facilities.

### 5.2.3 Existing Breaker Modifications – Short-Circuit

A fault analysis was performed to determine if the addition of the 43-MVA generator fed through a 9.99% impedance 36-MVA self-cooled rated 138 – 13.2-kV transformer would increase the fault duty in the area above the interrupting rating of any fault interrupting device. The study showed that in the unlikely event that a three-phase fault was to occur on the 138-kV side of either of the 138 – 13.2-kV US Mag transformers the fault current through the existing circuit switchers would be slightly above the circuit switchers' interrupting rating. The fault current would be 4009A and the circuit switchers have a rating of 4000A. This is an issue

between US Mag and Interconnection Customer. No other fault interrupting device will be over-dutied as a result of the addition of the Interconnection Customer generation.

Note, in reference to Section 1.0, the recent change in steam turbine step-up transformer impedance will decrease the short-circuit current delivered from the steam turbine to the Transmission Provider system. Therefore, Transmission Provider continues to anticipate no need to upgrade existing interrupting devices.

#### 5.2.4 Protection Requirements

The protection system will be reconfigured to support the new configuration shown in Figure 1. The requirements are discussed later in this report in Section 6.1.2 of the Scope of Work.

#### 5.2.5 Data Requirements (RTU)

The SCADA system, including RTUs, will be reconfigured to support the new configuration shown in Figure 1. The requirements are discussed later in this report in Section 6.1.4 of the Scope of Work.

#### 5.2.6 Metering Requirements

The metering requirements are discussed later in this report in Section 6.1.6 of the Scope of Work.

#### 5.2.7 Communication Requirements

The communication requirements are discussed later in this report in Section 6.1.3 of the Scope of Work.

### *5.3 System Impact Study Conclusions*

1. Transmission Provider's ownership of the existing 138-kV line to Interconnection Customer's and US Mag's sites will terminate approximately 375 feet from US Mag's Rowley Substation. A three-way switch, owned by Transmission Provider, will be installed at this location. The existing 138-kV line segment from the new three-way switch to Rowley Substation will be disconnected from Rowley Substation and sold to Interconnection Customer. Note the sale of the asset must be approved by Transmission Provider's management. Interconnection Customer will use the line segment to connect their existing combustion turbine step-up transformer to their new steam turbine step-up transformer, which in turn, will be connected to the new three-way switch via a new breaker. The Interconnection Customer's combustion turbine and steam turbine step-up transformers will each be protected by circuit switchers.

2. Separately, US Mag will be connected to the three-way switch with a new 375-foot, 138-kV line segment.

3. A power flow analysis was used to establish that whenever any of the Interconnection Customer generation is on-line, the unit(s) must operate to control the 138-kV voltage between 134 kV (0.971 p.u.) and 138 kV (1.00 p.u.). These voltage targets are estimates based on studies and may be revised as necessary.

4. A short-circuit analysis determined that existing breakers in the area will not be affected by increased short-circuit duty caused by the steam turbine generator.

5. Protection, metering, SCADA and communications modifications and additions will be required.

6. Transmission Provider requires that Interconnection Customer install Power System Stabilizers on its two existing combustion turbine generators and on its new steam turbine generator.

7. Transmission Provider requires that Interconnection Customer provide the following data that Transmission Provider will use for modeling: (1) PSS block diagrams and settings for the steam turbine; and (2) settings for the combustion turbine excitation system block diagram and for the PSS block diagram.

### *5.4 Participation by Affected Systems*

Transmission Provider considers US Mag an Affected System. They will be sent a copy of this report.

## 6.0 FACILITIES STUDY RESULTS

The following outlines the scope, cost, and schedule of designing, procuring, and installing, and testing Interconnection Customer's steam turbine substation, as well as upgrades to be performed at US Mag's Rowley Substation.

### *6.1 Scope of Work*

#### 6.1.1 Substation – Interconnection Customer's Site/Rowley Substation

*All work to be completed by Interconnection Customer.*

Interconnection Customer shall be responsible to for the design, procurement, installation, and testing of all materials and equipment required for the breaker and switches to be installed at its new Steam Turbine Substation prior to interconnection of the additional 31 MW (25 MW Summer) generation at the facility to the 138-kV system near Rowley Substation.

Interconnection Customer shall provide operational design drawings to Transmission Provider for review. The equipment shall be designed and built to meet Transmission Provider's standards, specifications, and practices for such facilities connecting to its 138-kV transmission system.

The breaker at Interconnection Customer's substation shall be equipped with the following:

- Maximum fault clearing time of 3 cycles
- Two current transformer (CT) sets, one for each of the line relays
- CT rated at the load rating of the breaker
- Relay accuracy CT C800
- CT are cabled into the control house with one 4 conductor #10 Cu wire in shielded cable per CT
- Breaker failures relay protection on each breaker.

### 6.1.2 Protection & Control – Interconnection Customer's Site/Rowley Substation

*Work to be completed by both Interconnection Customer and Transmission Provider.*

**Interconnection Customer will be responsible for:**

Interconnection Customer shall develop the design drawings and install the cabling between the potential transformers, current transformers, circuit breaker's control circuits, and the protection & control panel. In addition, Interconnection Customer shall provide ungrounded 125VDC circuits for powering the equipment on the protection & control panel.

Interconnection Customer shall provide a three-phase set of 138-kV potential transformers (PT) or capacitive coupling potential devices on the 138-kV line to Horseshoe Substation. The PTs shall be connected line-to-ground on the line to Interconnection Customer's site or on a location on the bus that is energized anytime any one of the generators are connected to the system. Three-phase, 67-volt line to neutral shall be cabled into the control house using #10 Cu conductors in a shielded cable.

The control cable used from the equipment in the yard into the Transmission Provider-provided protection & control panel inside the control house shall be multi-conductor shielded cable as specified in Transmission Provider's standard ZS 071-1997. The control cable used for inter-panel wiring inside the control house shall be non-shielded cable as specified in Transmission Provider's standard ZS 072-1997.

The CT circuits shall be connected using 4-conductor #10 shielded cable as specified in Transmission Provider's standard ZS 071-1997.

The existing set of directional over current relays (JBC) in Rowley Substation will remain in-service but the CT circuit from the existing Interconnection Customer's 138–13.8 kV transformer will be disconnected from the relay circuit and the CT's secondary shorted. The trip circuit from these relay will be lifted from the Interconnection Customer's breakers. These relays will continue to trip the US Mag generator breakers.

The existing transfer trip receiver will be returned to service and will be wired to trip the new Interconnection Customer's 138-kV tie breaker as well as the US Mag generator breakers.

**Transmission Provider will be responsible for:**

Transmission Provider shall provide the design and procurement of the line protection and over/under frequency protective relays. Interconnection Customer will provide installation of all Transmission Provider-procured materials and equipment required for protection and control of the 138-kV line and breaker to be installed at the Interconnection Customer's facility.

The design will include a panel containing two relay systems.

Also, on the panel will be a GPS satellite clock to provide accurate time tagging of the relay event records, a modem and a data switch to access the fault records from the relays using a voice grade channel.

Transmission Provider will supply the panel, documentation for the panel, the relay settings, and test the relays prior to them being placed in-service.

### 6.1.3 Communications – Interconnection Customer & US Mag (Rowley) Substations

*Work to be completed by Transmission Provider.*

The existing communications scheme (MAS radio) does not support MWh pulse information to be transmitted back the Transmission Provider's control center (SCC). Therefore, a new 960-MHz Microwave Data System (MDS) will be required to accommodate the data transfer for the new generator and any existing generators. This system will include fractional T1 microwave equipment at Interconnection Customer's site, Farnsworth Peak, and Terminal Substation. An intermediate repeater site, Questar's microwave site on Farnsworth Peak, will be required as part of the complete line of site radio communications path: Interconnection Customer's Substation to Farnsworth Peak and Farnsworth Peak to Terminal Substation. The Farnsworth Peak (Questar) site will require a lease and assumes antennas will be mounted on the existing tower and the equipment will be mounted in the Questar building. Equipment at Farnsworth Peak includes a Coastcom D/I Mux III digital multiplex with a voice circuit for troubleshooting.

A new forty-foot tower will be required to mount the antenna at the Interconnection Customer's site, the Terminal Sub antenna can be mounted on the existing tower.

Frequencies will need to be licensed for the communications equipment.

Additionally, communications equipment is required to accommodate the line protection between the Interconnection Customer Substation and Terminal Substation, using mirrored bits technology. A Coastcom D/I Mux III digital multiplex will be installed at the Interconnection Customer's site, Terminal Substation and SCC. This digital mux will also provide dial-up access to the relays, meters, and voice communication for troubleshooting.

A 48-VDC battery and charger system located in the generation control building at the Interconnection Customer's site are required to support the communications equipment described, for 24 hours.

Also, the net MW out of Interconnection Customer's generating facility into Transmission Provider's system must be telemetered to an alternate control center for backup to SCADA. This will be accomplished with a new RFL analog transmitter at Interconnection Customer's site and a new RFL analog receiver at Sigurd substation.

### 6.1.4 SCADA – Interconnection Customer's Site/Rowley Substation

*Work to be completed by both Transmission Provider & Interconnection Customer, as noted.*

**Transmission Provider will be responsible for:**

A new D20 SCADA RTU will be designed, procured, and installed by Transmission Provider for MW, MVAR and MWh data with a 4-wire communications circuit to the Salt Lake Control Center to meet EMS data requirements.

Transmission Provider will provide an RTU that is mounted on a 19-inch rack, configured and wired to interface terminal blocks to be located inside the Interconnection Customer generation control building.

The status and data from the Interconnection Customer's combustion turbine generators currently connect to the Rowley Substation RTU will be moved to the new Interconnection Customer RTU. All SCADA programming changes required to support moving the Interconnection Customer points from the existing Rowley RTU to the new RTU will be by Transmission Provider.

RTU Points Required *(Note: this is not a detailed points list, but only a general overview)*:

- Status of the 138-kV breaker.
- Status of the two 138-kV circuit switchers
- Status of the three 13.8-kV breakers
- Alarm for line relay problems

- Gross Generation (MW, MVAR) for each of the three generators
- Note, total net generation (MW, MVAR) is also required, but it can be picked up from the bi-directional revenue meter. The total net generation will be required for delivery to the control center as real time data.
- 138-kV bus voltage measured at the Interconnection Customer side of the switch on the interconnecting line.
- MWh pulse accumulators for net energy flow across the tie breaker

**Interconnection Customer will be responsible for:**

- Assisting in the check out of all analog or digital points originating from their equipment.
- Providing any scaling information as required for points originating from their equipment.
- Providing and installing all plant status points as detailed above brought to the new Transmission Provider RTU interface terminal block in the steam turbine substation. The analog points to the RTU shall be 0-1 mA.
- Providing and installing cable for the voltage outputs from the Transmission Provider 138-kV interconnecting line protection panel to the new Transmission Provider RTU.

### 6.1.5 Transmission – Interconnection Customer Site/Rowley Substation

*All work to be completed by Interconnection Customer*

Interconnection Customer will engineer, procure and construct the reconfiguration of Transmission Provider's 138-kV line interconnecting existing Interconnection Customer's combustion turbines and US Mag Rowley Substation. Transmission Provider ownership of the line will be terminated about 370 feet from the Rowley Substation (and Interconnection Customer's combustion turbine interconnection), at a new pole and three-way switch, which Transmission Provider will own. Transmission Provider will sell this existing line section to Interconnection Customer.

The existing line will be disconnected from the Rowley Substation and used to connect Interconnection Customer's existing combustion turbine substation to its new steam turbine substation, at 138-kV. Then, all three generators will be connected through the three way switch at 138 kV, via a new circuit breaker, to be owned and maintained by Interconnection Customer.

Rowley Substation will be reconnected to Transmission Provider's system at the new three-way switch, via a new 138-kV line, parallel to the existing line. US Mag will own this new section.

Interconnection Customer will hire a Transmission Provider-approved engineering and construction contractor to provide the design, procurement and installation of all the materials and equipment required to complete the addition of the pole and three-way switch interconnection point to Interconnection Customer generation facility to the 138-kV system.

Transmission Provider's standard will be provided and Transmission Provider will review and approve the design, prior to procurement, and the installation, prior to energization.

### 6.1.6 Metering – Interconnection Customer Site/Rowley Substation

*Work to be completed by both Transmission Provider and Interconnection Customer, as noted.*

**Transmission Provider will be responsible for:**

Provide the revenue meter panel design package for the 138-kV (high side) metering.

Provide instrument transformer specifications.

Engineer the interconnection metering design between the new revenue metering panel and the existing Rowley metering panels.

Secondary wiring requirements between primary metering transformers and Rowley substation.

Acceptance testing of meter panel prior to shipment to Rowley substation.

**Interconnection Customer will be responsible for:**

The procurement and installation specified by Transmission Provider of the primary 138-kV instrument transformers.

The procurement and installation of the Transmission Provider-designed metering panel. The procurement includes all panel equipment accessory items as specified. GE Supply is the preferred supplier of the meter panel other suppliers may be used but panel wiring contractor must be located in SLC. Panel pre-wiring in SLC is necessary for acceptance testing of revenue panel digital and analog outputs prior to delivery to site.

As specified by Transmission Provider, the procurement of the L&G 2510 meters. The meters shall be shipped to the SLC engineering office for programming and acceptance testing. If meters pass acceptance tests, Transmission Provider will deliver to wiring contractor.

At Rowley provide and install all interposition wiring between metering panels. Provide and install secondary wiring between instrument transformers, junction box and meter panels using shielded and color coded wire as specified by Transmission Provider.

<u>Interconnection Point</u>:
Stand alone revenue metering is required to be installed on the 138-kV (high side) of the power transformer, breaker metering is not acceptable.

The metering CT/VT instrument transformers shall be manufactured by Ritz and be a combination KOTEF145 – ER wye connected design. Expect 25 weeks delivery time once PO is completed. The current transformers shall be extended range for high accuracy metering with a 500/ 5 ratio, RF 1.5 and the fault duty to be determined after study is completed. The VT ratios shall be 700/1 for 138 kV connected metering Revenue metering design will include two meters at the interchange point, expect 12 weeks delivery time once PO is completed. The meters will measure delivered MWh and MVARH (Q1&Q2), for received MWh and MVARH (Q3&Q4) generation received quantities. The metering design for the interchange will include two L&G 2510 meters with both DNP and analog output boards. The primary meter will be used for SCADA and revenue MV-90 dialup data. A backup meter is required for telemetry and secondary dialup data.

The SCADA accumulator MWh and MW and MVAR quantities will be defined as delivered (OUT), or positive (+) and received (IN) or negative (-). The telemetry requirement will be MW only and provided to the backup data communication system. Hardwire cable or fiber will be required for all the metering outputs and must be run from the metering compartment to the Transmission Provider RTU.

Generation Metering (New Facility):
The Interconnection Customer-proposed measurement and control systems building where the steam turbine generator is to be located will be designed using indoor switchgear. The generator metering instrument transformers may be located in the switchgear but must be .3% metering accuracy. The voltage instrument transformers for the generation metering can be either open delta 14,400 -120 (120/1 ratio) or wye connected 8400/14560 (70/1 ratio). The .3% CT's for the 43-MVA generator should have a ratio of 2000/5 with a minimum rating factor of 1.5.

The metering design for the generator will include one L&G 2510 meters with both DNP and analog output boards. Transmission Provider will supply specifications and programming for the meter and Interconnection Customer will order and install meter. The meter will be used for SCADA and revenue MV-90 dialup data. The SCADA accumulator MWh and MW and MVAR quantities will be defined as delivered (OUT) or positive (+) and received (IN) or negative (-). Hardwire cable or fiber will be required for all the metering outputs and must be run from the metering compartment to the Transmission Provider RTU.

Generation Metering (Existing Facility):
Additional metering is required to be added to the existing generators for telemetry requirements. The metering design for each generator will include one L&G 2510 meters with both DNP and analog output boards. Transmission Provider will provide specification and programming for the meter in the existing panel. Hardwire cable or fiber will be required for all the metering outputs and must be run from the metering compartment to the Transmission Provider RTU.

Auxiliary Station Load Metering (New Facility):
The auxiliary metering instrument transformers may be located in the switchgear but must be .3% metering accuracy. Once Interconnection Customer defines it load requirements then the

instrument transformers can be specified. Transmission Provider will require wye connected metering where the CT full load ratios must be within 20% of actual station load.

The preferred meter location is near the RTU using a switchboard 12-panel design, but a socket installation is acceptable if there are facilities available to terminate the meter outputs. Transmission Provider will supply specifications for the switchboard meter panel.

The meters will measure delivered MWh and MVARh (Q1&Q2) for standard customer retail sales. The metering design for the auxiliary load service will include one L&G 2510 meters with both DNP and analog output boards. The meter will be used for SCADA and revenue MV-90 dialup data.

Auxiliary Station Load Metering (Existing Facility):
Additional metering is required to be added to the existing generators for telemetry requirements. The metering design for the auxiliary load will include one L&G 2510 meters with both DNP and analog output boards. Transmission Provider will supply specifications and programming for the meter in the existing panel. Hardwire cable or fiber will be required for all the metering outputs and must be run from the metering compartment to the Transmission Provider RTU.

Phone Lines:
A new dedicated dial-up phone line is required to be supplied by the customer for all meters via the MV-90 translation system. Where there are multiple meters at a location only one phone line is needed. It is not possible to use the existing phone line inside the Rowley substation for additional metering.

### *6.2 Cost Estimate*

See attached Pricing Schedule (Appendix A).

### *6.3 Schedule Estimate*

See attached Construction Milestone Dates (Appendix B).

Please note that the schedule is driven by the date that the Large Generator Interconnect Agreement is signed. Changes in this date affect the entire schedule.

# APPENDIX A – PRICING SCHEDULE

Cost Estimate for Transmission Provider's Scope of Work

Interconnection Customer Site/Rowley Substation
Metering, Protection & Control and Communications

| | | |
|---|---|---|
| Engineering / Project Management | $ | 44,709 |
| Materials | | 137,882 |
| Installation – Transmission Provider | | 28,886 |
| Installation – Contract | | 43,650 |
| Overhead | | 29,340 |
| AFUDC | | 9,387 |
| **Total** | **$** | **293,854** |

Farnsworth Peak Microwave Site
Communications Upgrades

| | | |
|---|---|---|
| Engineering / Project Management | $ | 20,665 |
| Materials | | 52,741 |
| Installation – Transmission Provider | | 11,430 |
| Installation – Contract | | 14,532 |
| Overhead | | 11,427 |
| AFUDC | | 3,655 |
| **Total** | **$** | **114,450** |

Terminal Substation
Communications Upgrades

| | | |
|---|---|---|
| Engineering / Project Management | $ | 14,178 |
| Materials | | 38,475 |
| Installation – Transmission Provider | | 9,671 |
| Installation – Contract | | 10,031 |
| Overhead | | 8,321 |
| AFUDC | | 2,662 |
| **Total** | **$** | **83,338** |

Salt Lake Control Center
Communications Upgrades

| | | |
|---|---|---|
| Engineering / Project Management | $ | 8,180 |
| Materials | | 1,297 |
| Installation – Transmission Provider | | 2,638 |
| Installation – Contract | | 0 |
| Overhead | | 1,394 |
| AFUDC | | 446 |
| **Total** | **$** | **13,955** |

Sigurd Substation
Communications Upgrades

| | | |
|---|---|---|
| Engineering / Project Management | $ | 3,781 |
| Materials | | 986 |
| Installation – Transmission Provider | | 1,758 |
| Installation – Contract | | 0 |
| Overhead | | 750 |
| AFUDC | | 240 |
| **Total** | **$** | **7,515** |

***Project Totals***

| | | |
|---|---|---|
| Engineering / Project Management | $ | 91,513 |
| Materials | | 231,381 |
| Installation – Transmission Provider | | 54,383 |
| Installation – Contract | | 68,213 |
| Overhead | | 51,232 |
| AFUDC | | 16,390 |
| **Total** | **$** | **513,112** |

# APPENDIX B – MILESTONE SCHEDULE

| *Milestone* | *Date* |
|---|---|
| Transmission Provider Commences Engineering Activities under Engineering & Procurement Agreement | February 1, 2006 |
| Security Document Due from Interconnection Customer | Upon Execution of the LGIA |
| Transmission Provider Commences Ordering Major Equipment | April 1, 2006 |
| Authorization to Proceed with Construction Due from Interconnection Customer (See Article 5.6.3 of LGIA) | June 1, 2006 |
| Complete Construction & Testing | August 1, 2006 |
| In-Service Date (Back Feed) | September 1, 2006 |
| Initial Synchronization Date | Customer to Provide |
| Commercial Operation Date | Customer to Provide |