Generation Interconnection

Feasibility Study Report

for

Q0044

interconnection at

Utah County Utah

on

PacifiCorp's Transmission System
(138 kV Transmission System)

September 15, 2004

1.0 Description of the Generating Facility

The Q0044 ("Interconnection Customer") Generating Station is a two-on-one natural gas-fired combined cycle facility with a net MW rating of 535 MW in Summer (166 MW for each gas turbine and 203 MW for the steam turbine) and 567 MW in Winter (173 MW for each gas turbine and 222 MW for the steam turbine). This study considers interconnection of the facility located at a site on Geneva Steel property in Section 6 (T6S, R2E) to PacifiCorp's ("Transmission Provider") existing 138 kV transmission system. An alternate Point of Interconnection, at 345 kV, is being considered as a separate interconnection request, and study. The project has an on-line date of May 15, 2007.

The proposed generating facility and switchyard will be located approximately one-half mile west of the existing Timp-TriCity 138 KV transmission line.

2.0 Scope of the Study

This is a Feasibility Study under the new FERC Order 2003-A Large Generation Interconnection Procedures. As part of this study, the network enhancements necessary to integrate this project as a Network Resource are identified. These are listed in Section 4.2.9 and for informational purposes only. They are subject to change as more detailed studies are performed.

A potential Affected System is the City of Provo, Utah, a member of Utah Municipal Power Agency (UMPA). This Affected System and UMPA participated in the Scoping Meeting held on May 25, 2004. A draft version of this Report will be shared with these parties to give them an opportunity to add their comments. Transmission Provider will make a reasonable effort to address the comments in the next study – the Impact Study.

3.0 Type of Interconnection Service

The Interconnection Customer has selected Energy *Resource (ER)* Interconnection Service.

4.0 Interconnection Alternative – Tie into 138 KV system between Timp and TriCity substations.

4.1 Description of Proposed Interconnection

The existing single circuit 138 kV Timp to TriCity line will be re-built as a double circuit line with larger conductors, and will be looped in and out of a new 138 kV switchyard to be constructed adjacent to the generating site. The switchyard will be approximately one-half mile west of the existing transmission line. The generating station's three step-up transformers will each have a separate connection to the new switchyard.

4.2 Requirements, Cost, Schedule for ER Interconnection Service

4.2.1 Transmission Modifications

The Interconnection Customer's generation plant will be connected to Transmission Provider's 138 kV transmission system with a new switchyard, which will operate as a breaker-and-a-half scheme.

Figure 1 depicts the transmission interconnection substation required for ER service. The solid lines show what is needed for the Interconnection Customer's plant as planned. Interconnection will require rebuilding the existing Timp-TriCity 138 kV line to a double circuit and looping it into the new Interconnection Customer's Switchyard. The two circuits from Interconnection Customer's facility to TriCity will require larger conductors than the circuits from Interconnection Customer's facility to Timp. The cost of these changes will be charged to the interconnection.

Figure 1

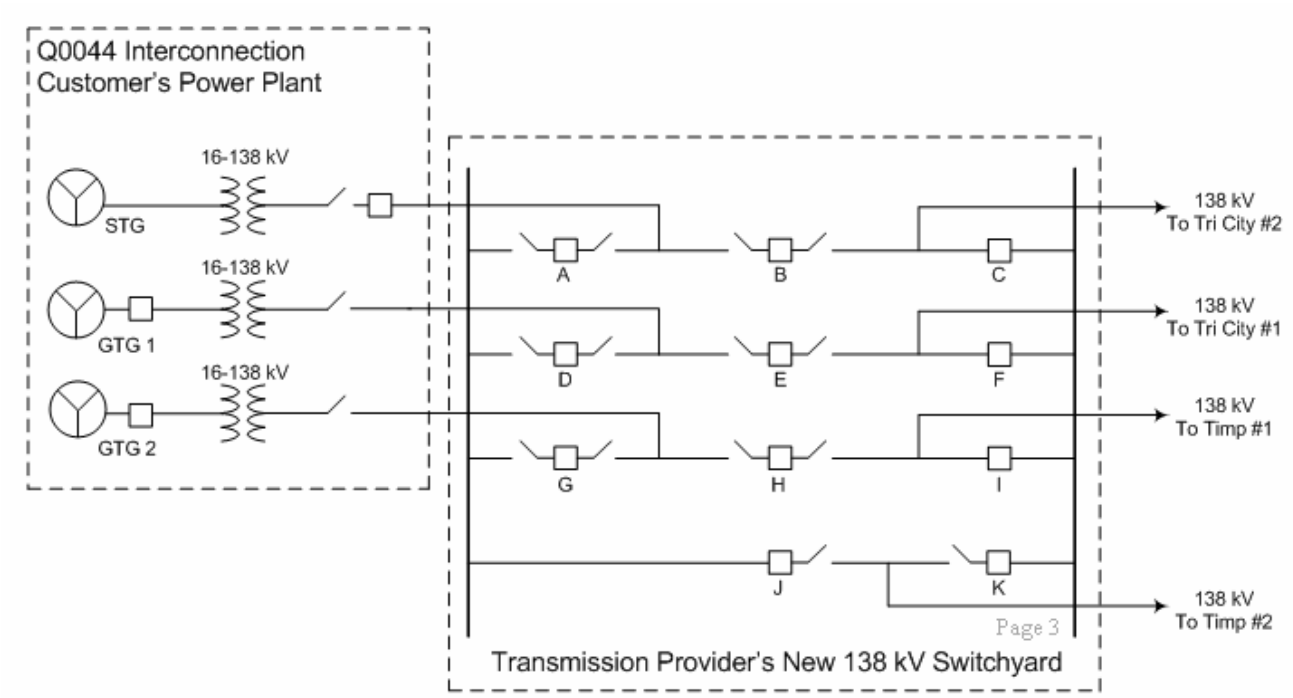

4.2.2 Existing Substation Modifications

The Timp and TriCity substations will each need to be modified and expanded to accommodate another line termination.

Figure 2 shows the additions/changes (shown within the "clouds") required at Timp Substation. The existing Hale/Geneva line would be relocated in the vicinity of the Substation to accommodate the new circuit to the Interconnection Customer's Energy Center. A new bay and breaker will be required. Existing breakers 131 and 132, and the associated switches will need to be replaced to handle the higher load current. The cost of these changes would be charged to the interconnection.

Figure 3 shows the additions/changes required at the Tri-City Substation. Three breakers are added to create a five-breaker ring bus. The existing 138 kV capacitor and 12.5 kV transformer are transferred to the same position in the ring bus. Both are currently connected to the line to Oquirrh. The capacitor is transferred to the ring bus, avoid tripping the capacitor in the advent of the outage of the line to Oquirrh with the heavier loadings in the area, caused by the Interconnection Customer's new generation. Seven existing switches must be replaced due to upgrades of the two lines

from Interconnection Customer's facility. Additionally, five new switches are required for the new ring bus. The line position between breakers 122 and 132 is currently occupied by the 138 line to American Fork. This line will be reconnected to the new line position created by the two new breakers in the upper bay of Figure 3. The new circuit (second circuit) to Interconnection Customer's facility will be connected to this existing line position. The existing circuit (first circuit), which will be reconductored and looped into Interconnection Customer's facility will retain is existing position in the Substation. The cost of two of the new breaker positions in the upper bay, corresponding to the reconnected American Fork line position, will be charged to the interconnection. The cost of the third new breaker position, to bring the capacitor bank into the ring bus, will be charged to the transmission network service request. The transformer relocation will be charged to Transmission Provider.

Figure 2

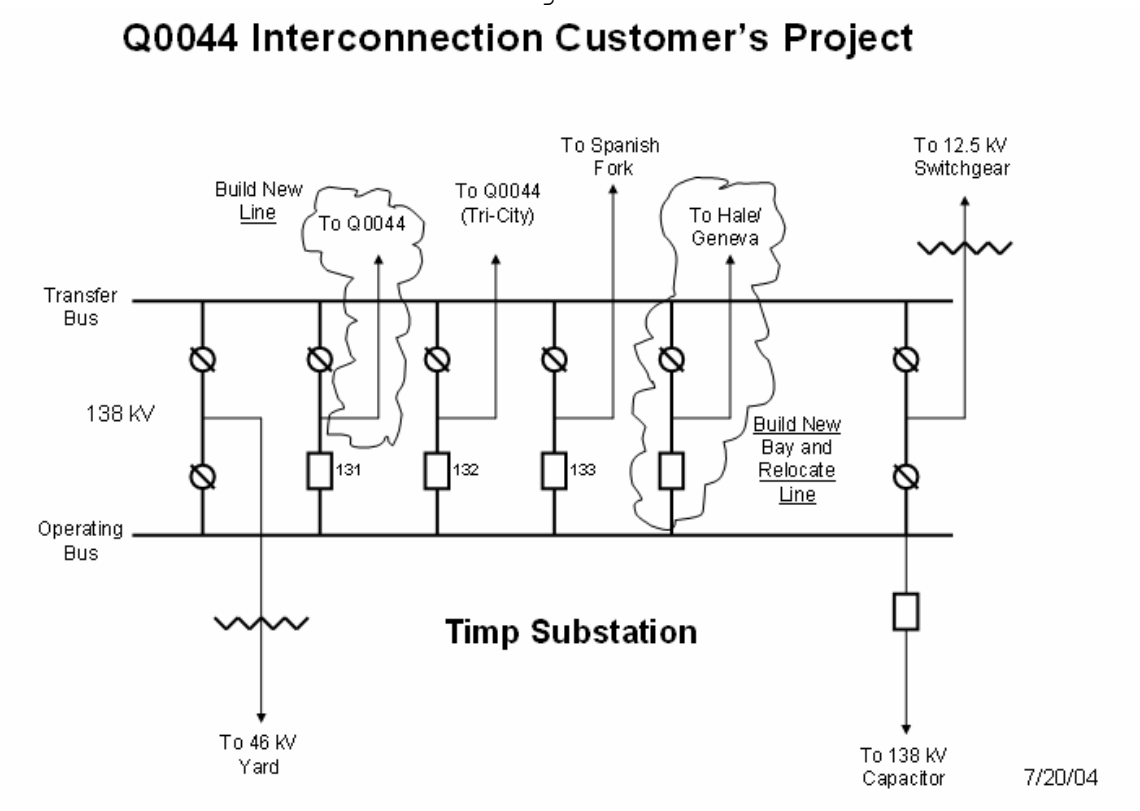

Figure 3

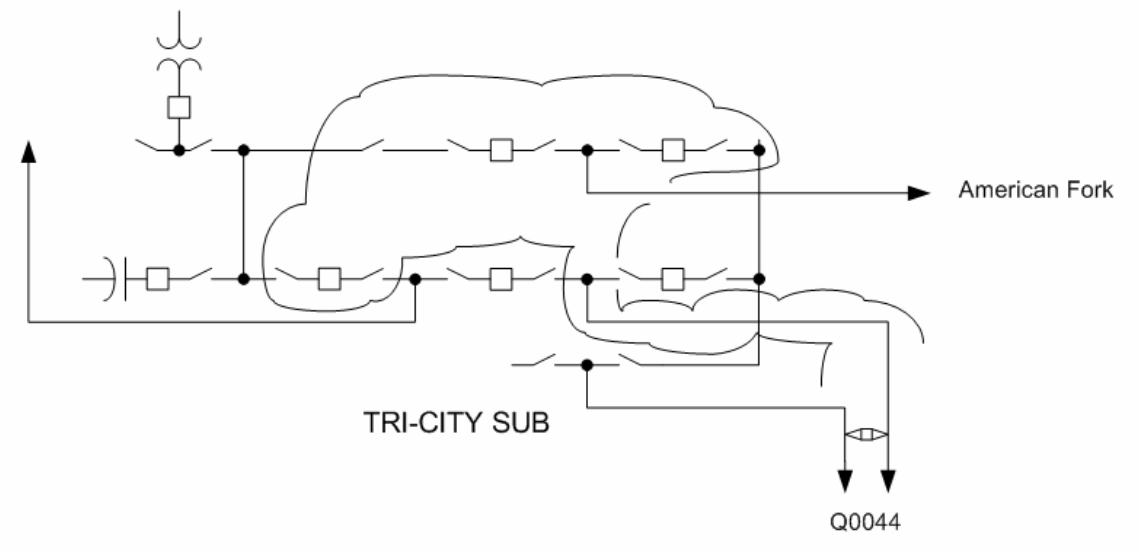

4.2.3 Existing Breaker Modifications due to Greater Fault Currents

A short circuit analysis was used to determine if the interrupting ratings of any existing breakers on Transmission Provider's System will be exceeded due to the addition of the Generating Facility. Each generator has a separate step-up transformer (111/148/185 MVA, 10% impedance for gas turbines, and 150/200/250 MVA, 10% impedance for the steam turbine). The gas turbine generator size is 195 MVA and the steam turbine generator size is 250 MVA.

Results of the study indicate:

The study showed that on the 138kV at Timp Substation breaker CB132 will need to be replaced due to the increased fault duty caused by the addition of the power plant but since it was previously noted that this breaker will need to be replaced to handle the additional load current this replacement is not an additional breaker.

The increase in the fault duty at Geneva Steel's substation and Provo City's Tamer substation could be over the fault interrupting rates of the circuit breakers in those substations. Since that equipment is not owned by Transmission Provider; we do not have the ratings for that equipment.

4.2.4 Protection Requirements

Besides the voltage and frequency protective relays that are required at the Generating Facility as described in the

Interconnection and Operating Requirements, the following new transmission line protection will be required: Current differential transmission line relay systems will be needed on the two Interconnection Customer Switchyard to Timp lines and the two Interconnection Customer Switchyard to Tri-City lines. These relay systems will be installed at the Switchyard, Timp and and Tri-City Substations. The current differential transmission line relay systems will communicate over fiber optic cables.

The switchyard ground mat and the ground mat under the power plant will be adequately tied together so that during ground faults the two yards will be at the same potential. By tying the ground mats together metallic control cables can be used to supply ac and dc signals for protection and controls between the two yards. The 138kV tie lines from the generator units will be protected with conventional bus relays.

4.2.5 Data Requirements (RTU)

A RTU will be installed in Interconnection Customer's Switchyard for the remote control and indication of the breakers in the switchyard. Status indication and analog data will be needed from the generation facility as well as an output signal for the control of the reactive power output. The switchyard RTU will be of a distributed design so that the data from the generation facility can be fed from a data concentrator in the plant through the Switchyard RTU to the system operators.

The data needed from the generation facility will include:

Breaker status indication for both the 138kV and 16.5kV breakers

Analog for the Net Real Power from each of the generation units
Analog for the Net Reactive Power from each of the generation units
Pulses for the Net Energy from each of the generating units.

Telemetering equipment will be installed at the Switchyard to communicate to Transmission Provider's EMS the level of power being produced by the generation facility.

At Interconnection Customer's Substation a D20 size 3 RTU is to be installed using the 8979 protocol.

At Tri-City Substation the existing L&G 5700 has spare points fro the additional breakers required.

At Timp Substation the existing Feranti Alert needs to be replaced with a size 2 D20 RTU talking to the 8979.

4.2.6 Communication Requirements

Note: The electronic communications requirements listed below are based on fiber optic cable being installed between the four substations (Interconnection Customer's, Timp, TriCity, and Camp Williams) and the relay protection requirement being dual Mirrored Bits on the four 138 kV line sections, the two (2) 138 kV lines from Timp to Interconnection Customer's and the two (2) 138 kV lines from Interconnection Customer's to TriCity

The electronic communications requirements for the protection of the four (4) lines mentioned and for the various SCADA, voice, and telemetry circuits are as follows by site:

4.2.6.1 Interconnection Customer's Switchyard

1 Lot Fiber optic cable OPGW will be included on the lines between TIMP and Camp Williams in the line estimate.

4 ea.	Fiber Distribution Units
1 ea.	Fiber Optic Node - OC12 53KM optics
2 ea.	Fiber Jumpers-Duplex single mode
2 ea.	DSX Jackfield
2 ea.	Channel Bank
1 ea.	48 Volt Battery Bank
1 ea.	48 Volt Battery Charger
16 ea.	Fiber Optic Modems
8 ea.	Fiber Jumpers-Duplex multi mode
1 lot	Innerduct
8 ea.	Digital Channel (Mirrored Bits)
1 ea.	4 Wire Channel (SCADA)
3 ea.	2 Wire FXS Channel (Voice and Dial Access)
2 ea.	Teltone Substation Line Sharing Switch (SLSS)
2 ea.	4 Wire Channel (Telemetry)
1 ea.	Telemetry Shelf
4 ea.	Telemetry Transmitters
1 ea.	Data Bridge (Telemetry)
1 lot	Miscellaneous

4.2.6.2 TriCity

4 ea. Fiber Distribution Units

1 ea.	Fiber Optic Node OC12 53kM optics
2 ea.	Fiber Optic single mode duplex jumpers
2 ea.	DSX Jackfield
1 ea.	Channel Bank
1 ea.	48 Volt Battery Bank
1 ea.	48 Volt Battery Charger
12 ea.	Fiber Optic Modems
6 ea.	Fiber Jumpers – Multi mode - Duplex
1 lot	Innerduct
6 ea.	Digital Channel (Mirrored Bits)
1 ea.	4 Wire Channel (SCADA)
3 ea.	2 Wire FXS (Voice and Dial Access)
2 ea.	Teltone Substation Line Sharing Switch (SLSS)
1 lot	Miscellaneous

4.2.6.3 Timp

2 ea.	Fiber Distribution Units
1 ea.	Fiber Optic Node OC12 53kM optics
2 ea.	Fiber Optic single mode duplex jumpers
1 ea.	DSX Jackfield
1 ea.	Channel Bank
8 ea.	Fiber Optic Modems
4 ea.	Fiber Jumpers – multi mode duplex
1 lot	Innerduct
4 ea.	Digital Channel (Mirrored Bits)
2 ea.	2 Wire FXS Channel (Voice and Dial Access)
2 ea.	Teltone Substation Line Sharing Switch (SLSS)
2 ea.	4 Wire Channel (Telemetry Back-to-Back) for Sigurd
1 lot	Miscellaneous

4.2.6.4 Point of the Mountain

1 ea.	Channel Bank – Remove for installation on Lake Mtn
1 Lot	Remove analog microwave, antenna, waveguide, multiplex etc, material.
1 Lot	Remove 3 each ACC channels from the analog multiplex and route through Timp Substation.
1 Lot	Rewire T1’s so there will not be back-to-back channels on Point of the Mountain.
1 lot	Miscellaneous

4.2.6.5 SCC

1 ea.	Channel Bank
2 ea.	FXO Channel (Voice & Dial Access) Timp
1 ea.	4 Wire Channel (SCADA) Interconnection Customer’s facility

3 ea.	FXO Channel (Voice & Dial Access) Interconnection Customer's facility
1 ea.	4 Wire Channel (Telemetry)
1 ea.	Telemetry Shelf
4 ea.	Telemetry Receivers
1 ea.	4 Wire Channel (SCADA) TriCity
3 ea.	FXO Channel (Voice & Dial Access) TriCity
1 lot	Miscellaneous

4.2.6.6 Lake Mountain

1 ea.	Install Coastcom removed from Point of the Mountain.
2 ea.	4 Wire Channel (Telemetry) to Sigurd
1 lot	Miscellaneous

4.2.6.7 Sigurd

1 Lot	Expand RTU to provide capacity for additional analog telemetry channels.
1 ea.	Coastcom channel bank.
1 ea.	4 Wire Channel (Telemetry)
1 ea.	Telemetry Shelf
4 ea.	Telemetry Receivers
1 lot	Miscellaneous

4.2.6.8 Oquirrh Substation

1 ea.	Coastcom channel bank.
1 ea.	Fiber OC12 53kM optics modules installed in existing DXM cabinet.
2 ea.	Fiber Distribution Units
1 lot	Miscellaneous

4.2.6.9 Camp Williams Substation

1 Lot	Remove analog microwave radio, antennas, waveguide multiplex, etc.
1 Lot	Relocate 3 ACC channels through Timp Substation.
1 Lot	Miscellaneous
4 ea.	Fiber optic modems.
4 ea.	Digital channels (mirrored bits)
2 ea.	Fiber jumpers – multi mode - Duplex

4.2.7 Installed Cost and Schedule Estimates for Transmission Provider's Interconnection Facilities and Network Upgrade Requirements

4.2.7.1 Cost (in current year dollars)

Network Upgrades	$15,137,895
Other than Network Upgrades	$ 975,000
Total Cost of ER Service	$16,112,895

Note, "Other than Network Upgrades" includes line protection panels, RTU, communication and revenue metering associated with the interconnections from the switchyard to the generating facility.

4.2.7.2 Schedule

The installation of the new switchyard, communications, protection scheme, and the additions, modifications, replacements at Transmission Provider's facilities; and the loop in of the 138kV Timp to Tri-City transmission line as described in the ER study results with no other transmission line modifications can be complete within 28 months from the date of execution of the Large Generation Interconnection Agreement or an Engineering and Procurement Agreement.

4.2.8 Maximum MW that can be delivered to Transmission Provider's Network Load with no Transmission Line Modifications or Additions. (For informational purposes only)

The maximum amount of generation that can be delivered to Transmission Provider's network load, with no transmission line modifications or additions (additional to those required for interconnection), is estimated to be approximately 100 MW.

4.2.9 Additional requirements, plus total cost and schedule to deliver 100% of the Project's capacity to Transmission Provider's network load. (For informational purposes only).

Additional transmission line modifications and additions (additional to those required for interconnection) are required to deliver 100% of the generating facility's capacity to Transmission Provider's network load.

Note, for some N-2 outages, generation dropping may be required. This matter will be reviewed further during the Impact Study.

4.2.9.1 Additional Transmission Line Modifications

In addition to the facilities required for interconnecting the plant to the 138 KV system, other facilities are needed to upgrade the 138 KV transmission in the area in order to deliver the plant output to the Transmission Provider's load (see Figure 4). First, the existing 138 KV line from TriCity to Oquirrh (approx. 23 miles) will need to be rebuilt with larger conductor to accommodate the higher flows to the north. Next the existing 138 KV line from Timp to Hale (approx. 5 miles) will also need to be rebuilt with larger conductor. Some sections (about 8 miles total) of the existing 46 KV line from American Fork to Highland will also need to be rebuilt for 138 KV, so the entire line can be operated at 138 kV. The 138 KV line from Ninety South-West Jordan-Taylorsville (approx. 7 miles) will require reconductoring.

Figure 4

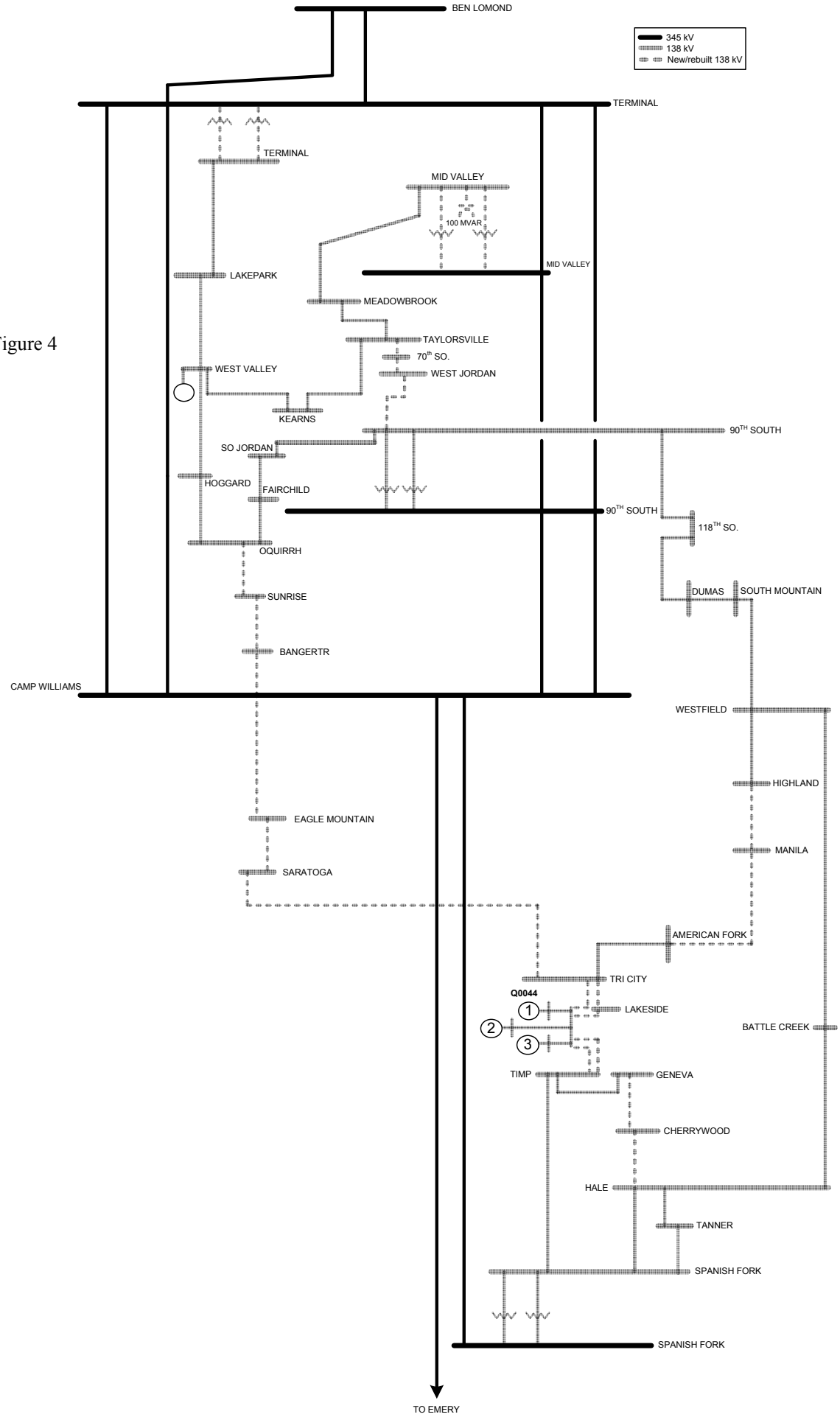
BEN LOMOND
345 kV
138 kV
New/rebuilt 138 kV
TERMINAL
TERMINAL
MID VALLEY
100 MVAR
MID VALLEY
LAKEPARK
MEADOWBROOK
TAYLORSVILLE
70th SO.
WEST JORDAN
WEST VALLEY
KEARNS
90TH SOUTH
SO JORDAN
HOGGARD
FAIRCHILD
90TH SOUTH
118TH SO.
OQUIRRH
DUMAS
SOUTH MOUNTAIN
SUNRISE
BANGERTR
CAMP WILLIAMS
WESTFIELD
HIGHLAND
EAGLE MOUNTAIN
MANILA
SARATOGA
AMERICAN FORK
TRI CITY
Q0044
1
LAKESIDE
2
BATTLE CREEK
3
TIMP
GENEVA
CHERRYWOOD
HALE
TANNER
SPANISH FORK
SPANISH FORK
TO EMERY

4.2.9.2 Additional Existing Breaker Modifications (short circuit)

With the addition of the network facilities the 138kV breakers 101 and 102 at 90th South Substation and the circuit switcher 134I at Cherrywood Substation will need to be replaced due to the increase in the magnitude of the short circuit current.

4.2.9.3 Additional Substation Modifications

Substation modifications will also be required replacing two 345/138 KV transformers at Terminal substation and two 345/138 KV transformers at Mid Valley with 700 MVA units. A 100 MVAR, 138 kV capacitor will also be required at Mid Valley substation for voltage support.

At Hale Substation breakers 117 and 118 and associated switches will need to be replaced due to the increased loading.

Replace five switches at West Jordan and five switches at Taylorsville, due to increased loading.

4.2.9.4 Additional Protection Requirements

No additional protection modifications are anticipated. This will be reviewed again in the Impact Study.

4.2.9.5 Additional Communication Requirements

Based on the additional transmission line requirements listed above, the only communication needs would be relaying changes associated with the rebuild of the American Fork to Highland line and operating it at 138 kV.

4.2.9.6 Additional Installed Cost and Schedule Estimates for Transmission Provider's Interconnection Network Upgrade Requirements to Deliver 100% of Power to Network Load.

4.2.9.6.1 Cost (in current year dollars)

Additional Network Upgrades to deliver 100% power to network load.	$45,589,832

4.2.9.6.2 Schedule

Thirty (30) months from date of execution of a facilities agreement. This schedule estimate includes facilities required for ER interconnection service.

4.3 Conclusions

- For ER service, the Interconnection Customer's generating station will be interconnected to the existing 138 KV transmission system at Timp and TriCity substations, via a new 138 kV switchyard. The switchyard will be connected as a breaker-and-a-half scheme. An existing single circuit 138 kV line from Timp to TriCity will be rebuilt as a double circuit line with larger conductors, and will be looped in and out of the new switchyard. A new breaker and change out of two existing breakers (131 and 132) and associated switches will be required at Timp. A new ring bus configuration, including two breakers charged to the interconnection, will be required at TriCity. Also at TriCity, seven existing switches must be replaced and five switches added. Transmission Provider will require that Interconnection Customer have their own 138 KV synchronizing breaker for each generator. Each step-up transformer will be connected directly to the switchyard with a separate interconnecting line. No additional breakers required change out due to increased short circuit levels. Current differential transmission line relay systems will be needed on the two double circuit line segments from the new switchyard to Timp and TriCity. They will communicate over fiber optic cables. An RTU will be installed at the new switchyard and an RTU of distributed design will be required at the generating facility. Communication modifications will be required at several existing locations, including TriCity Substation, Timp Substation, Camp Williams Substation, Salt Lake Control Center, Lake Mountain, and Sigurd. The estimated installed cost for the Transmission Provider's Interconnection Facilities and Network Upgrades are $16,112,895 in current year dollars. Transmission Provider can have the Transmission Provider's Interconnection Facilities and Network Upgrades ready for backfeed within 28 months of a signed Standard Large Interconnection Agreement. These facilities will be sufficient for generation interconnection to Transmission Provider's system, but will not allow delivery of power beyond the Point of Interconnection.

- The maximum MW that can be delivered to Transmission Provider's network load with no transmission line modifications or additions is approximately 100 MW.

- 100% of the Generating Facility's power can be delivered to Transmission Provider's network load provided that several additional modifications are made to Transmission Provider's system (to deliver the power to Transmission Provider's Salt Lake area load). These additions are discussed in Section 4.2.9. The additions and modifications include: rebuild of 138 kV lines from TriCity to Oquirrh and from Timp to Hale; upgrade of sections of 46 kV line from American Fork to Highland to 138 kV; replacing two 345/138 KV transformers at Mid Valley and two at Terminal with 700 MVA transformers; and addition of a 100 MVAR, 138 kV capacitor at Mid Valley. Breakers 117 and 118 and associated switches at Hale Substation must be replaced due to increased loading. Five switches at West Jordan and five switches at Taylorsville must be replaced due to increased loading. Additionally, these changes cause the following breakers to be replaced due to increased short circuit currents: 138 kV breakers 101 and 102 at 90th South Substation and circuit switcher 134I at Cherrywood Substation. The estimated additional cost for Network Upgrades (costs additional to the ER estimate to deliver 100% power to network load) are $45,589,832 in current year dollars. Transmission Provider estimates that it can have these additional facilities in service within 30 months of a signed facilities agreement. These additional modifications are not required for ER interconnection service – they are provided for informational purposes only.

- The modifications to deliver 100% of the power to Transmission Provider's network load above will be reviewed again in the Impact Study. For some N-2 outages, generation dropping may be required.

- Note, cost and schedule estimates above are offered to give the Interconnection Customer a sense for screening purposes. The estimates are not based on a detailed analysis.

4.5 Comments from City of Provo – an Affected System

Provo has two circuit breakers (110 and 111) at Hale Substation, and two circuit switchers ¾ mile from Hale that are rated at 20 kA. Addition of the generation, via a 138

kV interconnection, results in a three phase fault on the Hale bus of 20,085 Amps. Provo is concerned about this equipment.

The City is also concerned about parallel flows on its new 138 kV line completed two years ago. [Note, although the Feasibility Study database did not include this line, Transmission Provider will include the line in the Impact Study database.]