PACIFICORP
A MIDAMERICAN ENERGY HOLDINGS COMPANY

Small Generator Interconnection
System Impact Study Report

Completed for
Interconnection Customer
A Qualifying Facility (QF)

Proposed Interconnection
20.8 kV Sunset Feeder 4M182 out of Hillview Substation in Benton County, Oregon

July 21, 2008

TABLE OF CONTENTS

1.0 DESCRIPTION OF THE GENERATING FACILITY

("Interconnection Customer") is looking to interconnect a 6.475 MW natural gas generation facility in Benton County, Oregon. The Interconnection Customer is planning to interconnect two generation units comprised of one 5.275 MW and one 1.2 MW synchronous, natural gas generators. Interconnection Customer is planning to operate this generator as a Qualified Facility as defined by the Public Utility Regulatory Policies Act of 1978 (PURPA).

2.0 SCOPE OF THE STUDY

The System Impact Study Report shall consist of a short circuit analysis, a stability analysis, a power flow analysis, voltage drop and flicker studies, protection and set point coordination studies, and grounding reviews, as necessary. The System Impact Study shall state the assumptions upon which it is based, state the results of the analyses, and provide the requirement or potential impediments to providing the requested interconnection service, including a preliminary indication of the cost and length of time that would be necessary to correct any problems identified in those analyses and implement the interconnection. The System Impact Study shall provide a list of facilities that are required as a result of the Interconnection Request and non-binding good faith estimates of cost responsibility and time to construct.

3.0 DESCRIPTION OF PROPOSED INTERCONNECTION

The designated point of interconnection to the Distribution Provider's system is located at a new switch to be located along 35th street on the Distribution Providers 20.8 kV Sunset Feeder 4M182 out of Hillview Substation. The two generators will be connected to a single 15,000 kVA, 20.8 /13.8 kV step-up transformer, with a winding configuration of grounded wye on the high side and delta on the low side.

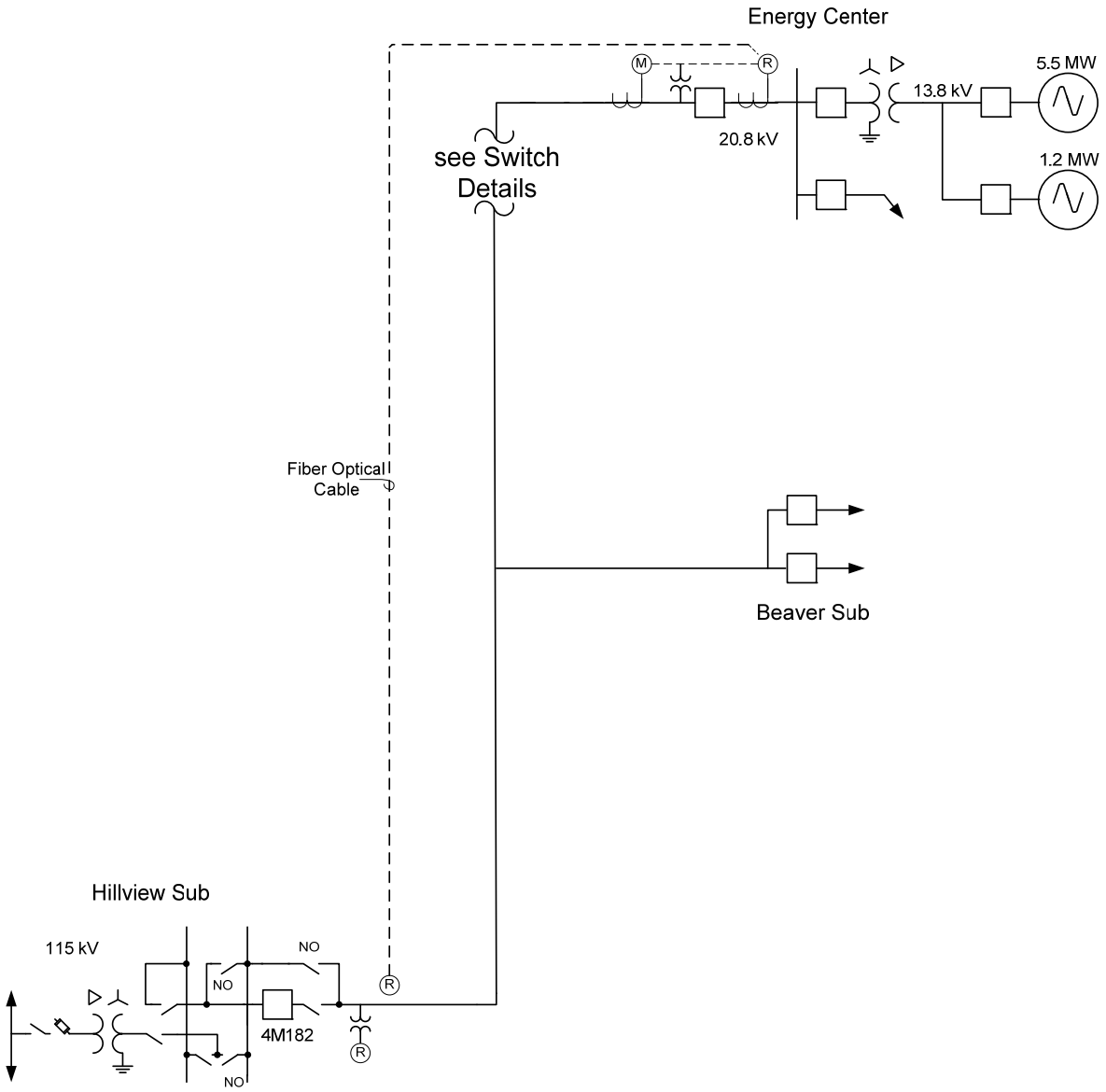

Figure 1: System One Line Diagram

Switch Details

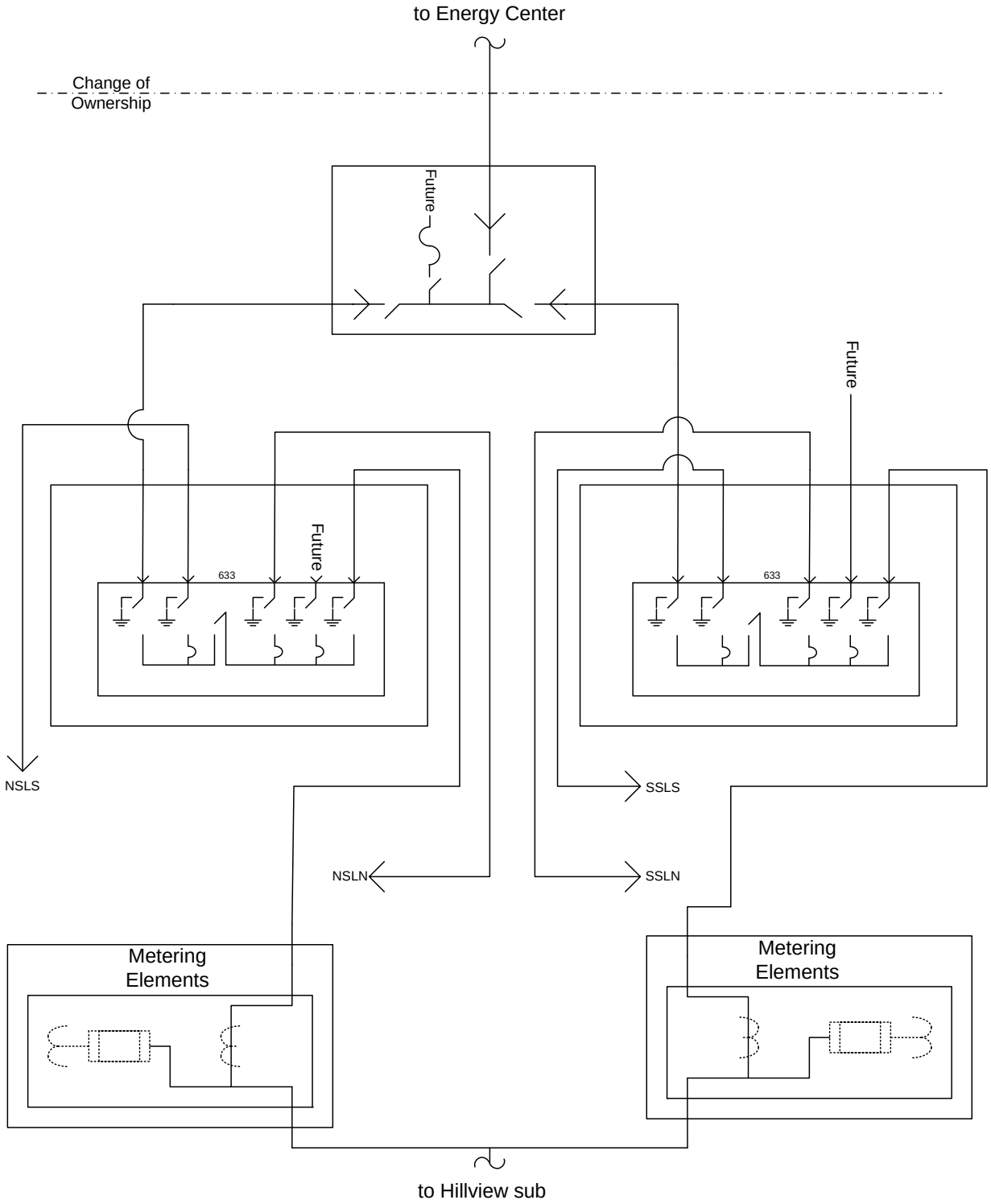

Figure 2: New Point of Delivery Switch Diagram

4.0 ASSUMPTIONS & RESULTS

4.1 STUDY ASSUMPTIONS

The generator is expected to operate 24 hours a day and seven days a week. The primary meter (point of interconnection) power factor range studied was .91%-.80% lagging prior to the proposed generation facility being installed. Without compensation, from the generator or otherwise, power factor will decrease as load is offset with local generation.

Eight scenarios exist of which four case studies were assembled and studied:
1. Peak Load and Peak Generation on the Sunset, 4M182, circuit out of Hillview Substation
2. Minimum Load and Peak Generation on the Sunset, 4M182, circuit out of Hillview Substation
3. Peak Load and no Generation on the Sunset, 4M182, circuit out of Hillview Substation
4. Minimum Load and no Generation on the Sunset, 4M182, circuit out of Hillview Substation
5. Peak Load and Large Generator on the Sunset, 4M182, circuit out of Hillview Substation (Assumed equivalent to #1)
6. Minimum Load and Large Generator on the Sunset, 4M182, circuit out of Hillview Substation (Assumed equivalent to #2)
7. Peak Load and Small Generator on the Sunset, 4M182, circuit out of Hillview Substation (Assumed equivalent to #3)
8. Minimum Load and Small Generator on the Sunset, 4M182, circuit out of Hillview Substation (Assumed equivalent to #4)

4.2 RESULTS

It has been determined that the addition of Interconnection Customer's proposed generation facility to Distribution Provider's distribution system will not adversely impact the operation of the Sunset, 4M182, circuit out of Hillview Substation. Load levels are such that there is minimal risk that peak generation will exceed load on the station transformer; however, historic data shows that peak generation does approach and could exceed circuit minimum loading. The risk of islanding does exist, though it could be managed with proper protection, control and transfer trip schemes. Any increase in circuit VAR loading will need correction by the customer.

There are no auto-sectionalizing devices between Hillview Substation and Interconnection Customer's proposed generation facility.

There are two other circuits within close proximity of the Interconnection Customer's proposed generation facility; Hillview, West Hills, circuit 4M180 and Grant Street, Chimtimini, circuit 4M266. These circuits were not considered for alternate interconnection of the proposed generation facility. It is expected that the interconnection would be off-line and open if either of these circuits were configured to supply all or part of the Interconnection Customer's campus for any duration of time.

Should the Interconnection Customer desire to interconnect to either of these circuits, further study would be needed to determine the required modifications, if any, to these existing circuits.

5.0 REQUIREMENTS

5.1 DISTRIBUTION MODIFICATIONS

All distribution improvements off campus will be addressed in the relocation of the delivery point to campus, including reconductor of 35th Street from 2/0 CU to 795 AAC. Improvements on campus will be addressed in the facilities improvements on campus under the "Facilities Use Agreement" between Interconnection Customer and Pacific Power. Such facilities will include gang-operated, visible open, lockable disconnect(s) within the exclusive control of Pacific Power. The interconnection of the proposed generation facility cannot take place until these improvements have been made.

The stated purpose of the generation facilities is to provide stand alone operation in the event of loss of supply from Pacific Power. Any restoration of utility supply by parallel switching between the Interconnection Customer's proposed generation facility and the utility must be scoped and managed based the specifics of that design. These modifications only address traditional inter-connection; i.e., Drop generation at fault or drop generation to close inter-tie.

5.2 EXISTING BREAKER MODIFICATIONS – SHORT-CIRCUIT

The increase in the fault duty on the system as a result of the addition of the generation facility with the 1625kVA and 6000kVA generators connected to the distribution system through a 15 MVA transformer with 6.5% impedance will not require the replacement of any of the existing fault interrupting devices.

5.3 PROTECTION REQUIREMENTS

The Figure 1: System One Line Diagram illustrates how the proposed generation facility will be connected to the 20.8kV distribution feeder out of Hillview Substation. The generators will need to disconnect from the system any time there is a problem on the 115kV system that feeds Hazelwood Substation, which is the normal source for the feeder that the proposed generation facility will be connected to. This disconnection will be accomplished by the underfrequency and undervoltage relay that will be installed near the point of interconnection between the Interconnection Customer and the Distribution Provider. These relay functions will accomplish detection of the 115kV line problem due to the large unbalance that will exist between the available generation and the connected load.

The generators will also need to disconnect in a high speed manner from the system when the breaker 4M182 at Hillview Substation opens for faults on the 20.8kV feeder. The potential generation/load balance that this configuration could result in will not insure that the underfrequency or undervoltage can be used to detect this condition. Most faults on the overhead lines are not permanent and fast interruption of the fault and the re-

energizing of the system will restore service to the connected load. To accomplish the high speed disconnection of the generators a transfer trip system between Hillview Substation and the Generation facility will need to be installed. With the transfer trip system the relays at Hillview Substation will trigger the opening of 4M182 and a signal will be sent to the Generation facility to trigger the disconnection of the generators. It is assumed at this time the communication system will be a fiber optic cable under built on the distribution line between Hillview Substation and the generation facility. Modern relays are able to communicate directly over a digital communication system, like the fiber optic cable, so no additional communicate equipment will be needed other that the relays. The protective relay to be installed at the Generation facility for the interconnection will perform three functions:

1. Communicate over the fiber optic cable to the relay in Hillview Substation to receive the transfer trip signal from Hillview Substation. The relay will trip either the 20.8kV step-up transformer breaker or the 13.8kV generator breakers for the receipt of the transfer trip signal.
2. Monitor the voltage magnitude and frequency at the Generation facility location. If the magnitude or frequency of the voltage is outside of normal range of operation the 13.8kV breakers at the generation facility will be tripped.
3. Monitor the current and the voltage to detect faults on the 20.8kV distribution line between Hillview Substation and the generation facility. This fault detection will be a backup to the transfer trip for the opening of breaker 4M182 at Hillview Substation. The relaying will be time delayed to coordinate with the existing protective equipment on the distribution line.

At Hillview Substation hot line blocking of the automatic reclosing must be added. The hot line blocking is to prevent the inadvertent automatic reclosing of the breaker when the generators are operating and due to some failure of the protection system the trip signal does not get to the generation facility. The hot line blocking function is used to delay automatic reclosing until the line is no longer energized.

All of the protective relaying that has been noted in this report is for the protection and safe, reliable operation of the transmission facility. Additional relaying will be needed for detecting problems in the generation facility. The relaying for the plant is the responsibility of the Interconnection Customer.

5.4 DATA REQUIREMENTS (RTU)

Data for the operation of the power system will be needed from the Interconnection Customer's Generation facility. This data can be acquired by installing a RTU at the Generation facility. The following is a listed of the data that will be acquired:

<u>Analogs:</u>

- Net Interchange Real Power
- Net Interchange Reactive Power
- Real power flow from Generator 1

- Reactive power flow from Generator 1
- Real power flow from Generator 2
- Reactive power flow from Generator 2
- 20.8kV A phase voltage
- 20.8kV B phase voltage
- 20.8kV C phase voltage

Accumulator Pulses:
- Interchange metering kWH

Status:
- Generator 1 13.8kV breaker
- Generator 2 13.8kV breaker
- 20.8kV Step-up Transformer breaker
- 20.8kV System Tie breaker
- Line Relay Alarm

The net real power MW will also be feed into PacifiCorp Alternate Energy Control Center in Medford independent of the analog signal supplied to the RTU.

5.5 COMMUNICATION REQUIREMENTS

For Line Protection

A 48 fiber ADSS fiber-optic cable will be installed from Hillview substation to the Interconnection Customer's proposed generation facility. It will terminate in patch panels at either end.

For Data Delivery to the Control Centers

A GE D20 RTU will be installed at Hillview Substation. It will communicate over a fiber pair to an SEL-2030 or other data concentrator through a DNP port. Another DNP port and fiber pair will be used to receive MW and kWh values from the meter at Interconnection Customer's proposed generation facility. The RTU at Hillview will communicate to Portland Control Center over an existing MAS link.

Interconnection Customer will be responsible for providing a dial-up circuit for the remote interrogation of the meters and relays at the generation facility. Interconnection Customer will also need to provide a 4-wire analog point-to-point telco lease from Generation facility to PacifiCorp's Willamette Technical Operations Office. Distribution Provider will install RFL 9800 tone telemetry gear at the Generation facility and connect it to the lease. The RFL gear will transmit the interconnect MW value on this lease and through PacifiCorp's private communication system to tone receivers at Portland Control Center and Medford Service Center. The alternate route system is used for Area Control performance and for the Alternate Control Center requirement.

5.6 SUBSTATION REQUIREMENTS

The addition of the proposed generation facility will require the Distribution Provider to install three new 20.8kV voltage transformers (VT) on the Sunset Feeder (4M182). Installation of the VTs will require the addition of a structure, a, NEMA Type 4 junction box, welding a 4 hole pad onto each phase of the 1" aluminum bus and installing a 4/C direct burial cable from the structure/junction box to the control house.

5.7 METERING REQUIREMENTS

Two separate metering points will be installed at the point of interconnection. Both metering locations will include a primary and back-up meter. The metering will be bi-directional to measure generation quantities received and retail load delivered. The two metering sites will be totalized using energy pulses to determine a net interchange between the Interconnection Customer and Distribution Provider. The primary meter will be used for SCADA and will include: bi-directional KWH and KVARH quantities, MW, MVAR, Power Factor, and per phase volts and amps. The back-up meter will be used for telemetry MW data. The metering instrument transformers will be installed in a 600 amp padmount metering enclosure. The meters will be installed in a NEMA 3R rated enclosure. The current transformers shall be 0.15% metering accuracy class and dedicated solely for metering. The voltage transformers shall be 0.3% metering accuracy class. A dial-up phone line will be required so the Distribution Providers MV-90 data acquisition system can download metering data. Digital or Analog outputs from the meter may be provided to the Interconnection Customer, but must be requested before final designs are complete.

6.0 COST ESTIMATE

The following estimate represents only scopes of work that will be performed by the Distribution Provider. Costs for any work being performed by the Interconnection Customer are not included.

Generation Facility	$ 171,300
Distribution Line	$ 265,000
Hillview Substation	$ 144,800
Fiber Optic	$ 84,000
Portland Control Center	$ 10,000
Willamette PDO	$ 7,600
Medford Service Center	$ 7,600
Total Project	**$ 690,300**

Note: Costs for all excavation, duct installation and easements shall be borne by the Interconnection Customer and are not included in this estimate. This estimate is as accurate as possibly given the level of detailed study that has been completed to date and approximates the costs incurred by PacifiCorp to interconnecting this generator to PacifiCorp's electrical distribution system. A more detailed estimate is calculated during the Facilities Study. The Interconnection Customer will be responsible for all actual costs, regardless of the estimated costs communicated to or approved by the Interconnection Customer.

7.0 SCHEDULE

At this time, it is estimated that the upgrades required to place this project in service could be completed within nine to twelve months of a signed interconnection agreement. Further details regarding the schedule will be available through the Facilities Study when a more detailed estimate has been prepared and lead times for the required equipment have been calculated.

8.0 PARTICIPATION BY AFFECTED SYSTEMS

No Affected Systems were identified in relation to this Interconnection Request.