PACIFICORP
A MIDAMERICAN ENERGY HOLDINGS COMPANY

Large Generator Interconnection
**Feasibility Study Report**

Completed for
**Q0100**

Proposed Interconnection
**on PacifiCorp's Existing**
**Yellowtail-Frannie**
**230 kV Transmission Line**

**March 26, 2007**

# TABLE OF CONTENTS

1.0 DESCRIPTION OF THE GENERATING FACILITY ..... 1
2.0 SCOPE OF THE STUDY ..... 1
3.0 TYPE OF INTERCONNECTION SERVICE ..... 1
4.0 STUDY ASSUMPTIONS ..... 2
5.0 PHASE 1 – 99 MW ..... 3
5.1 Energy Resource (ER) Interconnection Service ..... 3
5.1.1 Study Results 3
5.1.2 Cost Estimate 8
5.1.3 Schedule 8
5.1.4 Maximum Amount of Power that can be delivered into Network Load, with No Transmission Modifications (for informational purposes only) 8
5.1.5 Additional Transmission Modifications Required to Deliver 100% of the Power into Network Load (for informational purposes only) 8
5.2 Network Resource (NR) Interconnection Service ..... 10
5.2.1 Study Results 10
6.0 PHASE 2 – 99 MW – (ADDITIONAL TO PHASE 1) ..... 10
6.1 Energy Resource (ER) Interconnection Service ..... 10
6.1.1 Study Results 10
6.1.2 Cost Estimate (Incremental to Phase 1) 13
6.1.3 Schedule (Incremental to Phase 1) 13
6.1.4 Maximum Amount of Power that can be delivered into Network Load, with No Transmission Modifications (for informational purposes only) 13
6.1.5 Additional Transmission Modifications Required to Deliver 100% of the Power into Network Load (for informational purposes only) 14
6.2 Network Resource (NR) Interconnection Service ..... 15
6.2.1 Study Results 15
7.0 PHASE 3 – 57 MW - (ADDITIONAL TO PHASES 1 AND 2) ..... 16
7.1 Energy Resource (ER) Interconnection Service ..... 16
7.1.1 Study Results 16
7.1.2 Cost Estimate 17

7.1.3 Schedule 17
7.1.4 Maximum Amount of Power that can be delivered into Network Load, with No Transmission Modifications (for informational purposes only) 17
7.1.5 Additional Transmission Modifications Required to Deliver 100% of the Power into Network Load (for informational purposes only) 18
7.2 Network Resource (NR) Interconnection Service ..... 19
7.2.1 Study Results 19
8.0 PARTICIPATION BY AFFECTED SYSTEMS ..... 19

## 1.0 DESCRIPTION OF THE GENERATING FACILITY

Interconnection Customer has proposed interconnecting 255 MW of new generation, in three phases—99 MW (Phase 1) plus an additional 99 MW (Phase 2) and finally an added 57 MW (Phase 3)—to PacifiCorp's ("Transmission Provider") Yellowtail-Frannie 230-kV transmission line in Big Horn County, Montana ("Project"). The requested commercial operation date for Phase 1 is December 31, 2008, for Phase 2 is December 31, 2009, and for Phase 3 is December 31, 2010. The project will consist of 85 Vestas V90 – 3 MW wind turbine-generators.

## 2.0 SCOPE OF THE STUDY

This Interconnection Feasibility Study ("Study") report ("Report") provides the following information:

- Preliminary identification of all required interconnection facilities. For Energy Resource Interconnection Service, this Study will also identify any Network Upgrades that will be required in order to allow the proposed facility to generate at full output. For Network Resource Interconnection Service, the Study will identify any Network Upgrades that will be required to integrate the proposed facility in a manner comparable to the manner in which PacifiCorp integrates its own generating resources to Network Loads;

- Preliminary identification of any circuit breaker short circuit capability limits exceeded as a result of the interconnection; and;

- Preliminary description and non-binding estimated cost of facilities required to interconnect the Large Generating Facility to the Transmission System and to address the identified short circuit and power flow issues.

## 3.0 TYPE OF INTERCONNECTION SERVICE

The Interconnection Customer has selected *Network Resource (NR)* Interconnection Service, but has also elected to have the interconnection studied as an *Energy Resource (ER).* The customer will select NR or ER prior to the Facilities Study.

## 4.0 STUDY ASSUMPTIONS

- A number of higher priority Transmission Service and/or Generator Interconnection requests will be considered in this study including but not limited to the following. If any of these requests are withdrawn, PacifiCorp reserves the right to require that this request be restudied, and the results and conclusions may significantly change.

  - Q0059, a 250 MW LGI requesting NR Interconnection service
  - AREF 301210, a 80 MW Network Load
  - AREF 306174, a 575 MW request for Network Resource designation
  - AREF 345778, a 175 MW request for Network Resource designation
  - AREF 345779, a 750 MW request for Network Resource designation
  - AREF 367339, a 275 MW PTP request
  - AREF 368231, a 500 MW request for Network Resource designation

- In order to accommodate requests for Network Service capacity from Wyoming to the Wasatch Front, as noted above, at least two new high voltage transmission lines will be required from the Miners and Bridger areas to the Wasatch Front, Transmission Provider's main load area in the 2012 to 2014 time period. In addition, a new 230 kV line from Chappel Hill to Jonah will also be in-service by 2008.
- To the extent practical, this study will be based on the results of prior studies and engineering judgment. Dynamic analysis will be performed during the System Impact Study.

- The Yellowtail-Frannie 230 kV line is one of four lines that make up the 'Yellowtail South' constrained path[1]. The Total Transmission Capacity (TTC) of this path is 625 MW. Transmission Provider presently has 293 MW of southbound obligations on this path. The

[1] The four lines that make up the Yellowtail South path are the Yellowtail-Frannie and –Goose Creek 230 kV lines and the two Yellowtail-Lovell 115 kV lines.

southbound Available Transmission Capacity (ATC) of this path is then 625 – 293 MW, or 332 MW.

- With the addition of this project, the definition of the Yellowtail South path must be changed such that the schedule or flow on the New Switchyard-Frannie rather than the Yellowtail-Frannie 230 kV line will be included. As such, the Yellowtail South ATC will decrease from 332 to 77 MW.

- The impact of generation at Q0100 on TOT 4B (the constrained transmission path north from Dave Johnston/Casper/Spence/Riverton) will be studied during the System Impact Study. For instance, if the generation at the Project generating facility and the south to north flows across TOT 4B are simultaneously high, the New Switchyard-Yellowtail 230 kV line section may be exposed to overloads following certain TOT 4B N-1 transmission line outages, and may require a generation runback or tripping scheme for generation at the Project generating facility. Generation tripping may be required for other unusual system outage conditions.

- All facilities will meet or exceed the minimum WECC, NERC, and PacifiCorp performance and design standards.

## 5.0 PHASE 1 – 99 MW

## 5.1 Energy Resource (ER) Interconnection Service

### 5.1.1 Study Results

5.1.1.1 Requirements

#### *5.1.1.1.1 Generating Facility Modifications*

The facility will meet all the requirements set forth in the Interconnection Agreement including the ability to operate under voltage control with sufficient reactive capacity to deliver power at the Point of Interconnection anywhere in the range of +/- 0.95 power factor. The individual wind turbine-generators will also meet the FERC low voltage ride-through criteria.

#### *5.1.1.1.2 Transmission Modifications*

The Interconnection Customer desires to interconnect a wind generation facility to PacifiCorp's Yellowtail-Frannie 230 kV line approximately 6.2 miles west southwest of Yellowtail dam in Bighorn County, Montana. The switchyard and project substation will be located adjacent to the transmission line. The 230 kV switchyard will consist of a four breaker ring-bus with two line terminals and two transformer terminals per the Interconnection Customer's conceptual one-line diagram.

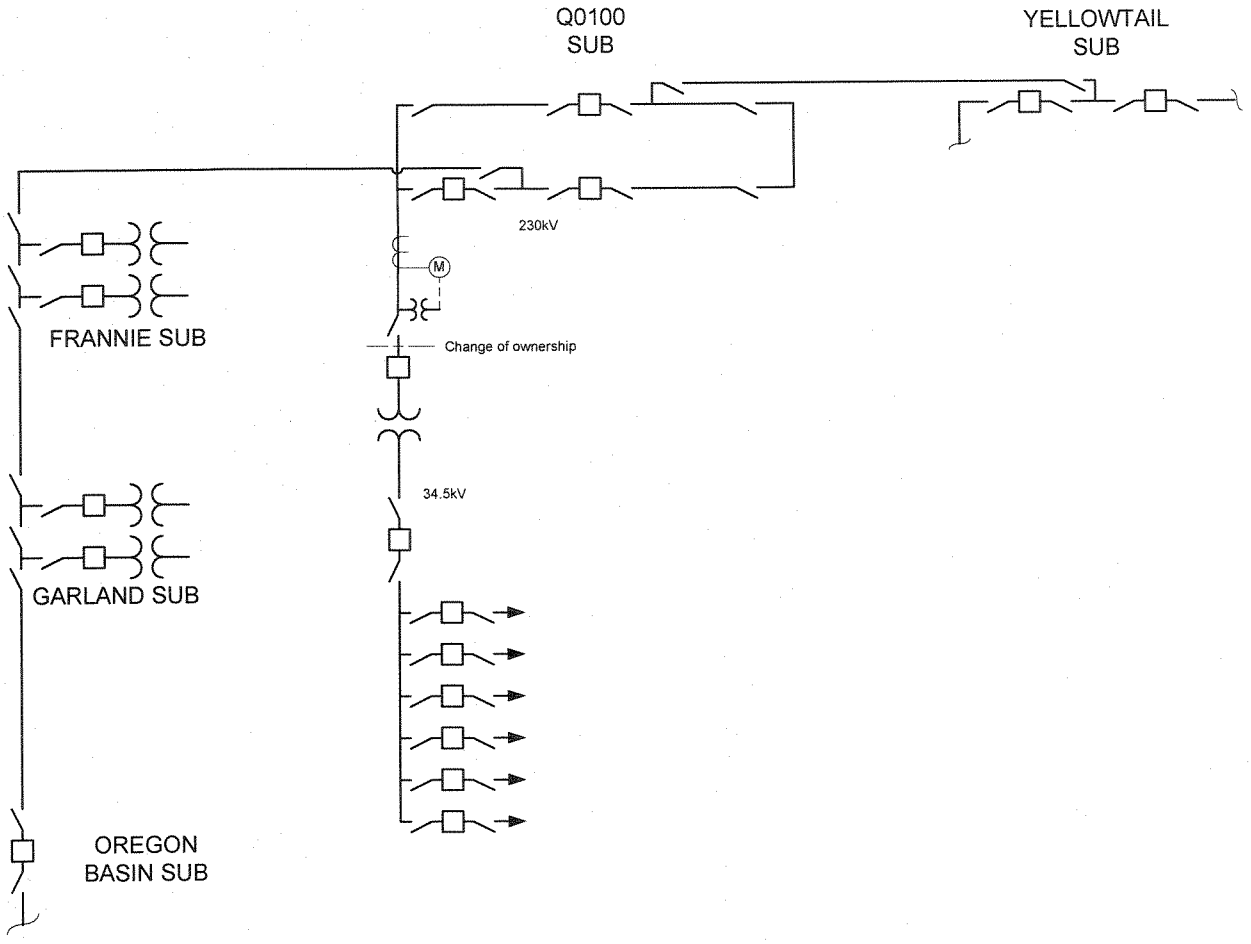


Figure 1 System One Line Diagram

#### *5.1.1.1.3 Existing Circuit Breaker Upgrades – Short Circuit*

The increase in the fault duty on the system as a result of the addition of the generation facility with the 33 – 3 MVA generators fed through 1 – 75/100/125/140MVA step up transformer with 9.5% impedance will not push the fault duty above the interrupting rate of any of the existing fault interrupting equipment.

#### *5.1.1.1.4 Protection Requirements*

The installation of protective relays for line fault detection will be required at the Transmission Providers new 230kV switching station for the protection of the line to the Interconnection Customer's substation, and the lines to Yellowtail Substation and Oregon Basin Substations. Pilot line protection will be used on both the Yellowtail and Oregon Basin lines. In the case of the Yellowtail line a new fiber optic cable will be strung between the two substations. The existing shield wire will be replaced with a shield contained the fiber optic cable. This cable will be used for the line protection system and to communicate status and loading information back to the Transmission Providers' Energy Control Center. For the Oregon Basin line the pilot line protection will use power line carrier (plc). A plc system is currently used on the Oregon Basin – Yellowtail line. With this plan a minimal amount of work will need to be done at Oregon Basin because the existing relays and plc equipment will continue to be used. The relays at both Yellowtail and Oregon Basin were recently replaced so those systems will be compatible with the new relays at the Q0100 switching station. This system is shown in figure 1 System One Line Diagram.

The protection for the tie line between the switching station and the Interconnection Customer's substation can be a bus differential relay if the ground mats of the two stations are connected. In addition to the line protective relaying a relay used for under/over voltage and over/under frequency protection of the system will be installed at switching station. If the voltage, magnitude or frequency, is outside of the normal operation range this relay will trip open all of the Interconnection Customer's 34.5 kV line breakers at the collector station.

#### *5.1.1.1.5 Data (RTU) Requirements*

The installation of a RTU is required at the Transmission Provider's new switching station. With the wind farm collector station adjacent to the switching station; the same RTU will receive data from the Interconnection Customers data concentrator via a digital communication circuit. In addition to the control and indication of the 230kV breakers in the switching station the following data from the wind farm, collector station, and switch yard will be feed into the RTU.

The data will be transmitted to the PacifiCorp system over communications circuits.

From the Switching Station:

Analogs:

- Net Generation MW
- Net Generator MVAR

Accumulator Pulses:

- Interchange metering kWH

From the Collector Station:

Analogs:

- Real power flow through each of the 34.5kV line feeder breakers
- Reactive power flow through each of the 34.5kV line feeder breakers
- Reactive power flow from each of the shunt capacitor banks
- A phase 230kV transmission voltage
- B phase 230kV transmission voltage
- C phase 230kV transmission voltage
- Wind speed

Status:

- All 34.5 and 230kV breakers and circuit switchers
- Line relay trouble alarm

The interchange real power MW will need to be telemetered to the Transmission Provider's Alternate Energy Control Center at Casper Substation independent of the analog supplied to the RTU

#### 5.1.1.2 Other Modifications

Other modifications will be discussed in the system impact study report.

### 5.1.2 Cost Estimate

| | |
|---|---|
| Interconnection – Direct Assigned Facilities | $ 0 |
| Interconnection – Network Upgrades | $4,000,000 |
| **Total Cost – ER Interconnection Service – Interconnection Only** | **$4,000,000** |

### 5.1.3 Schedule

The critical path item in the construction schedule will be engineering, procurement and construction of the new switching station. Transmission Provider can complete this in 18 months following the signing of a Large Generator Interconnection Agreement.

### 5.1.4 Maximum Amount of Power that can be delivered into Network Load, with No Transmission Modifications (for informational purposes only)

PacifiCorp Transmission does not have a corresponding network transmission service request for this resource, and does not make resource dispatch decisions, therefore it cannot provide an accurate answer to this question. Without the addition of new transmission lines, service will be limited to Network Loads east of the Rock Springs/Firehole constrained path, but only to the extent that re-dispatch of local resources occurs.

### 5.1.5 Additional Transmission Modifications Required to Deliver 100% of the Power into Network Load (for informational purposes only)

5.1.5.1 Requirements

#### *5.1.5.1.1 Transmission Modifications*

In order to provide Network Resource Interconnection Service from the proposed generating plant to Network Loads in Wyoming east and west of the Rock Springs/Firehole constrained path, it will be necessary to construct a new 230 kV line from the planned Jonah switchyard east of Pinedale, Wyoming, to a new switchyard on the Atlantic City-Rock Springs 230 kV line. This

new line will require a 230 kV phase shifting transformer which, for the purposes of this study, will be assumed to have a capacity of 400 MVA with a range of +/- 45 degrees. This proposed facility is being provided by the Transmission Provider as part of its plan to serve local load and is also required by a higher priority LGI queue project.

If delivery to Network Loads in Utah is required, then the project could participate in the construction of two new 500 kV lines from Bridger to the International switchyard in the Salt Lake City area (for higher priority queue requests). This conceptual project will be designed to deliver 2255 MW of power (2000 MW for third parties and 255 MW for the Interconnection Customer). However, these new lines cannot be in-service by the 12/31/2008/2009/2010 Phase A/B/C dates requested by the Interconnection Customer. As such, delivery to loads in Utah could not begin until these lines are in-service.

#### 5.1.5.2 Cost Estimate

The cost of facilities to deliver power to network loads in Utah will be assumed to be allocated to Interconnection Customers on a pro rata basis based on delivered capacity. For the purpose of an estimate for this report, for this phase, the Interconnection Customer will be responsible for a 99 MW share of the total 2255 MW.

The following cost information is based on block estimates or other generalized data. Actual costs may significantly differ due to factors including, but not limited to, price changes for raw and manufactured products (switches, transformers, aluminum, steel, concrete, etc.), differences in route as well as land or rights-of-way costs, changes in design or configuration, line design, voltage, and number of circuits. This is an order-of-magnitude estimate and is intended for informational purposes only.

| Description | Estimated Cost $2007 |
|---|---|
| 99MW/2255MW (4.3%) | $66,000,000 |
| | |
| **Total – 100% Deliverability** | **$66,000,000** |

## 5.2 Network Resource (NR) Interconnection Service

### 5.2.1 Study Results

5.2.1.1 Requirements

The requirements are the same as the total requirements under Section 5.1 (for ER Interconnection Service). All are required for NR interconnection service.

5.2.1.2 Cost Estimate

The resulting estimated cost is the sum of the cost under Sections (for ER Interconnection Service).

| | |
|---|---|
| ER Interconnection Service – Interconnection Only | $ 4,000,000 |
| ER Interconnection Service – 100% Deliverability | $ 66,000,000 |
| **Total Cost – NR Interconnection Service** | **$70,000,000** |

5.2.1.3 Schedule

The critical path item in the construction schedule will be engineering, procurement and construction of the new transmission line, which can take up to five years.

## 6.0 PHASE 2 – 99 MW – (ADDITIONAL TO PHASE 1)

## 6.1 Energy Resource (ER) Interconnection Service

### 6.1.1 Study Results

6.1.1.1 Requirements

#### *6.1.1.1.1 Generating Facility Modifications*

The facility will meet all the requirements set forth in the Interconnection Agreement including the ability to operate under voltage control with sufficient reactive capacity to deliver power at

the Point of Interconnection anywhere in the range of +/- 0.95 power factor. The individual wind turbine-generators will also meet the FERC low voltage ride-through criteria.

#### *6.1.1.1.2 Transmission Modifications*

Phase 2 will require the addition of a second step-up transformer/interconnecting line, and corresponding breaker in the ring bus.

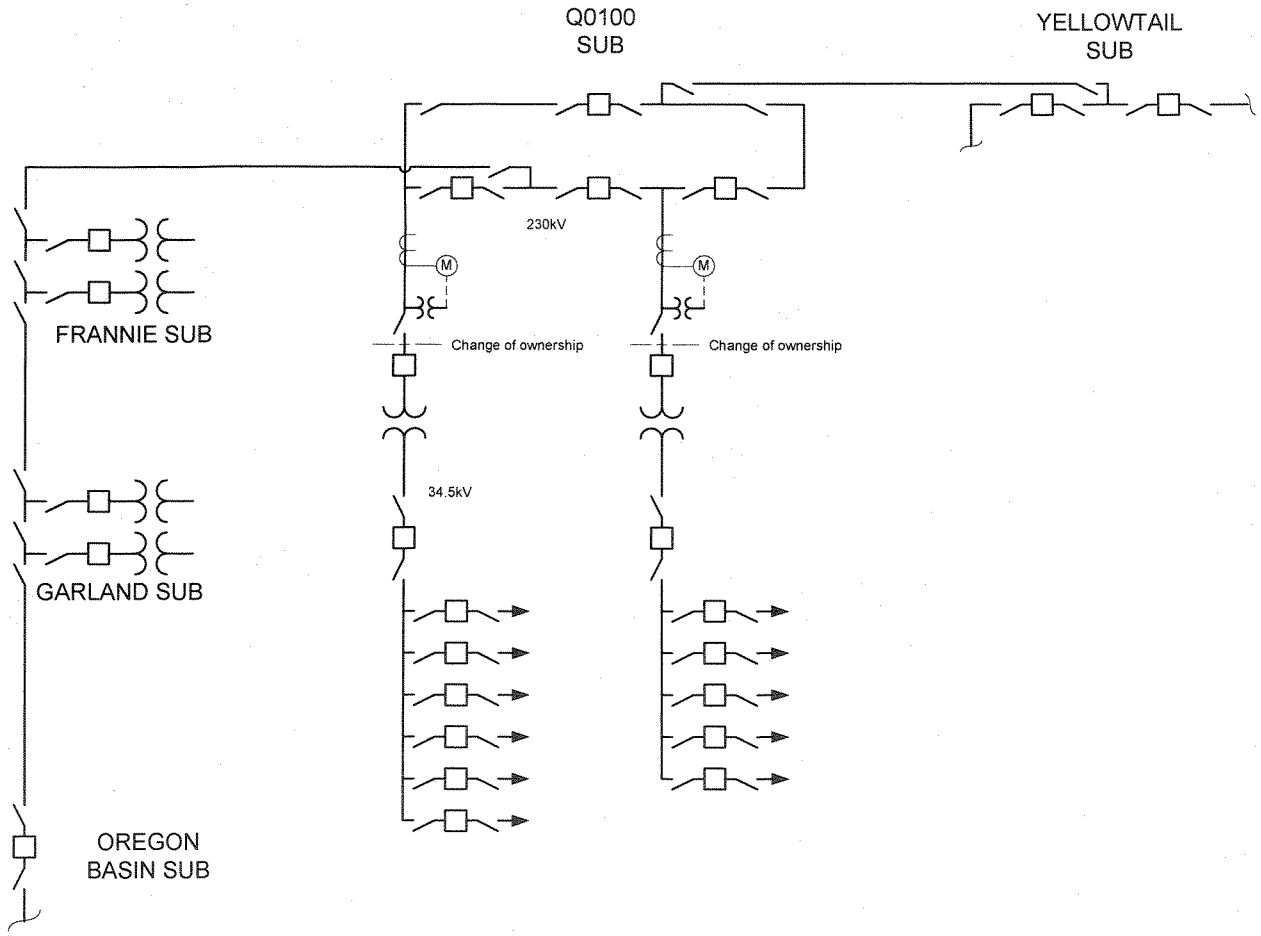


Figure 2 System One Line Diagram

#### *6.1.1.1.3 Existing Circuit Breaker Upgrades*

The increase in the fault duty on the system as a result of the addition of the generation facility with the 33 – 3 MVA generators fed through 1 – 75/100/125/140MVA step up transformer with 9.5% impedance in the addition to Phase 1 of the Interconnection Customer's project will not push the fault duty above the interrupting rate of any of the existing fault interrupting equipment.

#### *6.1.1.1.4 Protection Requirements*

Since the 230kV switching station was developed in Phase 1 for the interconnection of one transformer; this Phase for the interconnection of the generation will only require of the addition of the facilities for the addition of the second transformer as shown on figure 2 System One Line Diagram.

The protection for the tie line between the switching station and the Interconnection Customer's substation can be a bus differential relay if the ground mats of the two stations are connected. In addition to the line protective relaying a relay used for under/over voltage and over/under frequency protection of the system will be installed at switching station. If the voltage, magnitude or frequency, is outside of the normal operation range this relay will trip open all of the Interconnection Customer's 34.5 kV line breakers at the collector station.

#### *6.1.1.1.5 Data (RTU) Requirements*

With phase 2 will be the addition of the following to the existing RTU:

From the Switching Station:

Analogs:

- Net Generation MW
- Net Generator MVAR

Accumulator Pulses:

- Interchange metering kWH

From the Collector Station:

Analogs:

- Real power flow through each of the 34.5kV line feeder breakers
- Reactive power flow through each of the 34.5kV line feeder breakers
- Reactive power flow from each of the shunt capacitor banks
- A phase 230kV transmission voltage
- B phase 230kV transmission voltage
- C phase 230kV transmission voltage

Status:

- All 34.5 and 230kV breakers and circuit switchers
- Line relay trouble alarm

The interchange real power MW will need to be telemetered to the Transmission Provider's Alternate Energy Control Center at Casper Substation independent of the analog supplied to the

### 6.1.2 Cost Estimate (Incremental to Phase 1)

| | |
|---|---|
| Interconnection – Direct Assigned Facilities | $0 |
| Interconnection – Network Upgrades | $ 0 |
| **Total Cost – ER Interconnection Service – Interconnection Only** | **$0** |

### 6.1.3 Schedule (Incremental to Phase 1)

The incremental schedule should be relatively short.

### 6.1.4 Maximum Amount of Power that can be delivered into Network Load, with No Transmission Modifications (for informational purposes only)

All of the power can be delivered into Transmission Provider's network load, provided that transmission modifications required for Phase 1 are in place.

### 6.1.5 Additional Transmission Modifications Required to Deliver 100% of the Power into Network Load (for informational purposes only)

Requirements

If delivery to Network Loads in Utah is required, then the project could participate in the construction of two new 500 kV lines from Bridger to the International switchyard in the Salt Lake City area (for higher priority queue requests). This conceptual project will be designed to deliver 2255 MW of power (2000 MW for third parties and 255 MW for the Interconnection Customer). However, these new lines cannot be in-service by the 12/31/2008/2009/2010 Phase A/B/C dates requested by the Interconnection Customer. As such, delivery to loads in Utah could not begin until these lines are in-service.

Cost Estimate

The cost of facilities to deliver power to network loads in Utah will be assumed to be allocated to Interconnection Customer's on a pro rata basis based on delivered capacity. For the purpose of an estimate for this report, for this phase, the Interconnection Customer will be responsible for an incremental 99 MW share of the total 2255 MW.

The following cost information is based on block estimates or other generalized data. Actual costs may significantly differ due to factors including, but not limited to, price changes for raw and manufactured products (switches, transformers, aluminum, steel, concrete, etc.), differences in route as well as land or rights-of-way costs, changes in design or configuration, line design, voltage, and number of circuits. This is an order-of-magnitude estimate and is intended for informational purposes only.

| Description | Estimated Cost $2007 |
|---|---|
| 99MW/2255MW (4.3%) | $66,000,000 |
| | |
| **Total Cost – ER Interconnection Service – 100% Deliverability** | **$66,000,000** |

## 6.2 Network Resource (NR) Interconnection Service

### 6.2.1 Study Results

The results are the same as the total results under Section 6.1 (for ER Interconnection Service). The combined results are the outcome of the NR Service study.

6.2.1.1 Requirements

The requirements are the same as the total requirements under Section 6.1 (for ER Interconnection Service). All are required for NR interconnection service.

6.2.1.2 Cost Estimate

This section identifies the installed cost estimate (in current year dollars) for Transmission Provider's Interconnection Facilities and Network Upgrade Requirements for NR Service. The resulting estimated cost is the sum of the cost under Section 6.1 (for ER Interconnection Service).

| | |
|---|---|
| ER Interconnection Service – Interconnection Only | $0 |
| ER Interconnection Service – 100% Deliverability | $66,000,000 |
| **Total Cost – NR Interconnection Service** | **$66,000,000** |

Schedule

The schedule should be relatively short.

# 7.0 PHASE 3 – 57 MW - (ADDITIONAL TO PHASES 1 AND 2)

## 7.1 Energy Resource (ER) Interconnection Service

### 7.1.1 Study Results

7.1.1.1 Requirements

#### *7.1.1.1.1 Generating Facility Modifications*

The facility will meet all the requirements set forth in the Interconnection Agreement including the ability to operate under voltage control with sufficient reactive capacity to deliver power at the Point of Interconnection anywhere in the range of +/- 0.95 power factor. The individual wind turbine-generators will also meet the FERC low voltage ride-through criteria.

#### *7.1.1.1.2 Transmission Modifications*

Phase 3 will not require additional transmission modifications. The interconnection configuration will be the same as for Phase 2.

#### *7.1.1.1.3 Existing Circuit Breaker Upgrades – Short Circuit*

The increase in the fault duty on the system as a result of the addition of the generation facility with the 19 – 3 MVA generators fed the through the existing 1 – 75/100/125/140MVA step up transformer with 9.5% impedance in the addition to Phase 1 and 2 of the Interconnection Customer's project will not push the fault duty above the interrupting rate of any of the existing fault interrupting equipment.

#### *7.1.1.1.4 Protection Requirements*

Since the 230kV switching station was developed in Phase 1 and 2 for the interconnection of two transformers and the additional generation of Phase 3 will be fed through these existing transformers; Phase 3 will not require any additional facilities for the connection of the additional generators.

#### *7.1.1.1.5 Data (RTU) Requirements*

With phase 3 will be the addition of the following to the existing RTU:

From the Collector Station:

Analogs:

- Real power flow through each of the 34.5kV line feeder breakers
- Reactive power flow through each of the 34.5kV line feeder breakers
- Reactive power flow from each of the shunt capacitor banks

Status:

- All 34.5 breakers

#### *7.1.1.1.6 Other Modifications*

Other modifications will be discussed in the system impact study report.

### 7.1.2 Cost Estimate

Minimal costs will be required in addition to Phase II.

| | |
|---|---|
| Interconnection – Direct Assigned Facilities | $ |
| Interconnection – Network Upgrades | $ 0 |
| **Total Cost – ER Interconnection Service – Interconnection Only** | **$ 0** |

### 7.1.3 Schedule

The schedule should be relatively short.

### 7.1.4 Maximum Amount of Power that can be delivered into Network Load, with No Transmission Modifications (for informational purposes only)

All of the power can be delivered into Transmission Provider's network load, provided that transmission modifications required for Phase 1 are in place.

### 7.1.5 Additional Transmission Modifications Required to Deliver 100% of the Power into Network Load (for informational purposes only)

Transmission Modifications

All of the power can be delivered into Transmission Provider's network load, provided that transmission modifications required for Phase 1 are in place.

Cost Estimate

The cost of facilities to deliver power to network loads in Utah will be assumed to be allocated to Interconnection Customer's on a pro rata basis based on delivered capacity. For the purpose of an estimate for this report, for this phase, the Interconnection Customer will be responsible for an incremental 57 MW share of the total 2255 MW.

The following cost information is based on block estimates or other generalized data. Actual costs may significantly differ due to factors including, but not limited to, price changes for raw and manufactured products (switches, transformers, aluminum, steel, concrete, etc.), differences in route as well as land or rights-of-way costs, changes in design or configuration, line design, voltage, and number of circuits. This is an order-of-magnitude estimate and is intended for informational purposes only.

| Description | Estimated Cost $2007 |
|---|---|
| 57MW/2255MW (2.5%) | $38,000,000 |
| | |
| **Total Cost – ER Interconnection Service – 100% Deliverability** | **$38,000,000** |

## 7.2 Network Resource (NR) Interconnection Service

### 7.2.1 Study Results

The results are the same as the total results under Section 7.1 (for ER Interconnection Service). The combined results are the outcome of the NR Service study.

7.2.1.1 Requirements

The requirements are the same as the total requirements under Section 7.1 (for ER Interconnection Service). All are required for NR interconnection service.

7.2.1.2 Cost Estimate

This section identifies the installed cost estimate (in current year dollars) for Transmission Provider's Interconnection Facilities and Network Upgrade Requirements for NR Service. The resulting estimated cost is the sum of the cost under Section 7.1 (for ER Interconnection Service).

| | |
|---|---|
| ER Interconnection Service – Interconnection Only | $0 |
| ER Interconnection Service – 100% Deliverability | $38,000,000 |
| **Total Cost – NR Interconnection Service** | **$38,000,000** |

7.2.1.3 Schedule

The schedule should be relatively short.

## 8.0 PARTICIPATION BY AFFECTED SYSTEMS

This study will be shared with Basin Electric Power Cooperative, Western Power Administration, and Black Hills Power Company.