Dustin Pike

BIG HORN TRANSMISSION 5-YEAR STUDY

© 2000 PACIFICORP | PAGE 1

ROCKY MOUNTAIN POWER
A DIVISION OF PACIFICORP

Big Horn Study

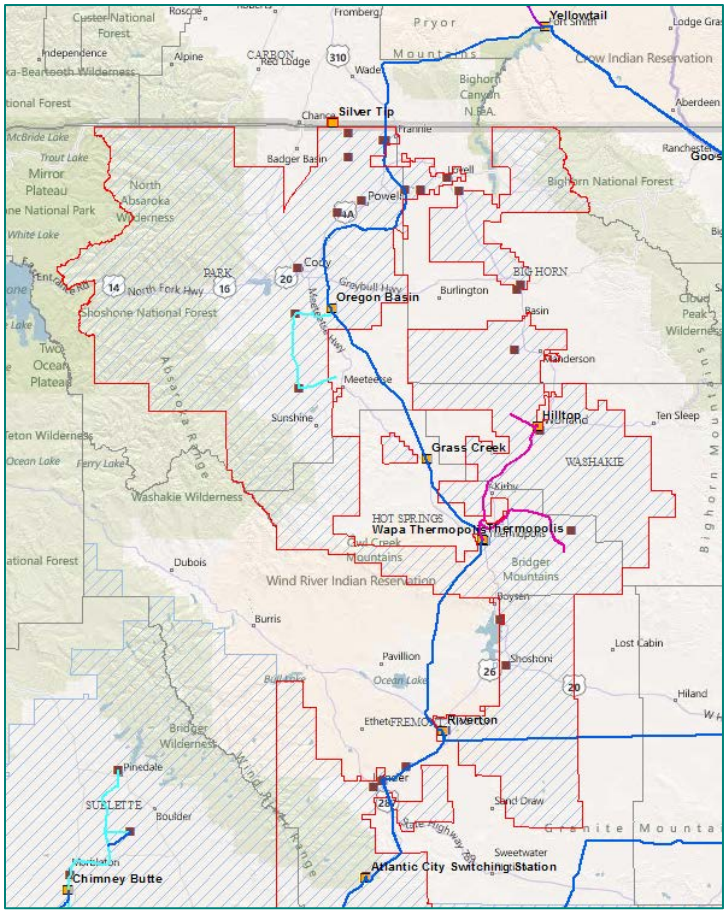

- The Big Horn Study encompasses portions of Big Horn, Washakie, Hot Springs, Park, and Fremont counties.
- Cities served includes Riverton, Thermopolis, and Worland.
- The service territory is outlined in red.

© 2000 PACIFICORP | PAGE 2

ROCKY MOUNTAIN POWER
A DIVISION OF PACIFICORP

Big Horn Study

- Covers approx. 9,000 square miles of area.
- There are 13 PacifiCorp-owned substations in the area.
- Transmission voltages include 230 kV, 115 kV, and 69 kV.
- Other power companies in the area include Western Area Power Administration and Tri-State.

Western Area Power Administration

TRI-STATE Generation and Transmission Association, Inc.

A Touchstone Energy® Cooperative

© 2000 PACIFICORP | PAGE 3

ROCKY MOUNTAIN POWER
A DIVISION OF PACIFICORP

Area Load Projections

- Base System Loads
  - Summer 2012: 419 MVA
  - Winter 2011-2012: 426 MVA
- Growth
  - Summer: 0.8%
  - Winter: 1.3%
- Projected System Loads
  - Summer 2016: 434 MVA
  - Winter 2015-16: 440 MVA

© 2000 PACIFICORP | PAGE 4

ROCKY MOUNTAIN POWER
A DIVISION OF PACIFICORP

N-0 System Improvements

- Oregon Basin Transformer Replacement
  - Replace the existing 230-69 kV 40 MVA transformer with a 230-69 kV 75 MVA LTC transformer.
  - Boosts the voltage on the 69 kV system as well as provides enough capacity for future growth.
  - Scheduled to be in by July 1, 2014.

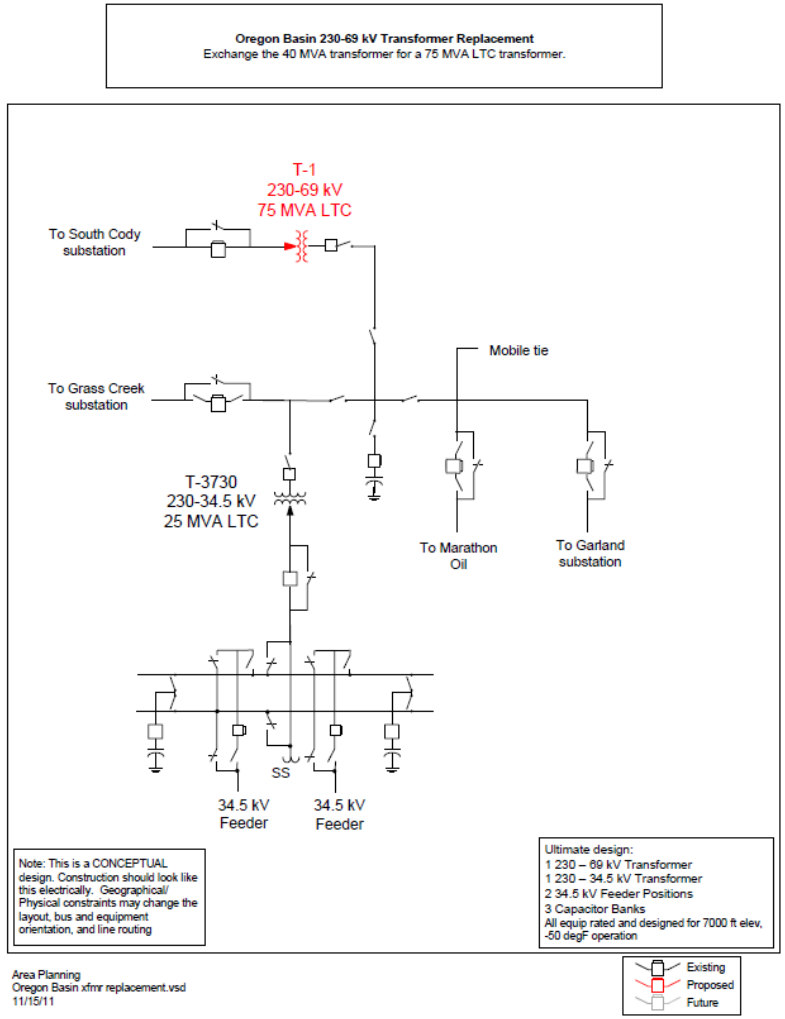

ROCKY MOUNTAIN POWER
A DIVISION OF PACIFICORP

N-0 System Improvements

- South Cody and Pitchfork Distribution Capacitor Bank Installation
  - Installation of two 1.2 MVAR switched distribution capacitor banks at South Cody substation.
  - Installation of one 1.2 MVAR switched distribution capacitor bank at Pitchfork substation.
  - Costs are covered as part of the Oregon Basin upgrade project.
  - In-service date is the end of 2012.
  - Provides enough voltage support on the 69 kV system to last until the new transformer is installed at Oregon Basin substation.

© 2000 PACIFICORP | PAGE 6

ROCKY MOUNTAIN POWER
A DIVISION OF PACIFICORP

Construction Schedule

- 2012 N/A
  - Installation of two 1.2 MVAR switched distribution cap banks at South Cody substation and one 1.2 MVAR switched distribution cap bank at Pitchfork substation.
- 2013 $0.9 M
  - Replacement of all 3 low-side breakers at Columbia Geneva substation.
- 2014 N/A
  - Replace the existing 230-69 kV transformer at Oregon Basin substation.
- 2015 N/A
- 2016 N/A
- Total cost: approx. $0.9 M

© 2000 PACIFICORP | PAGE 7

ROCKY MOUNTAIN POWER
A DIVISION OF PACIFICORP

Big Horn Study

- Any Questions or Comments?

© 2000 PACIFICORP | PAGE 8

ROCKY MOUNTAIN POWER
A DIVISION OF PACIFICORP