OASIS ID No.	POI	FeasA	SIS	FacS	Location
Table of Contents					
IA-PNM-2001-11 SIS	McKinley		Oct-03		Western
IA-PNM-2001-11 FacS				Oct-04	Western
IA-PNM-2003-06 SIS	KM Line		May-06		Western
IA-PNM-2003-06 FacS				Aug-07	Western
IA-PNM-2007-15 FeaS	Milan	10/21/2008			Western
IA-PNM-2007-15 SIS			4/23/2009		Western
IA-PNM-2008-12	Bluewater	5/29/2009			Western

XXXXXXXX Interconnection System Impact Study

Final Report
October 2003

Prepared by:

Public Service Company of New Mexico

Electric Services
Transmission Development & Contracts

Foreword

Public Service Company of New Mexico ("PNM") performed this System Impact Study in response to an interconnection request by XXXXXXXX ("XXXX"). The studies conducted are based on the Study Scope executed in January 2003, as amended.

Any correspondence concerning this document, including technical and commercial questions should be referred to:

Director of Transmission Development and Contracts
Public Service Company of New Mexico
Alvarado Square MS-0604
Albuquerque, NM 87158
Phone: (505) 241-4570
Fax: (505) 241-4363

Table of Contents

1 EXECUTIVE SUMMARY 1

2 INTRODUCTION 3

2.1 Methodology and assumptions 3

2.2 Criteria 7

3 STEADY-STATE ANALYSIS 9

3.1 Voltage Profile and Reactive Power Performance 9

3.2 Equipment Overloads 9

3.3 Effect of the Project on transmission losses 11

4 SHORT CIRCUIT STUDIES 12

5 TRANSIENT STABILITY ANALYSIS 13

6 VOLTAGE STABILITY ANALYSIS 13

7 CONCLUSIONS 14

List of Tables

Table 1. Base case nomenclature for each dispatch scenario.....4
Table 2. Summary of load and losses (MW) for the 2009 base cases without the Project...5
Table 3. Load-side generation resources.....6
Table 4. Pre-existing equipment overloads.....10
Table 5. Equipment overloads due to the addition of the Project.....11
Table 6. Effect of the Project on transmission system losses (MW) 12
Table 7. Summary of short circuit studies 12
Table 8. N-1 voltage stability limits (MW), heavy summer, no load-side generation.....13

List of Figures

Figure 1. One-line diagram of the Project.....3

1 Executive Summary

Public Service Company of New Mexico ("PNM") performed this System Impact Study in response to an interconnection request by XXXXXXXX ("XXXX"). The studies conducted are based on the Study Scope executed in January 2003, as amended[1]. The request is for a 300 MW coal-fired plant located south Hospah/Mustang, in McKinley County, NM. ("Project"). The proposed interconnection point is 30 miles north of Ambrosia 230 kV on PNM's Bisti – Ambrosia 230 kV ("BI") line. The proposed in-service date is April 2009.

The purpose of this study is to determine the impact to the transmission system due to the interconnection of the Project, and to identify, on a preliminary basis, the system reinforcement required to interconnect the Project to the PNM transmission system. This System Impact Study does not determine PNM's ability to provide transmission delivery service for the Project output. The final design and costing of the system reinforcements required for interconnection will be undertaken in the Facilities Study, should XXXX decide to pursue this Project.

The study approach was to test the system steady state and transient performance with the Project in service against the reliability criteria set forth in the Study Scope. Fault duty and voltage stability studies were also conducted. Forecasted loading and transmission configuration for the 2009 peak summer season were used.

Listed below is a summary of the reinforcements needed for the interconnection of the Project, based on the results of the system impact study:

- The West Mesa 230/115 kV #1 transformer outage overloads the remaining West Mesa 230/115 kV transformer by 34%. Should XXXX decide to pursue the Project, a transformer loss of life study will be commissioned as part of the Facility Study to determine whether this overload is acceptable or a the installation of a third 230/115 kV transformer is required.

- Increase the rating of the Ambrosia – Kermac Tap 115 kV ("MA") line and Kermac Tap – West Mesa 115 kV ("KM") line to 167 MVA and 161 MVA, respectively, to mitigate overloads caused by the Ambrosia – West Mesa 230 kV N-1 outage. Subject to further study, these higher emergency ratings can be achieved by phase-raising the MA and KM lines, and replacing the existing line relaying and switching equipment.

[1] Study Scope Agreement Between PNM and XXXXXXXX, January 2003. With XXXX's concurrence, Study Scope was later revised to reflect changes in PNM's Northern New Mexico Transmission Expansion Project.

System performance with respect to operating voltages, reactive power flows, short circuit duty and transient stability are not adversely affected. PNM's import capability and load-serving capability are not affected significantly. Therefore, the need for any transmission upgrades that PNM is presently pursuing is not deferred or removed.

The studies indicate that the interconnection of the Project is feasible with the system improvements defined herein. The results of this System Impact Study are preliminary and subject to change based on more detailed analyses. Such analyses will be conducted in the Facility Study, should XXXX decide to pursue this Project.

2 Introduction

Public Service Company of New Mexico ("PNM") performed this system impact study in response to an interconnection request by XXXXXXXX ("XXXX") submitted in July 2001. The proposed project consists of a 300 MW coal fired plant located south Hospah/Mustang, in McKinley County, NM ("Project")[2]. The proposed interconnection point is on the Bisti – Ambrosia 230 kV line, approximately 30 miles north of Ambrosia 230 kV. The proposed in-service date is April 2009. A diagram of the Project is shown in Figure 1 below.

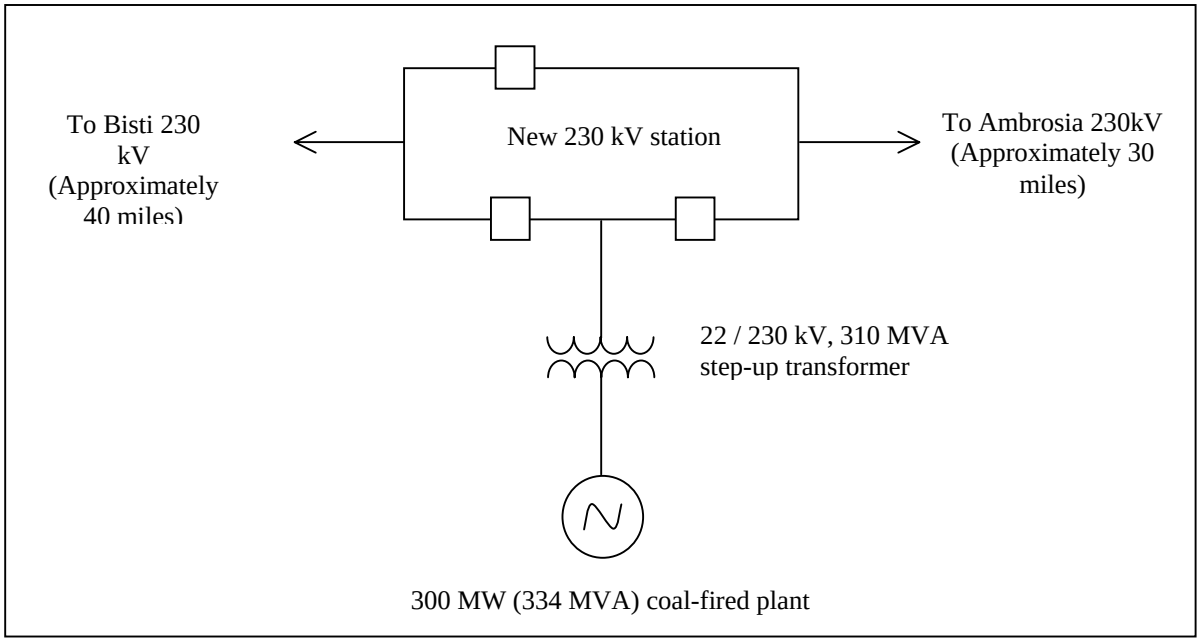

Figure 1. One-line diagram of the Project

The purpose of this study is to determine the impact to the transmission system due to the interconnection of the Project, and to identify, on a preliminary basis, the system reinforcement required to interconnect the Project to the PNM system. The final design and costing of the system reinforcements required for interconnection will be undertaken in the Facilities Study, should XXXX decide to pursue this Project.

2.1 Methodology and assumptions

The basic study approach was to test the system performance with the Project at full output, with the planned transmission system configuration and forecast load for the 2009

[2] The original request was for a 500 MW coal-fired plant.

summer season. The specific scenarios studied are described below. In all cases, the excess Project's output was displaced at San Juan/Four Corners. Table 1 shows the nomenclature used for the base cases.

Scenario 1 Benchmark performance of the 2009 system without the Project. These benchmark studies are conducted with maximum load-side generation and without load-side generation.

Scenario 2 Scenario **1** augmented with the Project.

Scenario 3 Scenario **2** with the Prewitt Escalante Generating Station ("PEGS") generation at minimum generation (100 MW).

Scenario 4 Scenario 1 without load-side generation augmented with the Project, without the Rio Puerco 345/115 kV transformer[3]

Table 1. Base case nomenclature for each dispatch scenario

Scenario	2009 heavy summer without load-side generation	2003 heavy summer with maximum load-side generation
1 (benchmark)	09hs-nls	09hs
2	09hs-nls-mus	09hs-mus
3a (benchmark)	09hs-nls-nop	09hs-nop
3b	09hs-nls-mus-nop	09hs-mus-nop
4a (benchmark)	09hs-nls-nor	N/A *
4b	09hs-nls-mus-nor	N/A *

* Scenarios without load-side generation represent worst-case conditions.

Powerflow plots for each base case studied are included in Appendix B. For each scenario, power flow and transient stability analyses were performed for credible N-1, N-2 and breaker failure contingencies. Appendix A shows a list of all the contingencies studied. Fault duty and voltage stability studies were also conducted for each scenario.

The base cases studied were generated from the Western Electricity Coordinating Council ("WECC") 2007 heavy summer base case (2007HS1A) with the load scaling and network modifications as summarized below.

- The PNM, Tri-State Generation and Transmission, Inc. ("TSGT"), and Los Alamos County ("LAC") loads adjusted to the 2009 forecast. As shown in Table 2 below, LAC and TSGT losses are not affected by the interconnection of the Project.

[3] This scenario was added after the draft report SIS was issued, to reflect a planned delay of the Rio Puerco 345/115 kV transformer.

Table 2. Summary of load and losses (MW) for the 2009 base cases without the Project

Case	PNM		TSGT		LAC	
	Load	Losses	Load	Losses	Load	Losses
2009 HS without load-side generation	1584	91.6	408	14.5	94.2	0.6
2009 HS with maximum load-side generation	1584	67.4	408	16.0	94.2	0.6

- The Albuquerque power factor was maintained at 98.7% in accordance with PNM's Distribution Operations planning criteria.

- The Taiban Mesa wind farm and associated transmission upgrades was included. This project interconnects on the Blackwater – BA 345 kV ("BB") line, approximately 60 miles West of Blackwater[4]. For powerflow and transient stability studies, the output of the wind farm was assumed to be 10 MW. This generation dispatch scenario is typical for the summer season, and represents a limiting system condition.

- A proposed 286 MW generation project and associated transmission upgrades was included. This project interconnects with PNM's 115 kV system in Valencia County[5] ("Valencia Generator").

- For Scenarios 1-3, a new 345/115 kV 448 MVA transformer and new 345 kV station which taps the BA - West Mesa 345 kV line at Rio Puerco was included. It was also assumed that a new 115 kV line emanating from this station is in service to serve Albuquerque area load. A sensitivity study (Scenario 4) was conducted to without the Rio Puerco 345 kV transformer and 115 kV line to reflect a delay in the construction of these system upgrades[6].

- The facilities listed in Table 3 are considered as load side generation for the purposes of this system impact study[7].

---

[4] FPL Energy Facility Study, Taiban Mesa Wind Farm Project, Final Report, March 2003.

[5] Valencia Generation Facility Interconnection Impact Study Final Report – December 2002. A Facility Study is presently being conducted for this project.

[6] The proposed in-service date for the new Rio Puerco 345/115 kV transformer and 115 kV line has been delayed from 2008 to 2012.

[7] For powerflow studies of "no load-side-generation" scenarios, two or more of the Reeves units were dispatched at minimum output.

Table 3. Load-side generation resources

Facility	Maximum MW
Reeves 1	44
Reeves 2	43
Reeves 3	67
Delta Person	139
Valencia Generator	286

- TSGT's Moriarty and Willard loads power factor were increased to 0.98 pu and the corresponding transformer ratings were increased to 18 MVA and 40 MVA, respectively, to avoid repeatedly tabulating associated criteria violations unrelated to the Project.

- For powerflow and transient stability studies, the Blackwater converter was represented with a back-to-back HVDC model dispatched at 50 MW westbound.

- All contingencies were modeled as breaker-to-breaker outages, assuming all lines in service before the contingency.

- The following assumptions were made with respect to the proposed Project:

  - The Project was integrated at a new 3-breaker 230 kV station constructed on the Bisti – Ambrosia 230 kV line, approximately 30 miles from Ambrosia.

  - The Project output was displaced at San Juan/Four Corners area.

  - The Project was represented with powerflow and dynamic models provided by XXXX. The dynamic and powerflow models with corresponding parameter values are listed in Appendix E.

- For contingency power flow studies, the following assumptions were applied:

  - All manually operated voltage control and phase shifting devices are fixed at pre-contingency levels and states.

  - All load-side resources are operated such that the pre-disturbance Mvar output is held at or close to zero.

  - All generators controlling a high side remote bus were set at the pre-disturbance voltage at the terminal bus except for PEGS, San Juan and ETA SVC.

- The Valencia, Delta-Person, Reeves and ETA SVC pre-outage reactive limits were changed from their minimum Mvar limit to their corresponding Mvar limit as defined on their capability curve. Their corresponding voltage schedule was changed to match the actual solved pre-outage voltage.

- All buses, lines, and transformers with base voltages greater than 1 kV in the New Mexico area were monitored in all study cases. The 46 kV system voltages are not monitored since the distribution voltages are monitored.

- Post-contingency voltage violations were tabulated only if they deviated more than 0.005 pu from the normal system voltage. To clarify, if a bus had a low voltage violation in the normal condition and decreased no more than 0.005 pu in the outage condition, the bus would not be reported. Similarly, post-contingency element loadings were tabulated only if they increased more than 1% from the normal system loading. To clarify, if an element was overloaded in the normal condition and increased no more than 1% in the outage condition, the overload would not be reported.

- For transient stability studies, the following assumptions were applied:

  - Governors were set out-of-service on steam generators with governor Pmax over 150 MW and loading over 90% of governor Pmax.

  - For normally cleared 345 kV three-phase faults, 3-cycle and 4-cycle breaker clearing times were used for the near end and far end breakers, respectively.

  - For single-phase initiating 345 kV faults with stuck breakers the primary and backup clearing times were 4 cycles and 15 cycles, respectively.

  - Stability simulations were run to 10 seconds.

2.2 Criteria

NERC/WECC Planning Standards[8] endorsed by the National Electric Reliability Council ("NERC") and WECC were applied as the minimum system performance required under normal and contingency conditions. The basic system performance requirements are listed below:

- Changes in bus voltages from pre- to post-contingency must be less than 5% and 10% for single and double contingencies, respectively.

[8] NERC/WECC Planning Standards, August 2001. This document is accessible through the Internet at http://www.wecc.biz

- All equipment loadings must be below their normal ratings under normal conditions.

- All line and transformer loadings must be below their normal ratings for both single and double contingencies.

- Following fault clearing for single contingencies, voltage on load buses may not dip more than 25% of the pre-fault voltage or dip more than 20% of the pre-fault voltage for more than 20 cycles. For double contingencies, voltage on load buses may not dip more than 30% of the pre-fault voltage or dip more than 20% of the pre-fault voltage for more than 40 cycles.

PNM's additions and exceptions to the WECC criteria are stated below:

- For voltage levels between 1 kV and 13.8 kV, the minimum and maximum are 0.91 pu and 1.05 pu, respectively.

- For voltage levels between 13 kV and 345 kV, the minimum and maximum are 0.95 pu and 1.05 pu, respectively, for N-1 contingencies. For N-2 and breaker failures the minimum voltage level is 0.90 pu.

- Changes in bus voltages from pre- to post-contingency must be less than 6% with the exception of the Deming area, which is held to the El Paso Electric Company's criterion of 7% voltage drop for N-1 outages. PNM allows no greater than a 10% voltage drop for N-2 and breaker failures outages.

- The maximum steady state voltage and transient swing voltages for the BB line are 1.1 pu and 1.2 pu, respectively. However, the steady state voltage level on the BA 345 kV bus and Mustang 345 kV bus must be 1.05 pu or less.

Tri-State Generation and Transmission, Inc. additional criteria for contingencies are listed below:

- The minimum and maximum bus voltages for normal operation are 0.95 pu to 1.05 pu, respectively.

- The minimum and maximum bus voltages for outage conditions are 0.90 pu to 1.10 pu, respectively.

- Changes in bus voltages from pre- to post-contingency must be less than 6% for Tri-State buses served from the PNM system. For Tri-State buses served from the Tri-State system, no voltage change criterion shall apply.

3 Steady-State Analysis

This section summarizes steady-state system performance (voltage and equipment overloads) during normal and contingency conditions. Only summer peak cases were considered in this study since this system condition is the most constraining. All studies were conducted assuming all lines in service prior to applying the outages. The list of contingencies studied is shown in Appendix A. Appendix C contains a complete set of data tables that support the conclusions of the steady state analysis.

3.1 Voltage Profile and Reactive Power Performance

Post-contingency voltages in the PNM study area are within criteria with and without the Project. The addition of the proposed Project does not adversely affect PNM's ability to maintain steady-state transmission voltages within acceptable limits, and does not cause major changes in steady-state reactive power flows.

For the purposes of this study, the proposed 22/230 kV step up transformer was assumed to be at nominal tap position, and the generator was assumed to be regulating the 22 kV voltage at 1.02 pu. The voltage on the 230 kV line at the interconnection point is approximately 1.03 pu. This configuration minimizes reactive power exchange between the PNM transmission system and the Project.

3.2 Equipment Overloads

The pre-existing and Project-related overloads identified in this study occur in the Ambrosia and West Mesa area, and generally occur in the eastbound direction. Therefore, the magnitude of the overloads increases as load side generation and net westbound import on the BB line are reduced.

Table 4 below shows pre-existing overload conditions for the various study scenarios, which are defined in Table 1.Note that the outage of TSGT's Ambrosia – Pegs 230 kV line, either through an N-1 or N-2 outage, overloads TSGT's PEGS – Bluewater 115 kV line. To mitigate this pre-existing overload condition, TSGT has established an operating procedure whereby the PEGS generation is ramped down. This operating procedure also mitigates the remaining overloads in Table 4.

The breaker failure contingency involving the BA – Rio Puerco 345 kV line and BA 345/115 kV transformer (or BA – West Mesa and BA 345/115 kV transformer for Scenario 4) overloads the Norton – Zia 115 kV ("NZ") line, as well as the Norton – Algodones 115 kV ("RL") line. The N-2 contingency involving the San Juan – BA and BA – Rio Puerco 345 kV lines (or San Juan – BA and BA – West Mesa lines for Scenario 4) causes multiple overloads in the Santa Fe and Albuquerque areas. These N-2 contingency overloads are mitigated by increasing load-side generation in the Albuquerque

area and increasing westbound flows through the Blackwater HVDC converter. The addition of the Project does not have a negative impact on these overloads. The overloads in the Santa Fe area are mitigated by the proposed Project Power system upgrades, which includes a new 115 kV line into the Santa Fe area. Until Project Power is completed, load-side generation will be used to mitigate these overloads.

Table 4. Pre-existing equipment overloads

Contingency	Monitored Element	Rating	09hs	09hs-mus	09hs-nls	09hs-nls-mus	09hs-nls-nor	09hs-nls-mus-nor
			Overload %					
AMBROSIA-PEGS 230 (N-1)	BLUEWATR – PEGS 115	728 A	N/A	N/A	7%	N/A	7%	N/A
	TAYLOR_P – BLUEWATR 115	532 A	12%	N/A	23%	6%	23%	6%
	AMBROSIA - TAYLOR_P 115	532 A	11%	N/A	22%	5%	22%	5%
PEGS-AMBROSIA-WESTMESA 230 (N-2)	TAYLOR_P – BLUEWATR 115	532 A	N/A	N/A	4%	N/A	4%	N/A
	AMBROSIA - TAYLOR_P 115	532 A	N/A	N/A	3%	N/A	3%	N/A
PEGS-AMBROSIA 230 & AMBROSIA XFM (N-2)	TAYLOR_P – BLUEWATR 115	532 A	N/A	N/A	7%	5%	8%	5%
	AMBROSIA - TAYLOR_P 115	532 A	N/A	N/A	7%	4%	7%	4%
BA-RIOPUERCO 345 & BA XFM (N-2) (BA-WESTMESA 345 & BA XFM for Scenario 4)	NORTON – MEJIA_T 115	798 A	N/A	N/A	14%	10%	18%	14%
	MEJIA_T – SFAIRPRT 115	798 A	N/A	N/A	6%	2%	10%	5%
	SFAIRPRT – ZIA 115	798 A	N/A	N/A	6%	2%	10%	5%
	NORTON – AIRPOTT 115	400 A	N/A	N/A	13%	5%	14%	5%
	AIRPOTT – ALGODONE 115	400 A	N/A	N/A	6%	N/A	7%	N/A
	ALGODONE – MORIARTY 115	226 A	N/A	N/A	12%	12%	14%	12%
SAN JUAN–BA–RIOPUERCO (N-2) (SAN JUAN–BA–WESTMESA for Scenario 4)	OJO 345/115	180 MVA	N/A	N/A	4%	N/A	33%	4%
	NORTON_2-HERNANDZ 115	879 A	N/A	N/A	3%	N/A	46%	2%
	OJO-HERNANDZ 115	900 A	N/A	N/A	5%	N/A	37%	5%
	COTTONWT-IRVING 115	1004 A	N/A	N/A	N/A	N/A	22%	2%
	PRAGER–PNPL 115	899 A	N/A	N/A	N/A	4%	13%	18%
	WESTMS_1-WESTMS_T 115	1099 A	N/A	N/A	N/A	N/A	53%	14%
	WESTMS_2-MARIPOSA 115	783 A	N/A	N/A	N/A	N/A	8%	12%
	WESTMS_T-IRVING 115	1099 A	N/A	N/A	N/A	N/A	53%	14%
	WESTMESA-FOURCORN 345	1680 A	N/A	N/A	N/A	N/A	9%	N/A
	AMBROSIA-KERMACT 115	660 A	N/A	N/A	N/A	9%	N/A	1%

Table 5 shows equipment overloads that are caused (or significantly worsened) by the addition of the Project.

The outage of one of the West Mesa 230/115 kV #1 transformer overloads the remaining West Mesa 230/115 kV transformer by 34% without load-side generation. PNM's Bulk Transformer Policy dated September 2002, does not allow for continuous or temporary overloads of bulk transformers under normal or N-1 conditions, unless it is determined through a transformer life assessment study that a higher rating can be achieved without loss of life to the transformer. Should XXXX decide to pursue the Project, a transformer

loss of life study will be commissioned as part of the Facility Study to determine whether this overload is acceptable or the installation of a third 230/115 kV transformer is required.

The Ambrosia – West Mesa 230 kV N-1 outage, overloads the Ambrosia – Kermac Tap 115 kV ("MA") line and Kermac Tap – West Mesa 115 kV ("KM") line by 27% and 23%, respectively. PNM policy does not permit re-dispatch as a mitigation alternative for N-1 overloads; therefore, this overload condition must be mitigated by increasing the rating of the KM and MA line to 838 A (167 MVA) and 812 A (162 MVA), respectively. Subject to further study, these higher emergency ratings can be achieved by phase-raising the MA and KM lines, and replacing the existing line relaying and switching equipment.

Two breaker-failure contingencies resulted in equipment overloads. As explained below, no system upgrades are required to mitigate these overloads. The overloads caused by the PEGS – Ambrosia – West Mesa breaker failure contingency are mitigated by an existing TSGT operating procedure whereby PEGS generation is ramped down, as explained in the previous page. The 3% overload of the BA 345/115 kV transformer caused by the BA – West Mesa and West Mesa 345/115 kV transformer breaker failure contingency can be mitigated by increasing load-side generation in the Albuquerque area.

Table 5. Equipment overloads due to the addition of the Project

Contingency	Monitored Element	Rating	09hs	09hs-mus	09hs-nls	09hs-nls-mus	09hs-nls-nor	09hs-nls-mus-nor
			Overload %					
WESTMESA 230/115 XFM 1 (N-1)	WESTMESA 230/115 XFMR 2	200 MVA	N/A	10%	1%	33%	2%	34%
AMBROSIA-WESTMESA 230 (N-1)	AMBROSIA – KERMACT 115	660 A	N/A	3%	N/A	27%	N/A	27%
	KERMACT – RANCHERS 115	660 A	N/A	N/A	N/A	23%	N/A	23%
	SLUCAS_T - GULF_PGT 115	660 A	N/A	N/A	N/A	23%	N/A	23%
	GULF_PGT - MARQUEZT 115	660 A	N/A	N/A	N/A	23%	N/A	23%
	RANCHERS - SLUCAS_T 115	660 A	N/A	N/A	N/A	23%	N/A	23%
PEGS-AMBROSIA-WESTMESA 230 (N-2)	AMBROSIA - KERMACT 115	660 A	N/A	3%	N/A	26%	N/A	27%
	KERMACT – RANCHERS 115	660 A	N/A	N/A	N/A	22%	N/A	23%
	RANCHERS - SLUCAS_T 115	660 A	N/A	N/A	N/A	22%	N/A	23%
	SLUCAS_T - GULF_PGT 115	660 A	N/A	N/A	N/A	22%	N/A	23%
	GULF_PGT – MARQUEZT 115	660 A	N/A	N/A	N/A	22%	N/A	23%
BA–WESTMESA & WESTMESA XFM 1 (N-2)	BA 345/115 XFMR	448 MVA	N/A	N/A	N/A	N/A	N/A	3%

No overloads occurred in the dispatch scenarios with PEGS at minimum generation.

3.3 Effect of the Project on transmission losses

Table 6 shows PNM's and TSGT's transmission system losses with PNM's load-side generation resources at maximum output ("Max lsg") and offline ("No lsg"). The values in

the Table below assume full Project output displaced at San Juan / Four Corners, PEGS at maximum output, and Blackwater HVDC at 50 MW westbound.

Table 6. Effect of the Project on transmission system losses (MW)

Scenario	PNM		TSGT	
	Max lsg	No lsg	Max lsg	No lsg
Benchmark	70.4	118.8	16.3	14.6
With Project	73.1	118.2	18.0	14.6
Change	2.5	-0.6	1.7	0

The addition of the Project increases PNM's and TSGT's transmission system losses by up to 2.5 MW and 1.7 MW, respectively, with maximum load-side generation. The increase in losses is due to higher flows on the 230 kV and 115 kV lines in Western New Mexico, displacing flows on the 345 kV lines from the San Juan/Four Corners area. In the scenarios without load-side generation, system losses are not significantly affected.

4 Short circuit studies

Short circuit studies were conducted to determine if the existing circuit breakers and other substation equipment, particularly at Gallegos, Ambrosia and West Mesa, are adequate to accommodate the additional fault currents associated with the Project. Table 7 below shows the results of the fault study. Appendix F contains more details of the short circuit study. Based on the results, the addition of the Project does not cause fault currents that exceed the rating of existing breakers at Gallegos, Ambrosia and West Mesa.

Table 7. Summary of short circuit studies

Location	Fault Type	Fault MVA with Project online	Breaker Rating
Gallegos Tap 230	3LG	3495	6375
Mustang 230	1LG	2845	TBD
Ambrosia 230	3LG	3028	6375
Ambrosia 115	3LG	1984	5000
West Mesa 345	1LG	6218	23900
West Mesa 230	1LG	3570	6375
West Mesa 115	1LG	6496	8764

5 Transient Stability Analysis

Time domain simulations were conducted for each dispatch scenario to test the transient stability performance of the system. All simulations were carried out to 10 seconds. All lines were assumed to be initially in service.

The Project's turbine, generator and excitation control were represented with models provided by XXXX (see Appendix E). The simulations show that the transient stability response was well damped for all study scenarios (with and without the Project). No post-transient voltage dip criteria violations were found. Selected transient stability plots are included in Appendix D.

6 Voltage Stability Analysis

Voltage stability analyses were conducted to determine the impact of the Project on PNM's steady-state stability margins. The base cases were studied with no load-side generation, since this is the most limiting dispatch scenario. To better assess the effect of the Project on PNM's voltage stability limits, the Northern New Mexico cutest ("NNMI") cutest was re-defined such that the Project interconnection point is outside the cutest.[9] For this study, the Blackwater HVDC and Taiban Wind Farm were dispatched at 200 MW, for a total of 400 MW westbound on the BB line. The proposed Rio Puerco 345/115 kV transformer was assumed to be in service. Table 8 below summarizes the results.

Table 8. N-1 voltage stability limits (MW), heavy summer, no load-side generation

Scenario	Base case NNMI (MW)	Limiting contingency
Benchmark case	1433	Four Corners–West Mesa
With Project	1442	Four Corners–West Mesa

The results of this study indicate that the addition of the Project does not have a significant impact PNM's import capability or load-serving capability. Therefore, the addition of the Project does not have the effect of deferring or removing the need for any planned transmission system upgrades that PNM is presently pursuing.

[9] Traditionally, the Northern New Mexico Import cutest (NNMI) includes the real power flow on the Bisti – Ambrosia 230 kV line measured at Bisti 230 kV. For the purposes of this study, this NNMI component was replaced by the real power flow on the Project - Ambrosia, measured at Project 230 kV.

7 Conclusions

The following system impacts are caused by the addition of the proposed Project to PNM's transmission system and require mitigation to interconnect the Project:

- The West Mesa 230/115 kV #1 transformer N-1 outage overloads the remaining West Mesa 230/115 kV transformer by 34%. Should XXXX decide to pursue the Project, a transformer loss of life study will be commissioned as part of the Facility Study to determine whether this overload is acceptable or a new 230/115 kV transformer is required.

- The Ambrosia – West Mesa 230 kV N-1 outage overloads the Ambrosia – Kermac Tap 115 kV ("MA") line and Kermac Tap – West Mesa 115 kV ("KM") line. To mitigate this overload condition, the rating of the KM and MA line must be increased to 167 MVA and 161 MVA, respectively. Subject to further study, these higher emergency ratings can be achieved by phase-raising the MA and KM lines, and replacing the existing line relaying and switching equipment.

System performance with respect to operating voltages, reactive power flows, short circuit duty and transient stability are not adversely affected. PNM's import capability and load serving capability are not affected significantly; therefore, the need for any transmission upgrades that PNM is presently pursuing is not deferred or removed.

The results of this System Impact Study are preliminary and subject to change based on more detailed analyses. Such analyses will be conducted in the Facility Study, should XXXX decide to pursue this Project.

XXXXXXXXXXX
Facilities Study for the 300 MW Coal-fired Plant

Final Report
October 2004

Prepared by:

Public Service Company of New Mexico

Foreword

This report was prepared for XXXXXXXXXXX by Public Service Company of New Mexico ("PNM"), in accordance with Facility Study Agreement executed in December 29, 2003.

Any correspondence concerning this document, including technical and commercial questions should be referred to:

Director of Transmission Development and Contracts
Public Service Company of New Mexico
Alvarado Square MS-0604
Albuquerque, NM 87158
Phone: (505) 241-4570
Fax: (505) 241-4363

Table of Contents

Introduction 1
Summary of Estimated Cost and Work Schedule 3
Exhibit 1 - Summary of Estimates 5
Component 1: Construction of a new 230 kV switching station 5
Component 2: Improve Line Ratings for the MA and KM 115kV lines 5
Component 3: Installation of new 230/115kV Autotransformer at West Mesa 7
Component 4: Miscellaneous Communications 8
Exhibit 2 – Map showing the physical locations of the facilities 9
Exhibit 3 - Quadrangle map showing the approximate location of the proposed new three-breaker station on the BI 230 kV line 10

Introduction

In accordance with the "Facility Study Agreement" dated December 29, 2003, between XXXXXXXX and Public Service Company of New Mexico ("PNM"), PNM performed a facility study to determine the cost estimates, construction schedule and other relevant issues associated with the interconnection of the 300 MW coal-fired plant ("Project"), located in McKinley County, New Mexico. This work is an extension of the System Impact Study ("SIS") already performed by PNM[1]. The proposed interconnection point is 30 miles north of Ambrosia 230 kV on PNM's Bisti-Ambrosia 230 kV ("BI") line. The proposed in-service date is April 2009.

This report provides the results of PNM's analysis of the facilities necessary to physically and electrically connect the Project to the PNM transmission system and a construction schedule for the installation of these facilities.

The identified facilities established in the SIS Report are listed below and shown in Figure 1.

1) Construction of a new 230 kV switching station on the BI 230 kV line to accommodate the 230 kV line from the Project.
2) Improve Line Ratings for the Ambrosia – Kermac Tap 115 kV ("MA") line and Kermac Tap – West Mesa 115 kV ("KM")
3) Installation of new 230/115kV Autotransformer at West Mesa
4) Miscellaneous Communications (covers item1 and item 3)

[1] XXXXXXXXXX Interconnection System Impact Study, Final Report, October 21, 2003
.

Figure 1

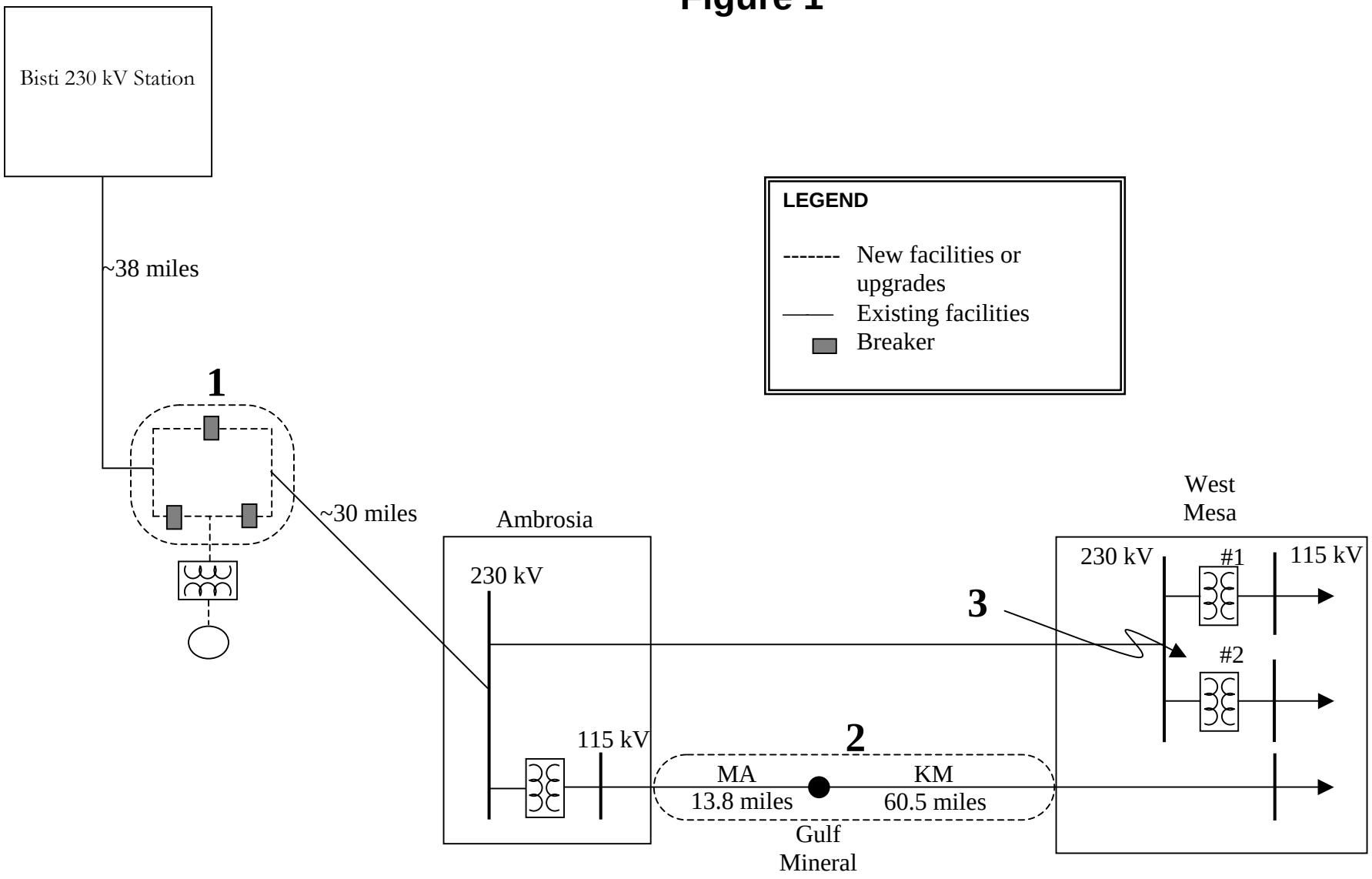
Bisti 230 kV Station
~38 miles
LEGEND
New facilities or upgrades
Existing facilities
Breaker
1
~30 miles
Ambrosia
230 kV
115 kV
2
MA
13.8 miles
KM
60.5 miles
Gulf Mineral
3
West Mesa
230 kV
#1
115 kV
#2

Summary of Estimated Cost and Work Schedule

Costs for Components 1 though 4 are summarized below:

Component 1:	$ 5,845,000
Component 2:	$ 4,663,500
Component 3:	$11,998,000
Component 4:	$ 107,500
Grand Total	$22,614,000

The proposed schedule for final design and construction is estimated to take 34 months from an authorization to begin work. Major activities are presented in the schedules below for components 1 through 3. Component 3 will require staged construction. Schedules are typical and will be revised as project details become firm.

Component 1:

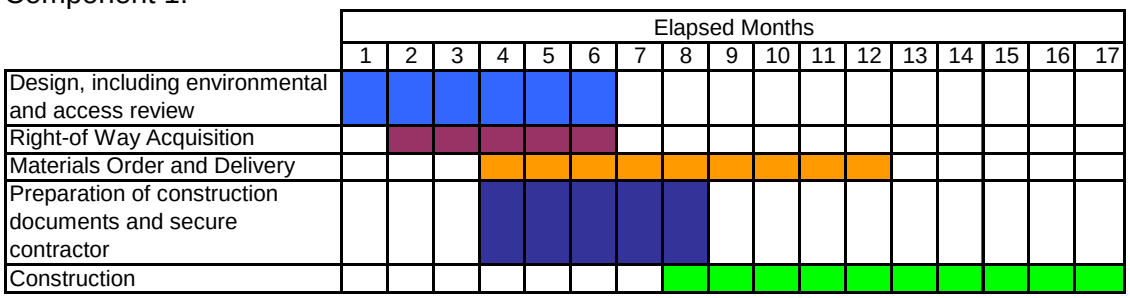

Component 2:

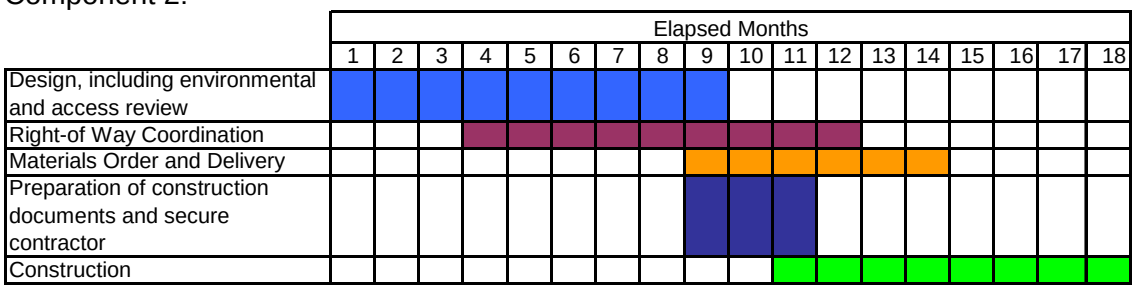

Component 3:

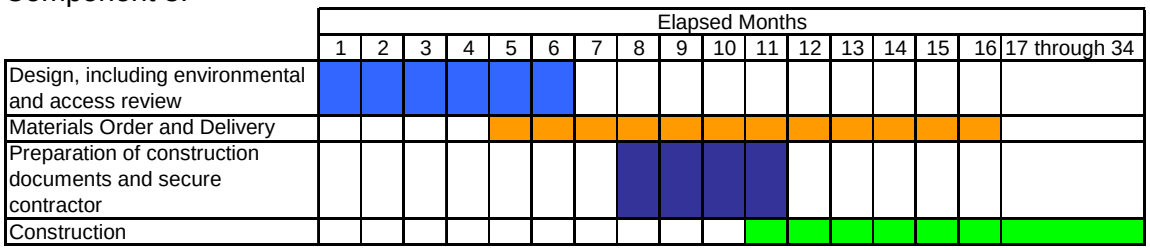

The primary design and engineering considerations and certain assumptions associated with the cost estimates are given in Exhibit 1.

The following maps accompany this study:

- An overall map showing the physical locations of the facilities – Exhibit 2
- A quadrangle map showing the approximate location of the proposed new three-breaker station on the BI 230 kV line. – Exhibit 3

Exhibit 1 - Summary of Estimates

Each component includes a description of the work as well as the key assumptions that were used to develop the estimate. XXXXXX notified PNM on February 27, 2004 that they prefer a general cost estimate and construction schedule for their Project. Therefore, all estimates include either a 20% or 40% contingency as many site conditions, environmental and design requirements are unknown at this time.

Component 1: Construction of a new 230 kV switching station

The estimate includes a new three-breaker 230kV station with ring bus configuration. The station is roughly located 30 miles northwest of the existing Ambrosia Lake station on the Bisti to Ambrosia "BI" 230kV line. A portion of a quadrangle map showing the approximate location of the proposed station is enclosed, see figure titled "Project Number: 10460, Project Description: XXXXX Coal Study, Date: 4/13/2004."

Key assumptions:

- This will be a turnkey project outsourced to an A/E firm.
- The new station will be adjacent to the BI transmission line requiring minimal 230 kV transmission line tap construction
- The new station will be located on private land and the station will require approximately 10 acres of land.

Estimated costs are as follows:

Stations	$ 4,000,000
Controls	$ 430,000
Communications	$ 129,158
Transmission Line Tap	$ 250,000
Environmental	$ 10,500
Land Acquisition	$ 50,000
Subtotal	$ 4,869,658
Contingency at 20%	$ 973,932
Total	$ 5,845,000

Component 2: Improve Line Ratings for the MA and KM 115kV lines

Rating for the Gulf Minerals to Ambrosia "MA" 115kV line will be increased to 167 MVA (835 Amps). Rating for the West Mesa to Gulf Minerals "KM" 115kV line will be increased to 162 MVA (810 Amps). Line relays and switching equipment will be replaced as needed to support the new line ratings.

Right-of-way

The total length of both lines is about 75 miles. The MA line is about 14 miles and the KM line is a little less than 61 miles in length. Of this, approximately 30 miles of the line fall on Cibola National Forest, Navajo Nation, and Laguna Pueblo land. The remainder is on private land.

Major right-of-way issues on private lands are not anticipated. However, permitting on Federal lands may be a concern and is likely to require significant effort as addressed in the environmental section below.

Structure Work

The estimate is based on primarily using "phase raising" technology. "Phase raising" lifts the existing wood pole H-frame structures and improves ground clearances. With this added clearance, the existing conductor can operate at higher temperatures and carry additional load. A benefit to phase raising is the ability to work on the transmission line while it is energized.

Determination of number of spans to be raised is based on PNM's 1983 studies using older technology. From this analysis, approximately 250 spans need to be raised. It is estimated that 90% of the clearance improvements will be made using phase raising technology. On long spans, or structures which cannot be phase raised effectively, structures will be replaced or added. When the project becomes firm, more detailed clearance studies will be made and this may significantly affect the estimated cost of the transmission line work. Costs for clearance studies are included in the estimate.

Equipment Upgrades at Stations

Four sets of relays may need to be replaced or upgraded in order to accommodate the higher line ratings. For estimating purposes, complete replacements are assumed. In addition, four switches, located at Gulf Minerals, will need to be upgraded from their current 600 Amp rating.

Environmental

The KM and MA 115kV lines are pre-NEPA, pre-NHPA lines, which have never been inventoried for cultural and biological resources. An examination of transmission pads using PNM's line maintenance records (TAMIS data) indicates at least 20 cultural resources sites along the length of the line.

Because the terrain is fairly dissected, significant access road improvement sufficient to allow the passage of line construction trucks, , small cranes, and other construction equipment will likely be required. This could involve obtaining Clean Water Act coverage under a Section 404 Nationwide 14 permit issued by the Corps of Engineers and the development of a Stormwater Pollution Prevention Plan under Section 402.

Environmental Costs assume the following:

- A 404 permit from the Corps will require archaeological and biological inventory of the entire line
- The involvement of multiple agencies and entities including the Navajo Nation, the Bureau of Indian Affairs, the Cibola National Forest, the Corps of Engineers, the Environmental Protection Agency, and the Pueblo of Laguna will trigger an Environmental Assessment.
- Given the highly dissected nature of the terrain, the need to develop access, the use of heavy equipment, and the necessity to add poles, some restoration will be required.

A provision is also included for an environmental inspector during monitoring.

Estimated Costs for Component *2 are as follows:*

Transmission	$ 2,594,100
Stations	$ 41,000
Controls	$ 308,000
Environmental	$ 337,000
Land Acquisition	$ 51,000
Subtotal	$ 3,331,100
Contingency at 40%	$ 1,332,400
Total	$ 4,663,500

Component 3: Installation of new 230/115kV Autotransformer at West Mesa

The estimate addresses the addition of a third 230/115kV 200 MVA autotransformer installed in the 230kV yard portion of the West Mesa switchyard. The existing 230kV station is currently not configured to accommodate a third transformer effectively. Each transformer is terminated on the 230 kV line with it's own breaker. PNM will need to build a suitable bus configuration per PNM's breaker policy and will try to utilize as much of the existing facilities as possible. The transformer size has been assumed to be 200MVA, the same as the existing other two units.

The bus configuration estimate is based on a 230kV breaker and a half configuration with seven breakers and a new control house. The existing autotransformers may have to be relocated to accommodate the new bus configuration. Detailed engineering will be required to do determine the need for relocation. The estimate includes moving both units. Estimate is based on this being a turnkey project outsourced to an A/E firm.

Studies indicate the possibility that installation of this new transformer will significantly increase the fault current to approximately 38KA. This increased fault current can be mitigated with the installation of a 10-ohm series reactor and costs for the reactor are included.

Stations	$8,500,000
Controls plus the retirement of the WA line controls	$ 799,000

Series Reactor including removal of bus tie breaker	$ 700,000
Subtotal	$9,999,000
Contingency @ 20%	$1,999,800
Total	$11,998,800

Component 4: Miscellaneous Communications

PNM will need to do work at the La Mosca communications site in order to accommodate the new station in Component 1 and the expanded station work in Component 3. These costs are estimated as follows:

Communications Improvements	$ 89,493
20% contingency	$ 17,898
Total	$107,500

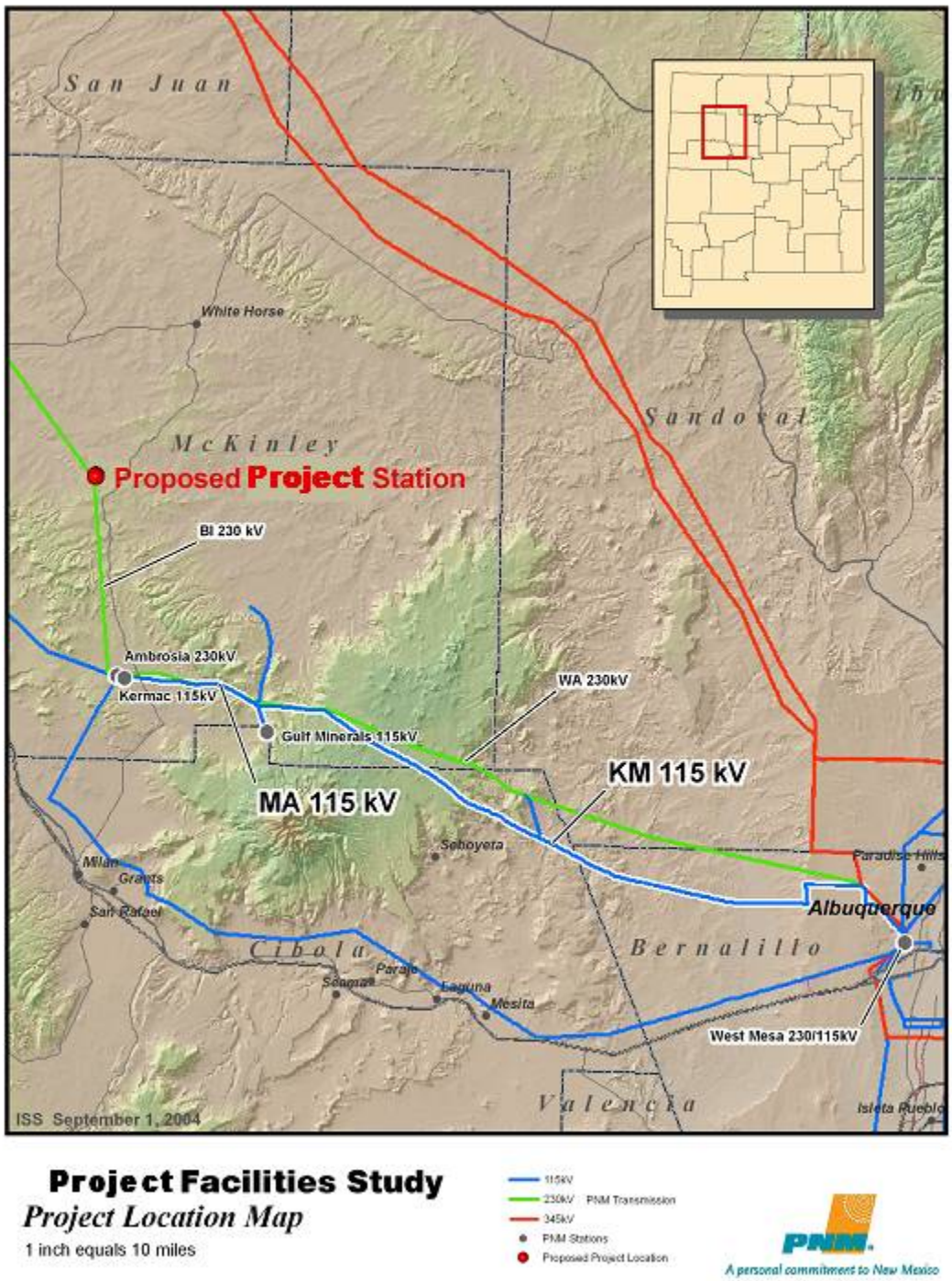

Exhibit 2 – Map showing the physical locations of the facilities

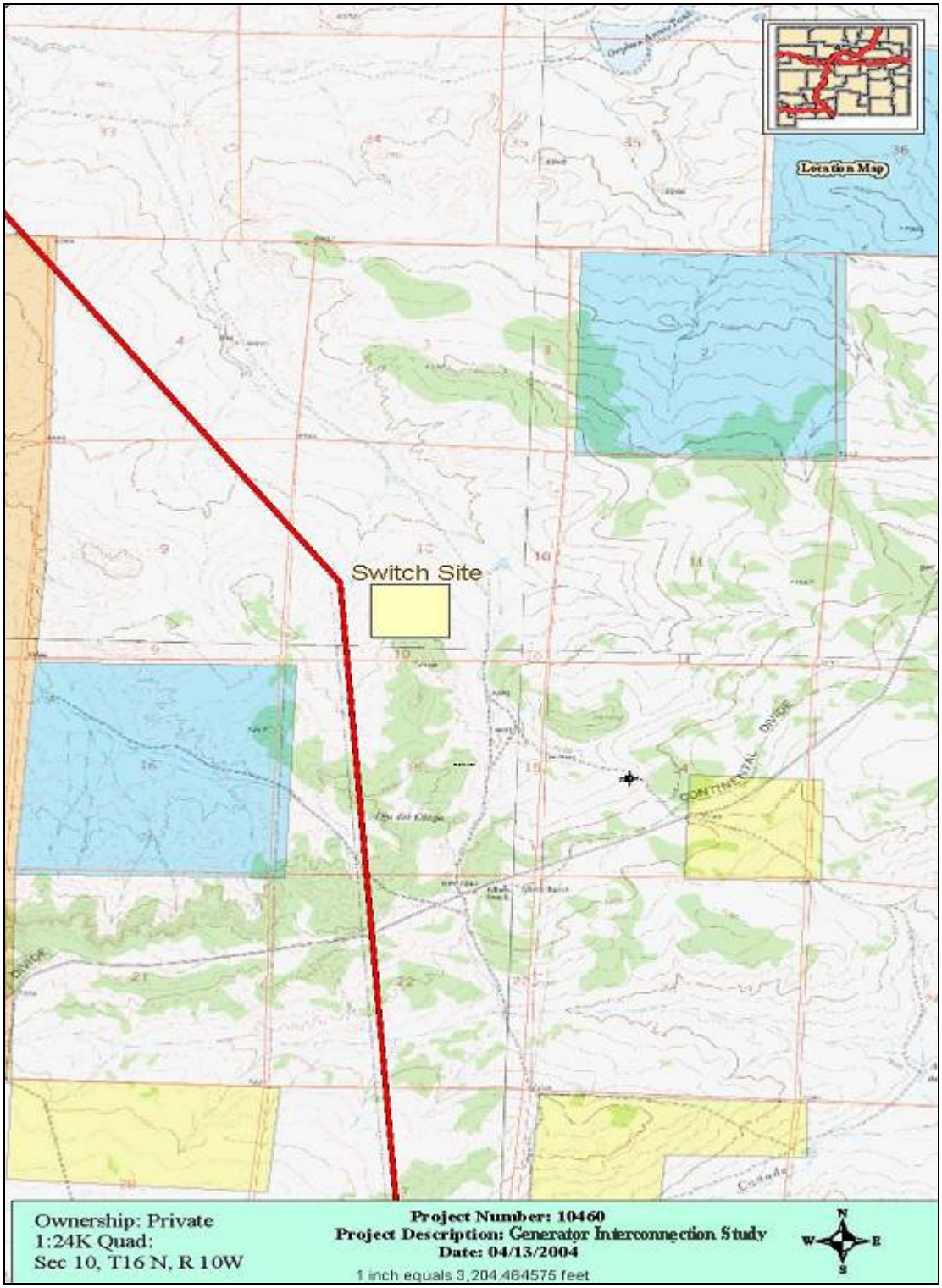

Exhibit 3 - Quadrangle map showing the approximate location of the proposed new three-breaker station on the BI 230 kV line

McKinley County 102 MW Wind Generation Interconnection Project

Interconnection System Impact Study

Final Report – May 2006

Prepared by:

Public Service Company of New Mexico

Electric Services
Transmission Operations

Foreword

This System Impact Study report was prepared for XXXXXXXX (XXXX) by Public Service Company of New Mexico (PNM) Transmission Operations, in response to an interconnection request perfected on December 12, 2003. The study was conducted in accordance with the Study Scope dated December 2, 2004.

Any correspondence concerning this document, including technical and commercial questions should be referred to:

Lead Director of Transmission Operations
Alvarado Square MS-0604
Albuquerque, NM 87158
Phone: (505) 241-4570
Fax: (505) 241-4363

Table of Contents

Executive Summary 1

1. Study Methodology and Criteria 3

2. Steady-State Analysis 6

3. Transient Stability Analysis 8

4. Fault Duty Analysis 9

Appendix A: List of Contingencies 11

Appendix B – Power Flow Diagrams 12

Appendix C: Transient Stability Study Results 17

Executive Summary

On December 12, 2003, XXXXXXXX (XXXX) perfected a request to interconnect a 102 MW wind generation facility (Project) to Public Service Company of New Mexico's (PNM) transmission system in McKinley County. The proposed Project would interconnect on the Gulf Minerals – West Mesa 115 kV (KM) line, approximately 10.5 miles west of the Marquez 115 kV tap. The Project consists of 68 General Electric 1.5 MW wind turbine generators. The proposed in-service date is May 2007.

A System Impact Study (SIS) was conducted by PNM to determine, on a preliminary basis, the system reinforcements required to safely and reliably interconnect the Project to the PNM system. The following is a summary of the reinforcements needed for the Project with respect to the different scenarios.

Table 1 – System upgrades required to mitigate transmission line overloads

Scenario	System Upgrades
With Mustang	1. Increase impedance of planned Bluewater – West Mesa 115 kV (BW) series reactor to maintain BW line flow below rating. 2. Remove ground clearance limitation on KM line by phase raising. 3. Install equipment to allow for dynamic rating of the KM line, unless the KM line can be up-rated to at least 165 MVA with a higher wind speed assumption based on the weather study that is currently underway.
Without Mustang	1. Install series reactor on BW line to maintain flow within rating, unless the BW line can be up-rated to at least 99 MVA with a higher wind speed assumption based on the weather study that is currently underway. 2. Install equipment to allow for dynamic rating of the KM line, unless the KM line can be up-rated to at least 137 MVA with a higher wind speed assumption based on a weather study that is currently underway.

PNM estimates that the weather study mention above is will be completed in late 2006. In addition to the system upgrades listed in Table 1, a three-breaker 115 kV ring bus is required at the location where the project interconnects with the KM line, as shown in Figure 1. A fourth breaker on the Project's side is required. The Project is required to comply with low voltage ride-through criteria, as well as off-nominal frequency requirements as applicable to generators.

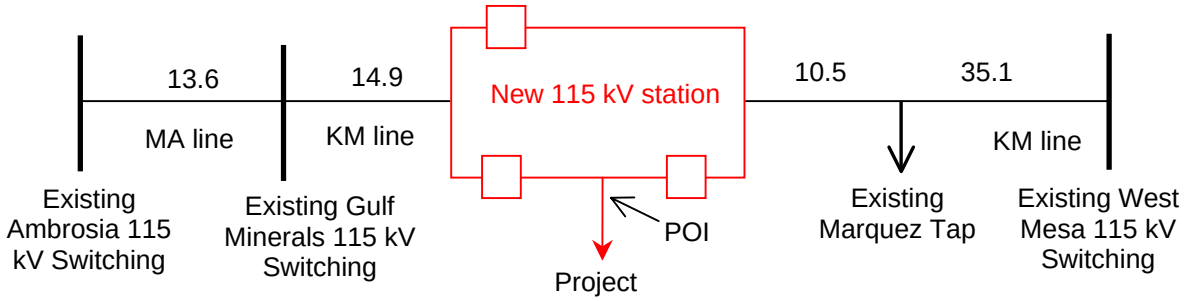

Figure 1 - Interconnection facilities required to accommodate the Project

The SIS did not identify voltage level or voltage raise/drop criteria violations under normal or contingency operating conditions. The transient stability study (see Section 3) indicates that performance with the Project in service is acceptable for all study scenarios. The fault duty study (see Section 4) did not identify any impact to transmission breakers.

The final design and cost estimates of the system reinforcements required for interconnection will be determined in a separate Interconnection Facilities Study, should XXXX decide to further pursue this Project. This study does not determine PNM's ability to provide transmission delivery service of the Project output.

1. Study Methodology and Criteria

1.1 – Project Modeling

The Project was represented in the power flow model as shown in Figure 1. An equivalent generator, pad-mounted transformer and collector system were modeled. The power flow parameters are listed below.

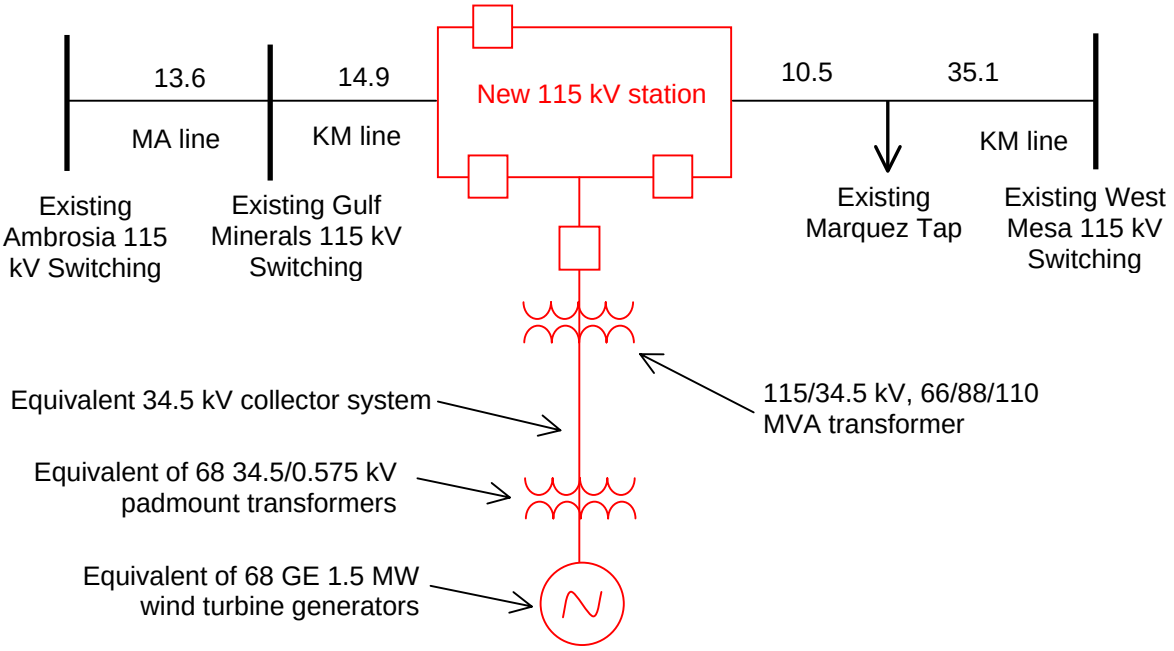

Figure 2 – Power flow representation of the Project.

Generator Data

Nameplate rating:	119 MVA, 102 MW (68 turbines rated 1.75 MVA, 1.5 MW)
Reactive capability:	Continuous reactive power control, 0.9 lag to 0.95 lead.
Terminal Voltage:	0.575 kV at the wind turbine generator terminals

115/34.5 kV Generator Step-Up Transformer

Rating:	66/88/110 MVA
Impedance	Z = 9% (66 MVA base). R = 0.0038, X = 0.1364 on 100 MVA base
Taps	De-energized tap changer, 2-2 1/2% above and below 34.5 kV

34.5/0.575 kV Padmount Transformer

Rating	102 MW total rating (1.8 MVA x 68 units)
Impedance	Z = 5.75% each unit (1.8 MVA base)
	Assume R = 0.0064, X = 0.0482 pu on 100MVA base (68 parallel units)

34.5 kV collector system equivalent

Impedance	Assume R = 0.008, X = 0.015, B = 0.03 pu on 100 MVA base[1]

[1] Equivalent collector system impedances are estimates based on data provided by XXXX and parameters used in existing New Mexico Wind Energy Center equivalent model.

Transient stability simulations were conducted with Version 14.2 of the GE PSLF program. The models used are documented in the Study Scope.

1.2 - Study Methodology

The basic study approach was to test the system performance with and without the proposed Project. For study purposes, the forecast loading and transmission configuration for the peak 2007 summer season. The base cases were generated from the WECC 2007 base case. In addition to the Project, the following projects that hold senior positions in PNM's interconnection queue were added.

- Proposed Mustang 300 MW coal-fired project in McKinley County [2]
- Proposed Argonne Mesa 200 MW wind project in Guadalupe County [3]

The Argonne Mesa project, as well as the existing 200 MW New Mexico Wind Energy Center (NMWEC) and 200 MW Blackwater HVDC converter station, are interconnected to PNM's 345 kV transmission system east of the B-A Switching Station. An initial analysis indicated that high injections on this part of the system tend to mask the impact of the Project. The study was conducted with the Project at full output (102 MW), the HVDC dispatched at 50 MW and wind generation in eastern New Mexico totaling 15 MW. This is consistent with the methodology used in the System Impact Study for the Mustang project. Wind production from the Project cannot be assumed to be the same as wind production from Argonne Mesa and NMWEC in Eastern New Mexico due to the significant distance (200 miles). Periods of very low wind speed are common during the summer season. High wind production does occur, and tends to be driven primarily by localized storm events. The specific scenarios that were evaluated for the Project are listed below. Generation added to the base case was displaced at San Juan.

Table 2 – Study scenarios evaluated

Scenario	Description
2a	Benchmark case without the Project. Proposed Mustang 300 MW project at full output; existing PEGS generating station at 220 MW; Reeves 1 and Reeves 2 at minimum generation; existing Blackwater HVDC at 50 MW West. Existing wind resources in eastern New Mexico at 15 MW; Arroyo phase shifter at 200 MW south.
2b	Scenario 2a with the Project at full output (102 MW)
3a	Scenario 2a without Mustang and without the Project.
3b	Scenario 3a with the Project at full output (102 MW)

In each base case, power flow and dynamic stability analyses were performed for the N-1 and N-2 contingencies listed in Appendix A. Sensitivity studies were conducted with the Rio Puerco switching station in service. Appendix B contains power flow diagrams for each study scenario.

1.3 – Study Criteria

PNM adheres to the following NERC/WECC Planning Standards[4] with a few exceptions as noted below. The applicable WECC reliability planning criteria is summarized below.

[2] Mustang 300 MW Interconnection System Impact and Facilities Study, Final Report – October 2003. Proposed ISD is May 2009.

[3] Argonne Mesa 200 MW Interconnection System Impact and Facilities Study, Final Report – May 2004. Proposed ISD is Sep. 2006.

- Changes in bus voltages from pre- to post-contingency must be less than 5% for N-1 outages.
- All equipment loadings must be below their normal ratings under normal conditions.
- All equipment loadings must be below their emergency ratings for outage conditions.
- The transient stability criteria require that all machines remain in synchronism, all voltage swings should be damped, and voltage/frequency performance must meet the following performance criteria. Following fault clearing for single contingencies, voltage on load buses may not dip more than 25% of the pre-fault voltage or dip more than 20% of the pre-fault voltage for more than 20 cycles. For double contingencies (i.e., breaker failures), voltage on load buses may not
  dip more than 30% of the pre-fault voltage or dip more than 20% of the pre-fault voltage for more than 40 cycles.

PNM's additions and exceptions to WECC criteria are stated below:

- For bus voltage levels between 1 kV and 345 kV, the minimum and maximum range are 0.95 p.u. and 1.05 p.u., respectively, for N-1 contingencies. For N-2 and breaker failures the minimum voltage level is 0.90 p.u.
- Changes in bus voltages from pre- to post-contingency must be less than 8% with the exception of the Deming area, which is held to the El Paso Electric Company's criterion of 7% voltage drop for N-1 outages. PNM allows voltage drops no greater than a 10% for N-2 and breaker failures outages.
- The maximum steady state voltage and transient swing voltages for the Blackwater-BA 345 kV line are 1.1 p.u. and 1.2 p.u., respectively. However, the steady state voltage level at the BA 345 kV bus and Blackwater 345 kV bus must not exceed 1.05 p.u.

Tri-State additional criteria for contingencies are listed below:

- The minimum and maximum bus voltages for normal operation are 0.95 p.u. to 1.05 p.u., respectively.
- The minimum and maximum bus voltages for outage conditions are 0.90 p.u. to 1.10 p.u., respectively.
- Changes in bus voltages from pre- to post-contingency must be less than 6% for Tri-State buses served from the PNM system. For Tri-State buses served from the Tri-State system, no voltage change criterion shall apply.

[4] NERC/WECC Planning Standards, August 2001, accessible from www.wecc.biz.

2. Steady-State Analysis

Table 3 shows transmission facility overloads for N-1 and N-2 contingencies. Scenario 1 is not shown in the table because it does not represent worst-case conditions. There were no overloads with all lines in service.

Table 3 - *Outage Condition Overloads*

Contingency	Monitored Element	Line	Seg. Miles	Rating	With Mustang *		Without Mustang	
					2a	2b	3a	3b
AMBROSIA-WESTMESA 230 (see note below)	BLUEWATR-GRANTS_T 115	BW	11.7	90 MVA	1.097	1.142	1.037	1.097
	LAGUNA-GRANTS_T 115	BW	11.7	90 MVA	0.963	1.007	0.902	0.959
	MARQUEZT-WESTMS_1 115	KM	35.1	131 MVA		1.196		0.978
	PROJECT-MARQUEZT 115	KM	10.5	131 MVA	0.911	1.256		1.038
FOURCORN-WESTMESA 345	BLUEWATR-GRANTS_T 115	BW	11.7	90 MVA	1.081	1.087	0.973	0.993
	PROJECT-MARQUEZT 115	KM	10.5	131 MVA		1.026		0.949
SAN JUAN-BA 345	BLUEWATR-GRANTS_T 115	BW	11.7	90 MVA	1.02	1.045	0.91	0.934
BA TRANS-BA-SAN_JUAN 345 (N-2)	BLUEWATR-GRANTS_T 115	BW	11.7	90 MVA	1.041	1.067	0.935	0.959
	PROJECT-MARQUEZT 115	KM	10.5	131 MVA		1.016		0.928
FOUR-CORNERS-WESTMESA SAN_JUAN-BA 345 (N-2)	BLUEWATR-GRANTS_T 115	BW	11.7	90 MVA	1.056	1.079	DV	0.973
	PROJECT-MARQUEZT 115	KM	10.5	131 MVA		1.024	DV	0.938

(*) BW line series reactor inserted after the Ambrosia – West Mesa 230 kV line contingency for the scenarios that included the Mustang Project

3.1 Overloads prior to the addition of the Project

Note that for scenario 2a (with Mustang in service), a section of the BW 115 kV line overloads. The overload is most severe after the outage of the Ambrosia – West Mesa (WA) 230 kV line. Table 2 also shows that, without Mustang (Scenario 3a), the BW line overloads by approximately 4% for the WA line outage. The existing BW line rating is 90 MVA, limited by conductor temperature. PNM is currently conducting a weather study to determine if it is possible to rely on a higher wind speed assumption and increase the BW line rating. For instance, using 4 ft/sec instead of 2 ft/sec may increase the line rating by approximately 10%. Based on PNM's previous experience, adjustments from 0 to 15% are possible based on the weather study results. PNM anticipates that the weather study will be completed in late 2006.

As part of the Mustang 300 MW project, PNM identified the need to install a series reactor on the BW line to address this overload, since the BW line overload would be well in excess of 20%. Therefore, with Mustang in service (Scenarios 2a and 2b), a series reactor was switched in following a WA line outage. The impedance of the series reactor will depend on the BW line rating. For study purposes, PNM selected a series reactor impedance was selected such that the flow on the BW line is limited to approximately 10% of the existing line rating. The required impedance of the series reactor will be adjusted depending on what BW line rating the weather study actually supports.

3.2 - Mitigation BW line overloads

With the Project in service, the flow on the BW line increases by approximately 5% (4.5 MVA) following the WA line outage. In scenario 2a (with Mustang), the overload is 14.2% above the present BW line rating, assuming that the series reactor described in the previous section is

inserted. To address this overload, the impedance of the BW series reactor can be increased to reduce the contingency line flow to maintain acceptable line loading. As discussed above, the line rating will ultimately depend on the results of the weather study.

Without Mustang, the BW line series reactor would be required if the weather study does not support an increase in line rating of 10% or higher.

3.3 - Mitigation KM line overloads

The addition of the Project also overloads the KM 115 kV line, which has an existing rating of 131 MVA due to ground clearance limitations. With Mustang in service, the WA outage overloads the KM line section adjacent to the Project (Project - Marquez Tap) by 26%, or 34 MVA above the existing rating. The overload on the line section from Marquez Tap to West Mesa is approximately 20%, or 25.7 MVA above the existing rating. It should be noted that the magnitude of these overloads will increase if the impedance of the BW series reactor is increased as discussed in the previous section.

To accommodate the Project, PNM will require that ground clearance limits on the KM line be removed by phase raising. This would increase the rating to 154 MVA, the conductor temperature limit. Note, however, that this rating would insufficient to accommodate the 165 MVA flow with the full output of the Project. As part of the weather study discussed previously, PNM intends to evaluate the feasibility of increasing the KM line rating beyond 154 MVA based on a higher wind speed assumption. If the results are favorable, phase raising may be sufficient to accommodate the full output of the Project. Alternatively, if the weather study does not support a higher KM line rating, PNM may require that weather monitoring and communications equipment be installed to allow for dynamic rating of the KM line. This alternative is appropriate because the Project is wind-driven, and the line overloads are in close proximity to the Project.

Without Mustang, KM line overloads by approximately 4% following a WA line outage. In this scenario, it may be possible to accommodate the Project without any line upgrades if the results of the weather study are favorable. Otherwise, phase raising will be required.

Table 4 summarizes the system reinforcements required to address facility overloads with the Project at full output.

Table 4 – System reinforcements to address transmission overloads

Scenario	System Upgrades
With Mustang	1. Increase impedance of planned BW series reactor to maintain BW line flow below rating. 2. Remove ground clearance limitation on KM line by phase raising. 3. Install equipment to allow for dynamic rating of the KM line, unless the KM line can be up-rated to at least 165 MVA with a higher wind speed assumption based on the weather study.
Without Mustang	1. Install series reactor on BW line to maintain flow within rating, unless the BW line can be up-rated to at least 99 MVA with a higher wind speed assumption based on the weather study. 2. Install equipment to allow for dynamic rating of the KM line, unless the KM line can be up-rated to at least 137 MVA with a higher wind speed assumption based on the weather study.

Sensitivity studies with Rio Puerco in service do not change the results discussed above.

3. Transient Stability Analysis

Transient stability simulations were conducted for the contingencies listed in Appendix A. Both normally cleared three-phase faults with (N-1 contingency) and single-phase faults with breaker failure (N-2 contingency with delayed clearing) were simulated. For the purposes of transient stability simulations, normally-cleared fault time was assumed to be 4 cycles.

The simulations show that the addition of the Project would not adversely affect system transient stability performance. Note that simulations with injections on the 345 kV line East of B-A were not included due to modeling uncertainties at very high injections on the transmission system east of the B-A switching Station[5]. Screening studies did show that the Project does not degrade transient stability performance in that scenario. In addition, sensitivity studies with Rio Puerco in service support the same results discussed above.

Appendix C contains a set of relevant dynamic stability plots for the worst-case contingencies. Additional simulation plots can be provided upon request.

PNM will require that the Project comply with Low voltage ride-through (LVRT) pursuant to Appendix G of the LGIA. In this particular case, the Project is expected to ride through a 115 kV three-phase fault, cleared in normal time (up to 9 cycles) by tripping either Project – West Mesa, or Project – Gulf Minerals, which results in a fault voltage as low as 0.15 pu at the Point of Interconnection (Project Station). The Project is also required to ride through single-line-to-ground faults with delayed clearing. For the PNM system, delayed clearing also takes place within 9 cycles.

The Project is also expected to comply with WECC off-nominal frequency requirements. Table 4-1 below summarizes this requirement.

Table 4-1 – WECC Off-Nominal Frequency for Generators

Under-frequency Limit	Over-frequency Limit	WECC Minimum Time
> 59.4 Hz	60 Hz to < 60.6 Hz	N/A (continuous operation)
≤ 59.4 Hz	≥60.6 Hz	3 minutes
≤ 58.4 Hz	≥61.6 Hz	30 seconds
≤ 57.8 Hz		7.5 seconds
≤ 57.3 Hz		45 cycles
≤ 57 Hz	>61.7 Hz	Instantaneous trip

[5] The bulk power system east of the BA 345 kV station consists of a radial 223-mile 345 kV transmission line terminated at the 200 MW Blackwater HVDC station. Maximum injections with the existing New Mexico Wind Energy Center and proposed 200 MW Argonne Mesa wind project would be 600 MW.

4. Fault Duty Analysis

The results of the fault duty analysis are tabulated below. Based on the results, replacement of existing breakers is not required.

4.1 – Three-phase fault on McKinley 115 kV

```
*****************************************************************************************************
  1. Bus Fault on:          0     McKinley 115. kV 3LG
                                                    FAULT CURRENT (PU @ DEG)
                 + SEQ              - SEQ              0 SEQ            A PHASE            B PHASE            C PHAS
              12.116@ -79.7       0.000@   0.0       0.000@   0.0      12.116@ -79.7      12.116@ 160.3      12.116@
                                                    THEVENIN IMPEDANCE (PU)
            0.0147+j0.08121    0.0147+j0.08121   0.00646+j0.04235

                 SHORT CIRCUIT MVA= 1211.6          X/R RATIO= 5.52349      R0/X1= 0.07952     X0/X1= 0.52141
-----------------------------------------------------------------------------------------------------
BUS      0     McKinley   115.KV  AREA   1  ZONE   1   TIER   0       (PREFAULT V=1.000@   0.0 PU)
                                    + SEQ              - SEQ              0 SEQ            A PHASE            B PHASE
VOLTAGE (PU)                >      0.000@   0.0       0.000@   0.0      0.000@   0.0      0.000@   0.0      0.000@   0.0
BRANCH CURRENT (PU) TO      >
     0   Gen        34.5  1T      4.628@  96.7       0.000@   0.0      0.000@   0.0      4.628@  96.7      4.628@ -23.3
    29 GULF MINERAL  115.  1L      4.273@ 101.9       0.000@   0.0      0.000@   0.0      4.273@ 101.9      4.273@ -18.1
    71 WEST MESA 1   115.  1L      3.230@ 103.3       0.000@   0.0      0.000@   0.0      3.230@ 103.3      3.230@ -16.7

CURRENT TO FAULT (PU)       >     12.116@ -79.7       0.000@   0.0      0.000@   0.0     12.116@ -79.7     12.116@ 160.3     1
THEVENIN IMPEDANCE (PU)     >    0.08253@  79.7    0.08253@  79.7   0.04284@  81.3
-----------------------------------------------------------------------------------------------------
BUS      0      Gen        34.5KV  AREA   1  ZONE   1   TIER   0       (PREFAULT V=1.000@   0.0 PU)
                                    + SEQ              - SEQ              0 SEQ            A PHASE            B PHASE
VOLTAGE (PU)                >      0.505@  49.6       0.000@   0.0      0.000@   0.0      0.505@  49.6      0.505@ -70.4
BRANCH CURRENT (PU) TO      >
     0 Wind Bus       34.5  1L      4.628@  66.7       0.000@   0.0      0.000@   0.0      4.628@  66.7      4.628@ -53.3
     0     McKinley   115.  1T      4.628@-113.3       0.000@   0.0      0.000@   0.0      4.628@-113.3      4.628@ 126.7
-----------------------------------------------------------------------------------------------------
BUS     29 GULF MINERAL   115.KV  AREA   1  ZONE   1   TIER   0       (PREFAULT V=1.000@   0.0 PU)
                                    + SEQ              - SEQ              0 SEQ            A PHASE            B PHASE
VOLTAGE (PU)                >      0.360@  -2.2       0.000@   0.0      0.000@   0.0      0.360@  -2.2      0.360@-122.2
BRANCH CURRENT (PU) TO      >
     4 AMBROSIA       115.  1L      4.273@ 101.9       0.000@   0.0      0.000@   0.0      4.273@ 101.9      4.273@ -18.1
     0     McKinley   115.  1L      4.273@ -78.1       0.000@   0.0      0.000@   0.0      4.273@ -78.1      4.273@ 161.9
-----------------------------------------------------------------------------------------------------
BUS     71 WEST MESA 1    115.KV  AREA   1  ZONE   1   TIER   0       (PREFAULT V=1.000@   0.0 PU)
                                    + SEQ              - SEQ              0 SEQ            A PHASE            B PHASE
VOLTAGE (PU)                >      0.905@  -0.8       0.000@   0.0      0.000@   0.0      0.905@  -0.8      0.905@-120.8
BRANCH CURRENT (PU) TO      >
     0 IRVING         115.   L      0.389@ 106.1       0.000@   0.0      0.000@   0.0      0.389@ 106.1      0.389@ -13.9
     0 WEST MESA 2    115.  1L      1.703@ 102.7       0.000@   0.0      0.000@   0.0      1.703@ 102.7      1.703@ -17.3
     0 PGT W MESA     115.  1L      0.164@  97.3       0.000@   0.0      0.000@   0.0      0.164@  97.3      0.164@ -22.7
    46 PERSON         115.  1L      0.259@ 104.0       0.000@   0.0      0.000@   0.0      0.259@ 104.0      0.259@ -16.0
     0     McKinley   115.  1L      3.231@ -76.7       0.000@   0.0      0.000@   0.0      3.231@ -76.7      3.231@ 163.3
   158 XFMR WMESA3     13.8  1T      1.012@ 102.3       0.000@   0.0      0.000@   0.0      1.012@ 102.3      1.012@ -17.7
   166 XF WEST MESA    13.8  1T      0.296@ -82.0       0.000@   0.0      0.000@   0.0      0.296@ -82.0      0.296@ 158.0
-----------------------------------------------------------------------------------------------------
BUS      0 Wind Bus        34.5KV  AREA   1  ZONE   1   TIER   0       (PREFAULT V=1.000@   0.0 PU)
                                    + SEQ              - SEQ              0 SEQ            A PHASE            B PHASE
VOLTAGE (PU)                >      0.503@  31.9       0.000@   0.0      0.000@   0.0      0.503@  31.9      0.503@ -88.1

SHUNT CURRENTS (PU)         >
  FROM GENERATOR                   4.628@-113.3       0.000@   0.0      0.000@   0.0      4.628@-113.3      4.628@ 126.7
      UNIT  1                      4.628@-113.3       0.000@   0.0      0.000@   0.0      4.628@-113.3      4.628@ 126.7
BRANCH CURRENT (PU) TO      >
     0      Gen        34.5  1L      4.628@-113.3       0.000@   0.0      0.000@   0.0      4.628@-113.3      4.628@ 126.7
-----------------------------------------------------------------------------------------------------
```

4.2 – Single-line-to-ground fault at McKinley 115 kV

```
==========================================================================================
  2. Bus Fault on:          0    McKinley 115. kV 1LG Type=A
                                                  FAULT CURRENT (PU @ DEG)
                  + SEQ              - SEQ              0 SEQ              A PHASE              B PHASE              C PHA
                4.810@ -80.1       4.810@ -80.1       4.810@ -80.1       14.431@ -80.1        0.000@   0.0        0.000@
                                                  THEVENIN IMPEDANCE (PU)
             0.0147+j0.08121    0.0147+j0.08121    0.00646+j0.04235

                 SHORT CIRCUIT MVA= 1443.1          X/R RATIO= 5.70929      R0/X1= 0.07952     X0/X1= 0.52141
------------------------------------------------------------------------------------------
BUS      0     McKinley    115.KV  AREA   1  ZONE   1   TIER   0       (PREFAULT V=1.000@   0.0 PU)
                                      + SEQ              - SEQ              0 SEQ              A PHASE              B PHASE
VOLTAGE (PU)                  >      0.603@   0.2       0.397@ 179.7      0.206@-178.7       0.000@   0.0       0.926@-109.5
BRANCH CURRENT (PU) TO        >
     0    Gen          34.5  1T      1.837@  96.4       1.837@  96.4      4.238@  98.8       7.911@  97.7       2.404@ 100.7
    29 GULF MINERAL    115.  1L      1.696@ 101.5       1.696@ 101.5      0.345@ 107.7       3.736@ 102.1       1.354@ -80.0
    71 WEST MESA 1     115.  1L      1.283@ 102.9       1.283@ 102.9      0.234@ 108.6       2.799@ 103.4       1.050@ -78.3

CURRENT TO FAULT (PU)         >      4.810@ -80.1       4.810@ -80.1      4.810@ -80.1      14.431@ -80.1       0.000@   0.0
THEVENIN IMPEDANCE (PU)       >    0.08253@  79.7     0.08253@  79.7    0.04264@  81.3
------------------------------------------------------------------------------------------
BUS      0     Gen         34.5KV  AREA   1  ZONE   1   TIER   0       (PREFAULT V=1.000@   0.0 PU)
                                      + SEQ              - SEQ              0 SEQ              A PHASE              B PHASE
VOLTAGE (PU)                  >      0.750@  11.9       0.308@-150.1      0.000@   0.0       0.467@   0.1       0.867@ -87.8
BRANCH CURRENT (PU) TO        >
     0 Wind Bus         34.5  1L      1.837@  66.4       1.837@ 126.4      0.000@   0.0       3.182@  96.4       3.182@ -83.6
     0    McKinley     115.  1T      1.837@-113.6       1.837@ -53.6      0.000@   0.0       3.182@ -83.6       3.182@  96.4
------------------------------------------------------------------------------------------
BUS     29 GULF MINERAL    115.KV  AREA   1  ZONE   1   TIER   0       (PREFAULT V=1.000@   0.0 PU)
                                      + SEQ              - SEQ              0 SEQ              A PHASE              B PHASE
VOLTAGE (PU)                  >      0.746@  -0.3       0.254@-179.1      0.116@-177.9       0.376@  -1.9       0.939@-112.7
BRANCH CURRENT (PU) TO        >
     4 AMBROSIA         115.  1L      1.697@ 101.5       1.697@ 101.5      0.345@ 107.7       3.736@ 102.1       1.354@ -80.0
     0    McKinley     115.  1L      1.697@ -78.5       1.697@ -78.5      0.345@ -72.3       3.736@ -77.9       1.354@ 100.0
------------------------------------------------------------------------------------------
BUS     71 WEST MESA 1     115.KV  AREA   1  ZONE   1   TIER   0       (PREFAULT V=1.000@   0.0 PU)
                                      + SEQ              - SEQ              0 SEQ              A PHASE              B PHASE
VOLTAGE (PU)                  >      0.962@  -0.3       0.038@-172.4      0.002@-164.6       0.923@  -0.7       0.979@-118.3
BRANCH CURRENT (PU) TO        >
     0 IRVING           115.   L      0.155@ 105.7       0.154@ 105.7      0.009@ 120.9       0.318@ 106.1       0.146@ -75.1
     0 WEST MESA 2      115.  1L      0.676@ 102.4       0.676@ 102.4      0.183@ 107.7       1.535@ 103.0       0.494@ -79.6
     0 PGT W MESA       115.  1L      0.065@  97.0       0.065@  97.1      0.004@ -63.0       0.127@  97.1       0.069@ -83.2
    46 PERSON           115.  1L      0.103@ 103.7       0.104@ 103.7      0.006@ 118.2       0.213@ 104.1       0.097@ -77.8
     0    McKinley     115.  1L      1.283@ -77.1       1.283@ -77.1      0.234@ -71.4       2.799@ -76.6       1.050@ 101.7
   158 XFMR WMESA3     13.8  1T      0.402@ 102.0       0.401@ 102.0      0.032@ 110.2       0.834@ 102.3       0.370@ -78.6
   166 XF WEST MESA    13.8  1T      0.118@ -82.3       0.118@ -82.3      0.008@  95.7       0.227@ -82.2       0.126@  97.5
------------------------------------------------------------------------------------------
BUS      0 Wind Bus         34.5KV  AREA   1  ZONE   1   TIER   0       (PREFAULT V=1.000@   0.0 PU)
                                      + SEQ              - SEQ              0 SEQ              A PHASE              B PHASE
VOLTAGE (PU)                  >      0.781@   7.9       0.251@-145.2      0.000@   0.0       0.568@  -3.6       0.833@ -94.6

SHUNT CURRENTS (PU)           >
  FROM GENERATOR                     1.837@-113.6       1.837@ -53.6      0.000@   0.0       3.182@ -83.6       3.182@  96.4
       UNIT  1                       1.837@-113.6       1.837@ -53.6      0.000@   0.0       3.182@ -83.6       3.182@  96.4
BRANCH CURRENT (PU) TO        >
     0    Gen          34.5  1L      1.837@-113.6       1.837@ -53.6      0.000@   0.0       3.182@ -83.6       3.182@  96.4
------------------------------------------------------------------------------------------
```

Appendix A: List of Contingencies

N-1 Contingencies	2a	2b	3a	3b	2ar	2br	3ar	3br
San Juan – BA 345 kV	✓	✓	✓	✓				
Four Corners – West Mesa 345 kV	✓	✓	✓	✓				
San Juan – Rio Puerco 345 kV					✓	✓	✓	✓
Four Corners – Rio Puerco 345 kV					✓	✓	✓	✓
Rio Puerco – BA 345 kV					✓	✓	✓	✓
BA – Norton 345 kV	✓	✓	✓	✓	✓	✓	✓	✓
San Juan – Ojo 345 kV	✓	✓	✓	✓	✓	✓	✓	✓
West Mesa – Arroyo 345 kV	✓	✓	✓	✓	✓	✓	✓	✓
West Mesa – Project 115 kV		✓		✓		✓		✓
Project – Ambrosia 115 kV		✓		✓		✓		✓
West Mesa – Ambrosia 230 kV	✓	✓	✓	✓	✓	✓	✓	✓
Mustang – Bisti 230 kV	✓	✓			✓	✓		
Four Corners – Bisti 230 kV	✓	✓	✓	✓	✓	✓	✓	✓
Ambrosia 230/115 kV transformer	✓	✓	✓	✓	✓	✓	✓	✓
BA – Guadalupe 345 kV	✓	✓	✓	✓	✓	✓	✓	✓
BA 345/115 kV transformer	✓	✓	✓	✓	✓	✓	✓	✓
Norton 345/115 kV transformer	✓	✓	✓	✓	✓	✓	✓	✓
Ojo 345/115 kV transformer	✓	✓	✓	✓	✓	✓	✓	✓
Sandia 345/115 kV transformer	✓	✓	✓	✓	✓	✓	✓	✓
West Mesa 345/115 kV transformer 1	✓	✓	✓	✓	✓	✓	✓	✓
N-2 Contingencies								
BB line & BA – Norton 345 kV line	✓	✓	✓	✓	✓	✓	✓	✓
BA – San Juan and BA- West Mesa 345 kV lines	✓	✓	✓	✓				
Both Rio Puerco – BA 345 kV lines					✓	✓	✓	✓
Breaker Failure Contingencies								
BA – West Mesa & BB line 345 kV	✓	✓	✓	✓				
BA – West Mesa & BA 345/115 kV xfm			✓	✓				
BA – Rio Puerco & BB line 345 kV					✓	✓	✓	✓
BA – Rio Puerco & BA 345/115 kV xfm					✓	✓	✓	✓

Appendix B – Power Flow Diagrams

Scenario	Figure
1a	B1
1b	B2
2a	B3
2b	B4

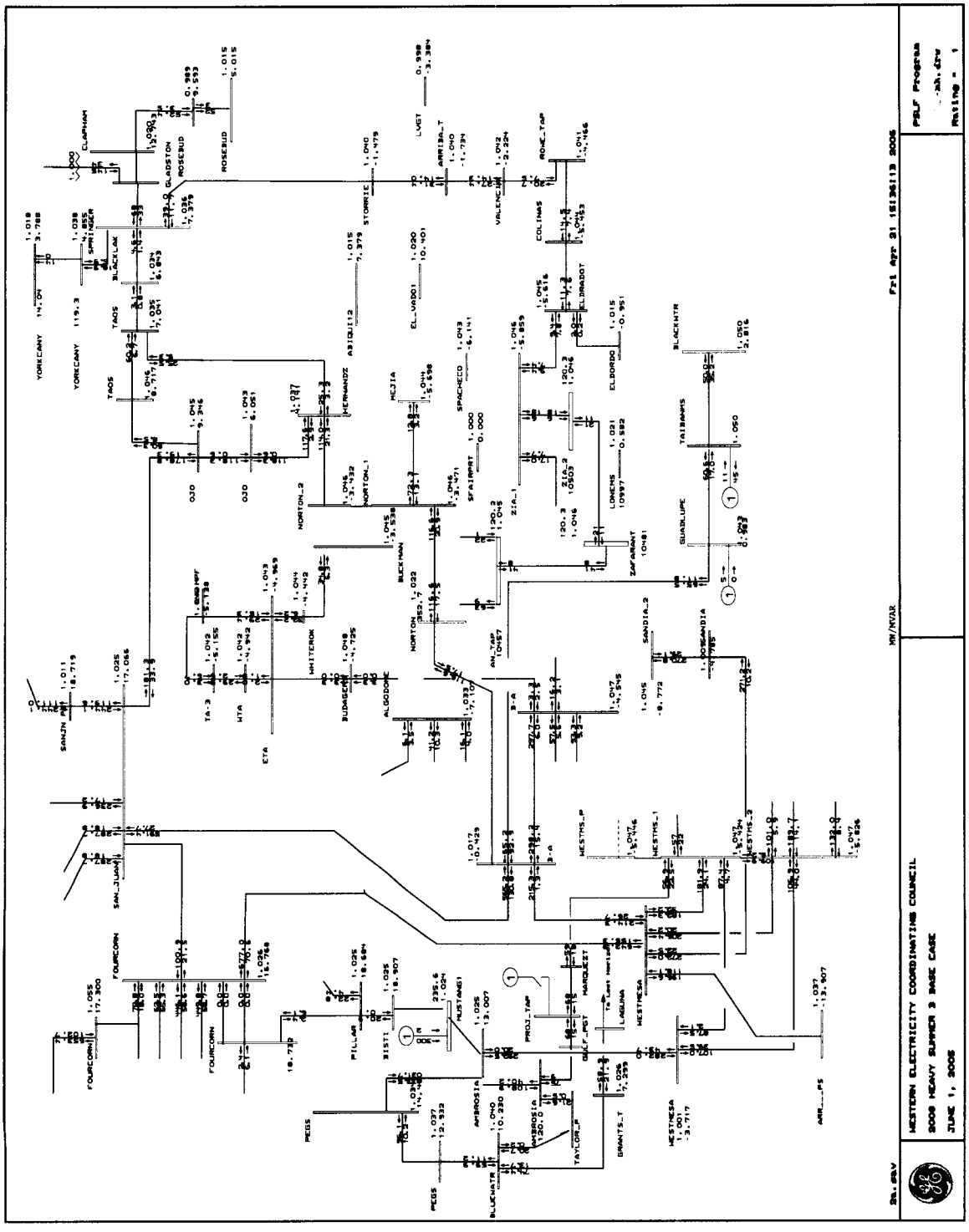

Figure B-1 – Scenario 2a: With Mustang, Without Project

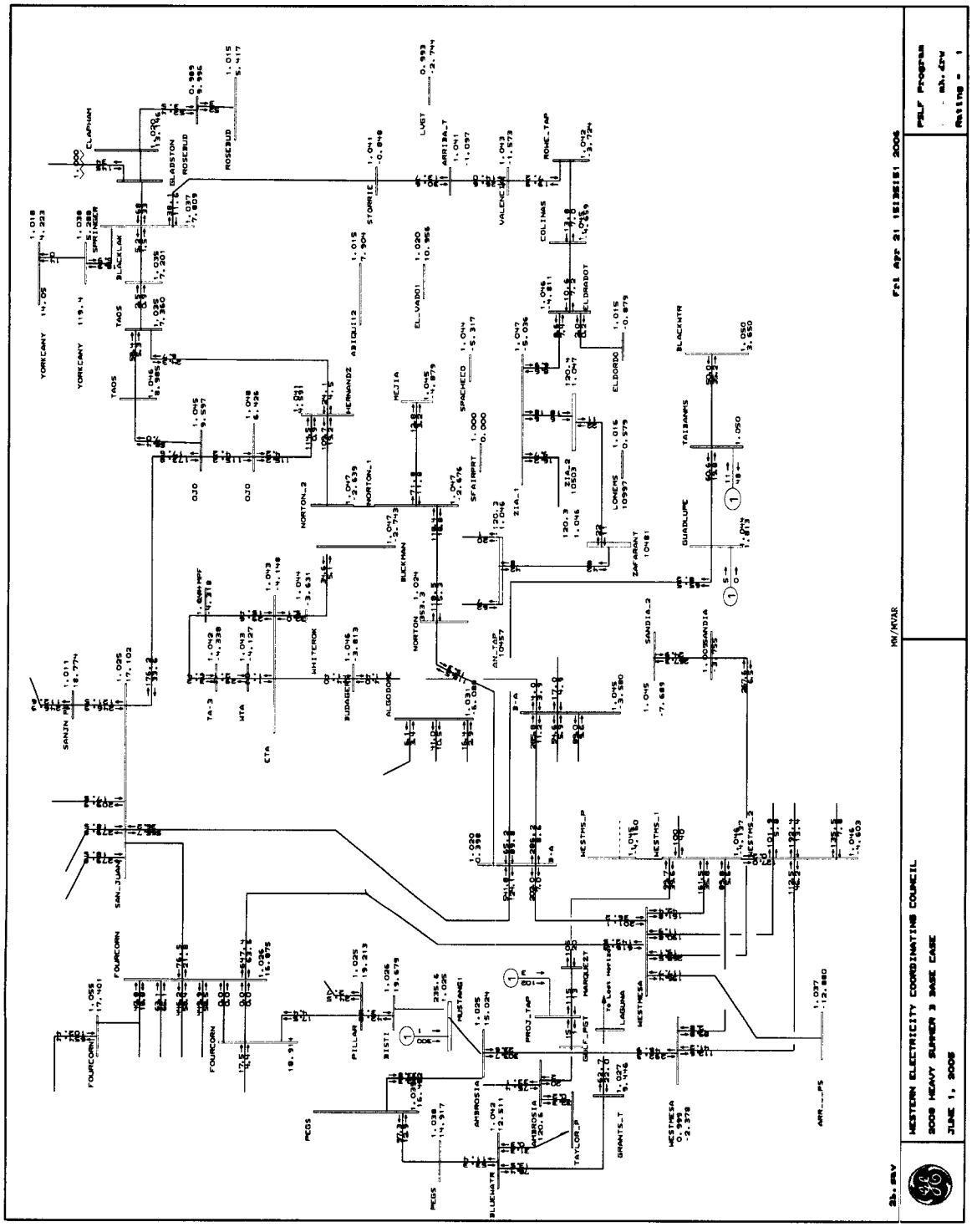

Figure B-2 – Scenario 2a: With Mustang, With Project

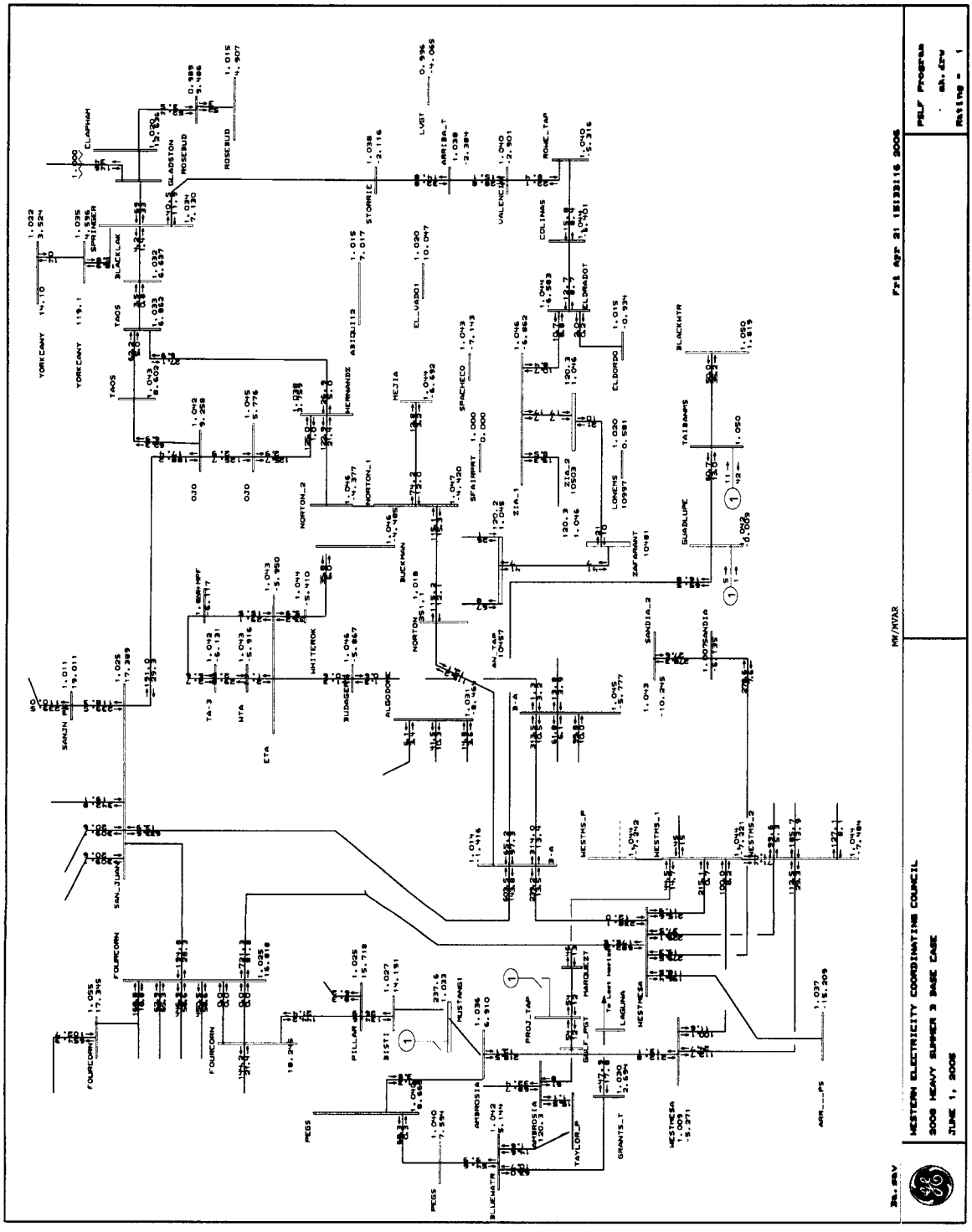

Figure B-3 – Scenario 2a: Without Mustang, Without Project

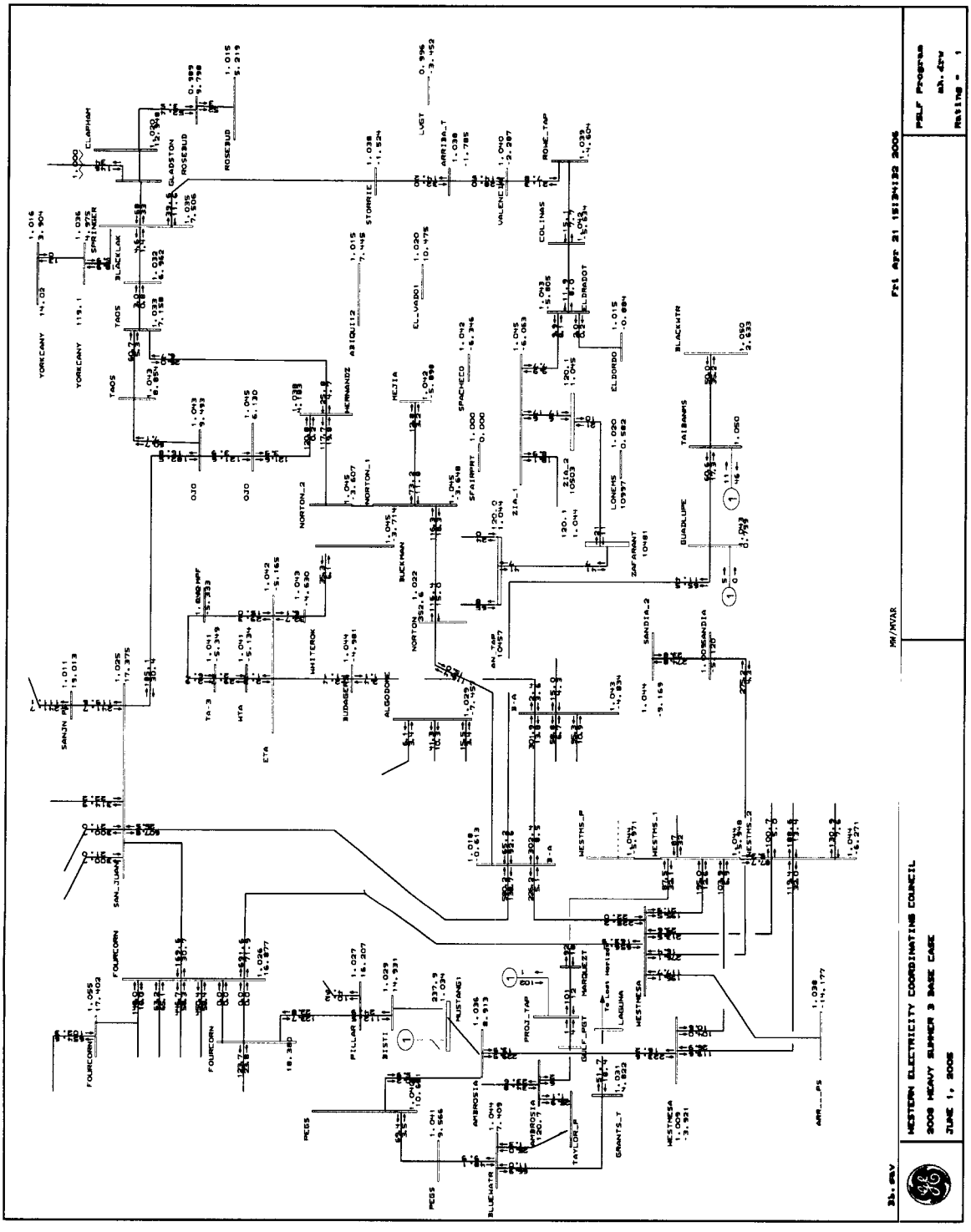

Figure B-3 – Scenario 2a: Without Mustang, With Project

Appendix C: Transient Stability Study Results

The following transient stability simulations plors illustrate the impact of the project on system dynamic performance. Additional simulation plots are available upon requests.

A1. Ambrosia – Project Contingency

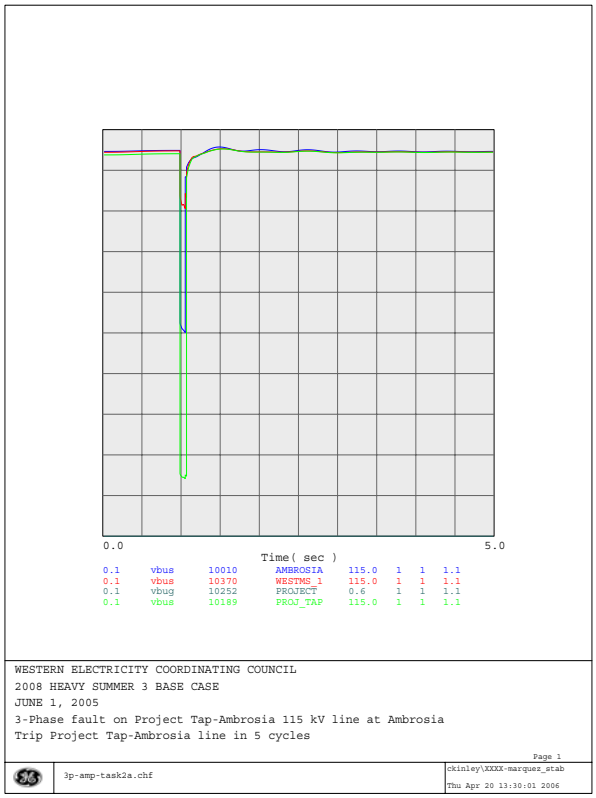

With Mustang, Without Project

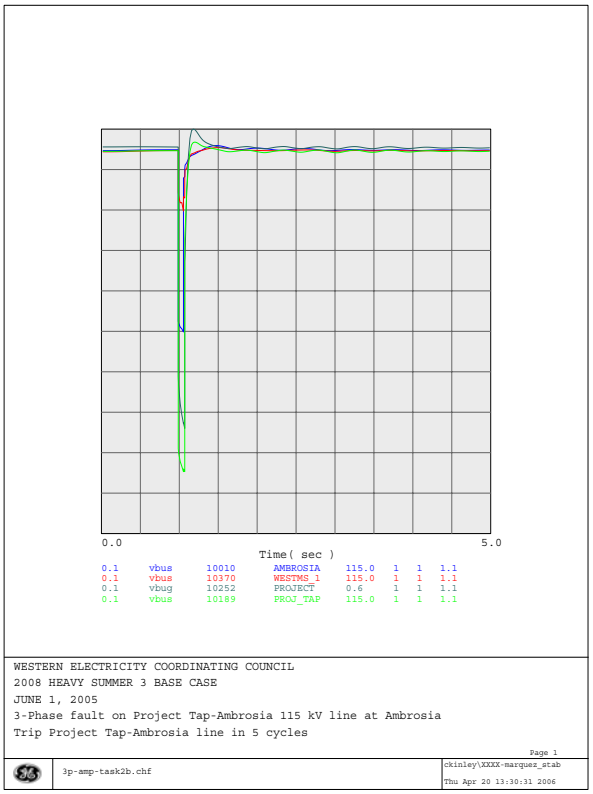

With Mustang, With Project

A2. West Mesa – Project Contingency

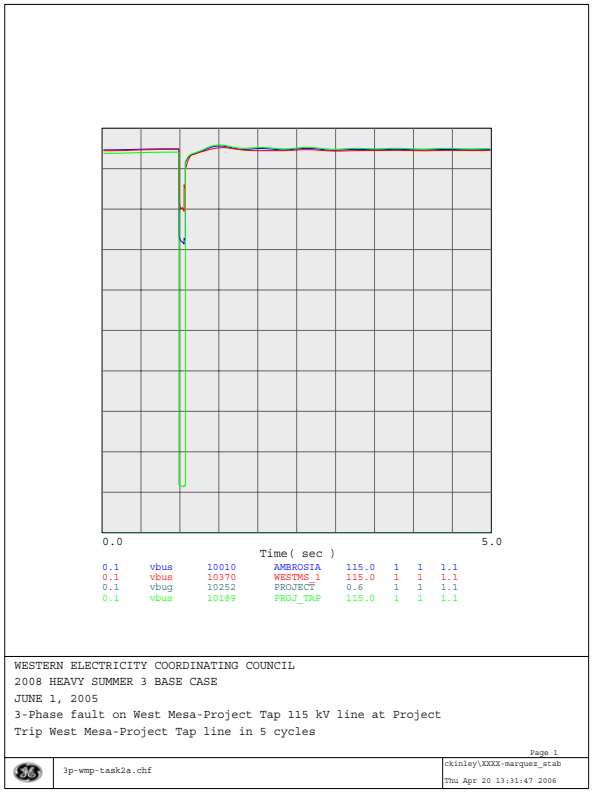

With Mustang, Without Project

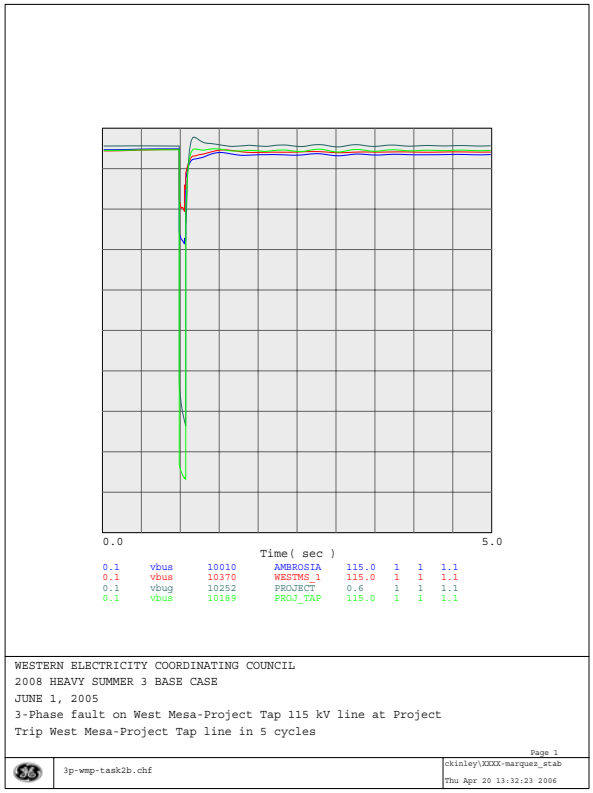

With Mustang, With Project

A3. San Juan – BA Contingency

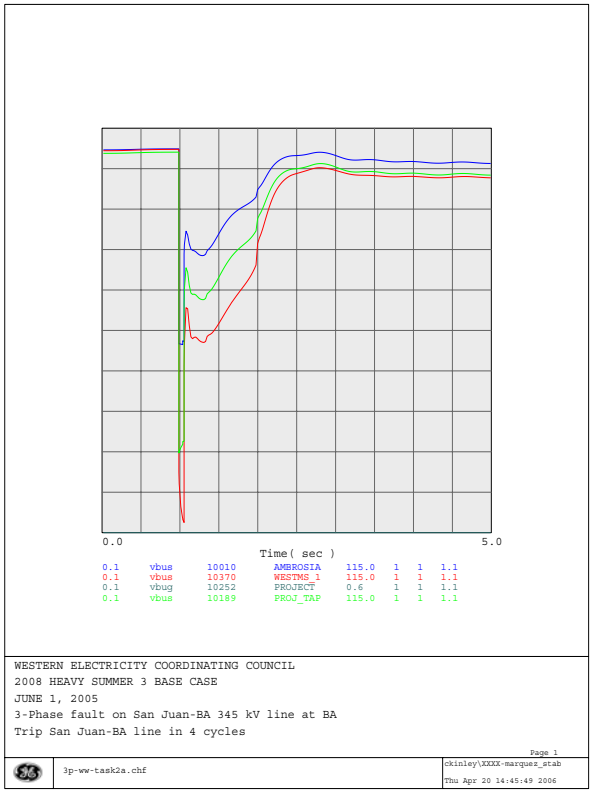

With Mustang, Without Project

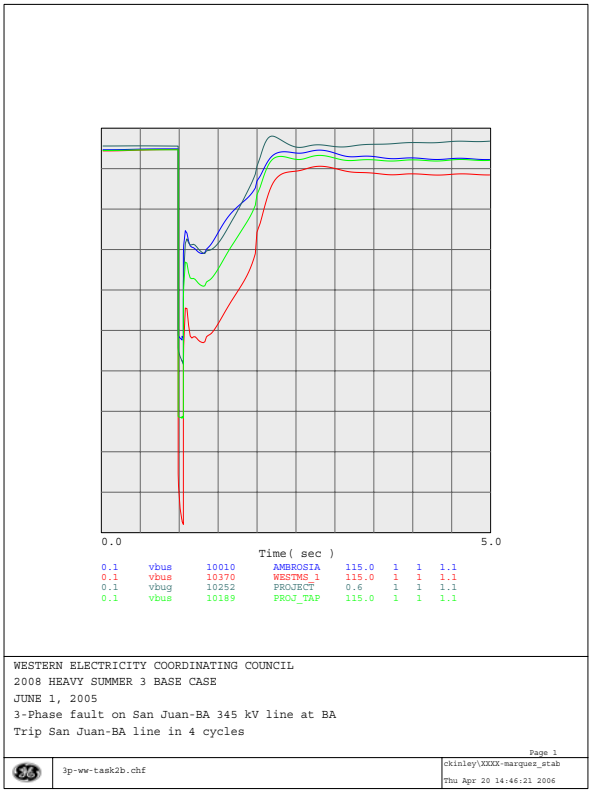

With Mustang, With Project

A4. Bisti - Mustang Contingency

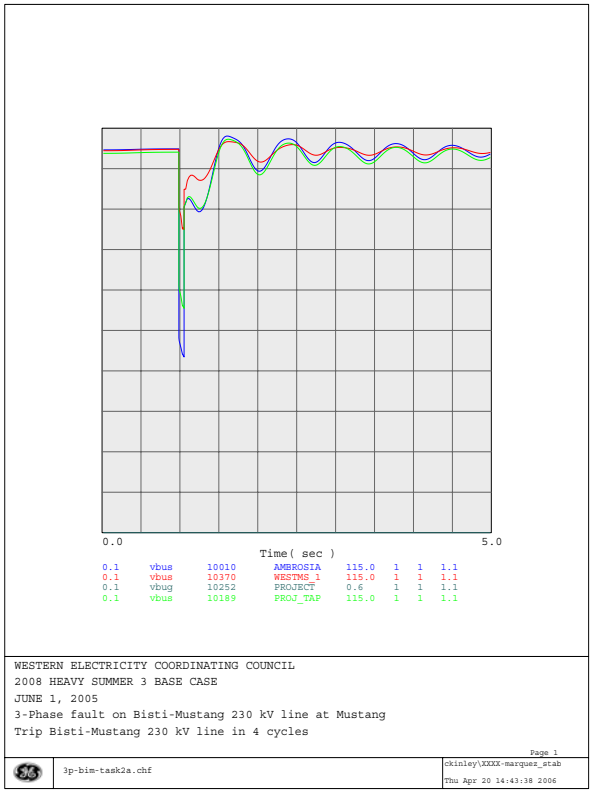

With Mustang, Without Project

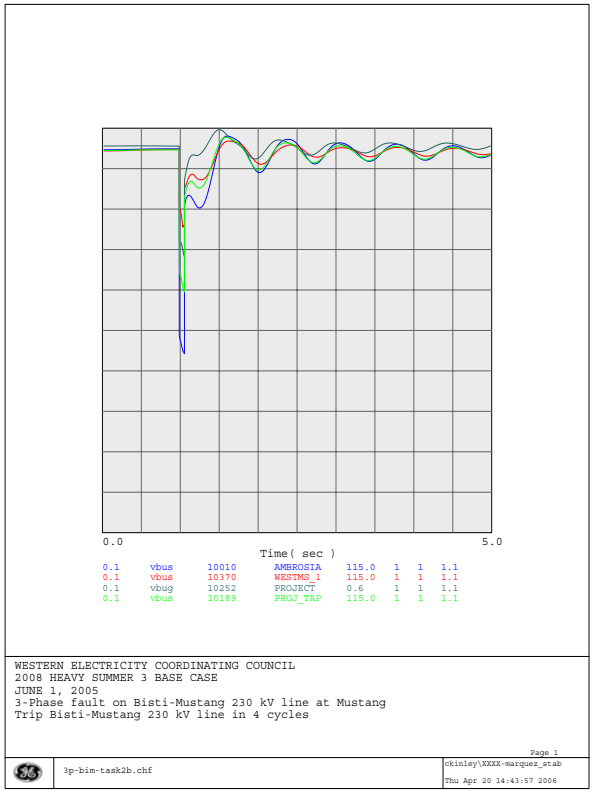

With Mustang, With Project

A5. Ambrosia - Project Contingency

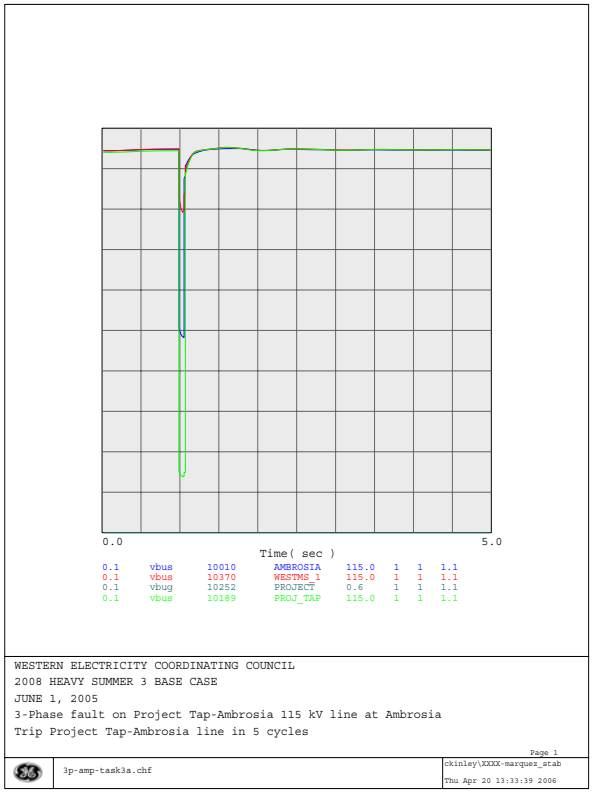

Without Mustang, Without Project

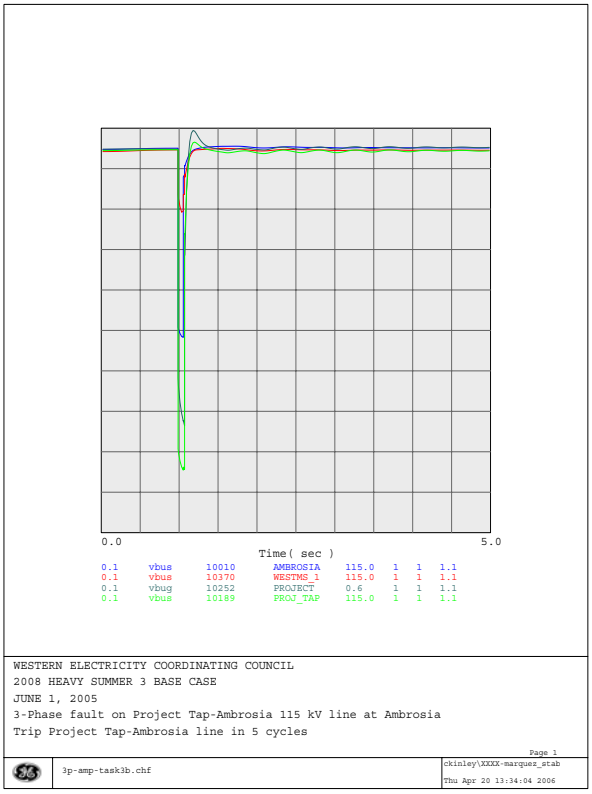

Without Mustang, With Project

A6. West Mesa - Project Contingency

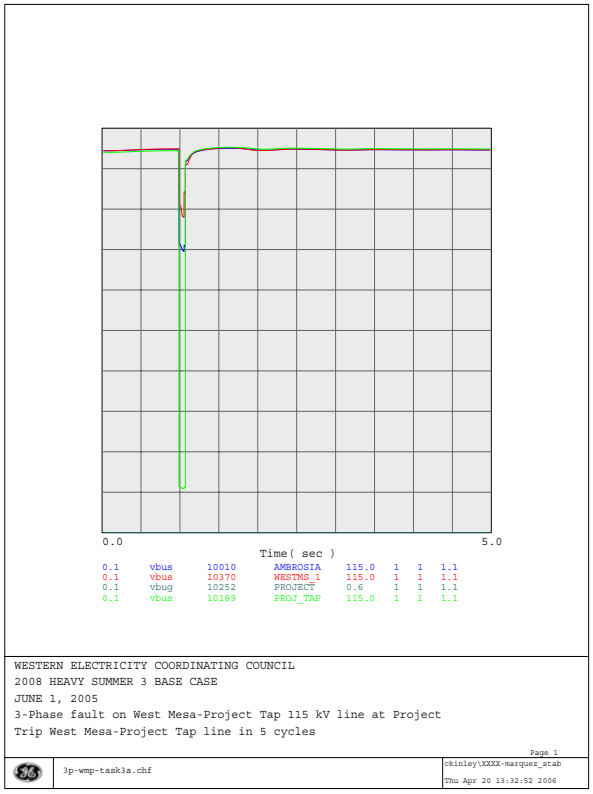

Without Mustang, Without Project

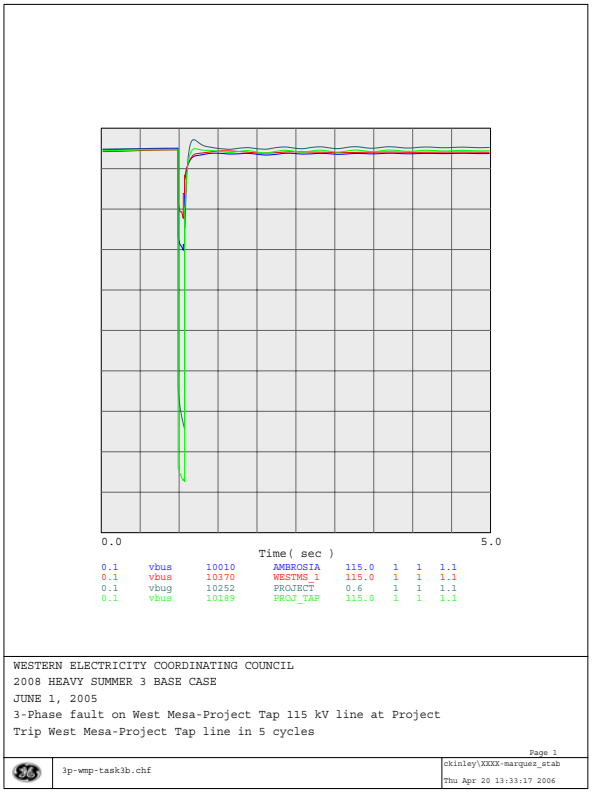

Without Mustang, With Project

A7. West Mesa - Project Contingency

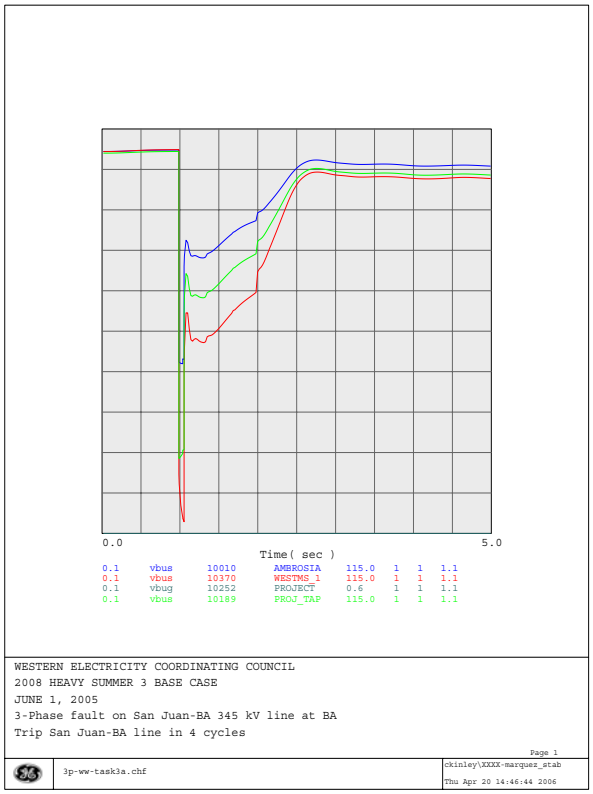

Without Mustang, Without Project

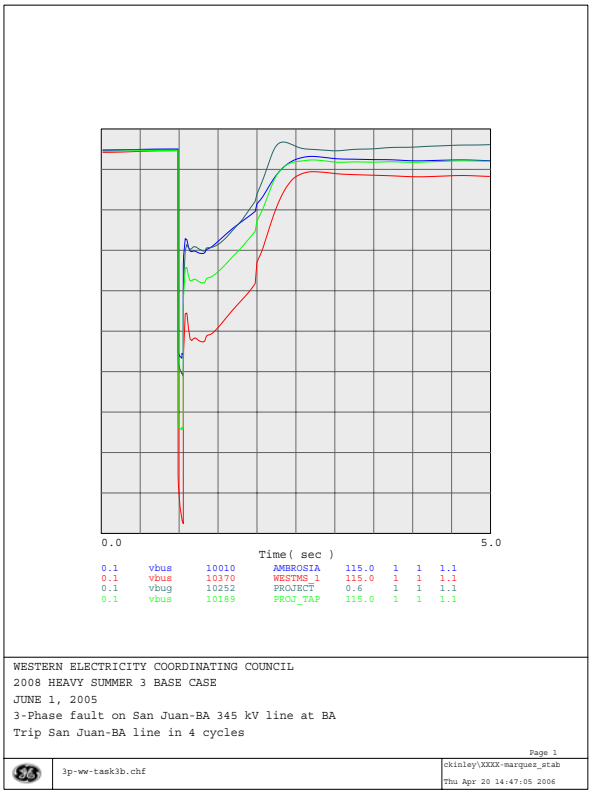

Without Mustang, With Project

A8. West Mesa - Project Contingency

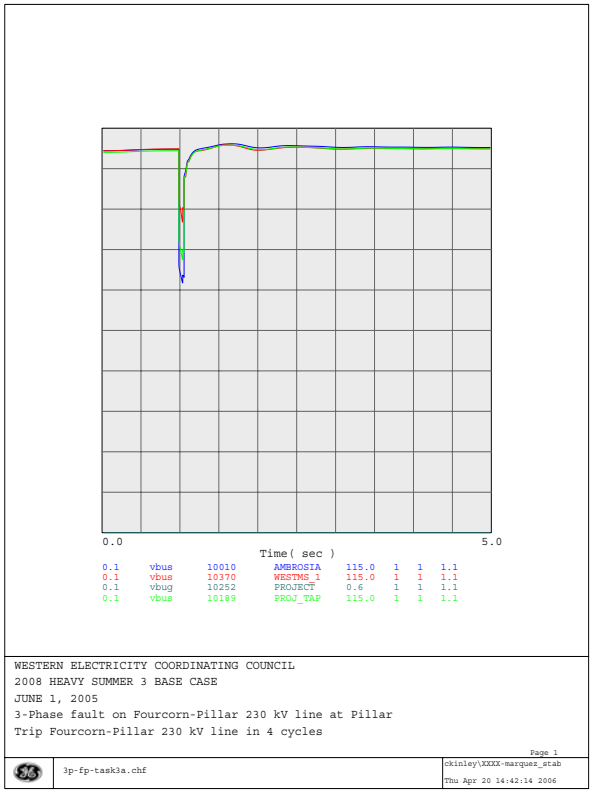

Without Mustang, Without Project

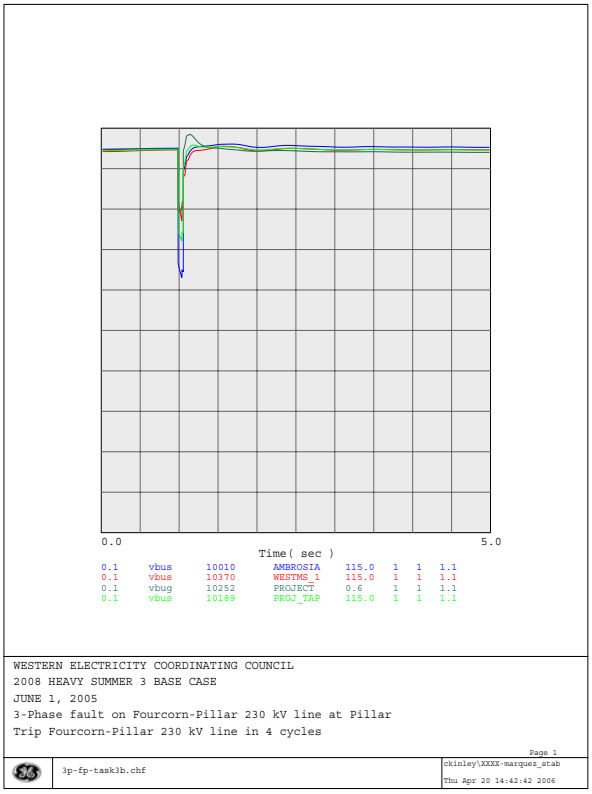

Without Mustang, With Project

McKinley County 102 MW Wind Generation Interconnection Project

(OASIS # IA-PNM-2003-06)

Interconnection Facilities Study
Final Report - August 2007

Prepared for:
XXXXXXXXX

Prepared by:
Public Service Company of New Mexico

Technical Services
Transmission Operations

Foreword

This Facilities Study Report was prepared by Public Service Company of New Mexico in response to a Generator Interconnection Request by XXXXXXX. Any correspondence concerning this document, including technical and commercial questions should be referred to:

Lead Director of Transmission Operations
Public Service Company of New Mexico
Alvarado Square MS-0604
Albuquerque, NM 87158
Phone: (505) 241-4570
Fax: (505) 241-4363

1. Introduction

In response to an interconnection request by XXXXXXXXX ("XXXX"), Public Service Company of New Mexico ("PNM"), performed a Facilities Study ("FS") to provide cost and construction schedule estimates for the facilities needed to physically and electrically interconnect XXXX's proposed 102 MW wind power plant in McKinley County, New Mexico ("Project"). The proposed point of interconnection would be at a new station approximately 10.5 miles west of the existing Marquez 115 kV Tap on the West Mesa – Gulf Minerals ("KM") line. The Project consists of 68 General Electric 1.5 MW wind turbine generators. The in-service date originally proposed is May 2007.

The System Impact Study[1] established the Facilities Study components listed below and depicted in Figure 1.

- **Component 1:** Construct a new 115 kV switching station on the KM line with ring bus configuration. This component includes communications/protection equipment at the new proposed and adjacent stations.

- **Component 2:** Address Bluewater - West Mesa 115 kV ("BW") line overload under N-1 contingency conditions. The SIS determined that a series reactor on the BW line would be required, unless the BW line can support at least 99 MVA (emergency), based on a weather study currently underway.

- **Component 3:** Address the Marquez Tap – West Mesa ("KM") line overload under N-1 contingency conditions by removing ground clearance limitations, unless the KM line can support at least 137 MVA (emergency), based on a weather study currently underway.

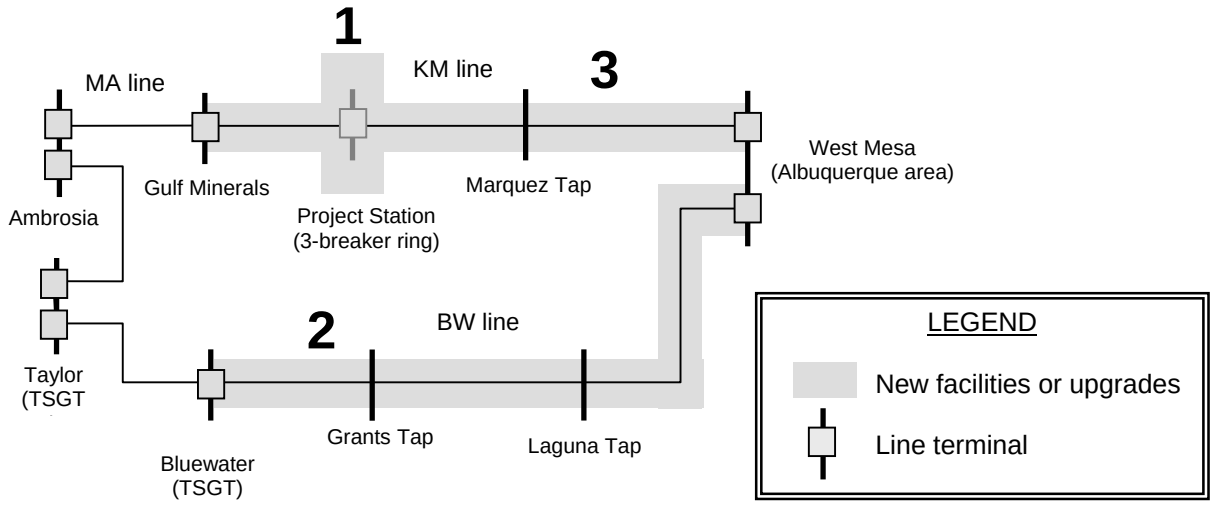

Figure 1 – Facilities Study Components

Based on a recently completed weather study for Western New Mexico, PNM has determined that the BW line can support 99 MVA on an emergency basis, assuming 3 ft. per second wind speed. Therefore, component 2 is not required to interconnect the Project.

[1] McKinley County 102 MW Wind Generation Interconnection Project, Interconnection System Impact Study, Final Report – May 2006.

PNM has also determined that the need to upgrade the KM line is independent of the Project. Therefore, PNM intends to pursue the KM line upgrade as a reliability project, at its own cost. Construction schedule estimates for this component are provided for reference.

2. Summary of Estimated Cost and Work Schedule

The full costs and construction schedule estimates for each component are summarized below.

Table 1 – Cost and schedule estimates

Comp.	Cost (2007 $)	Schedule
1	$7,288,584	18 months from the date XXXX gives written authorization to proceed
2	$0	This component is not required
3	$0	PNM is pursuing this project at its own cost. In-service date is 12/08.
Total	**$7,288,584**	

Please note that the schedule does not allow for the in-service date originally proposed by XXXX (May 2007). The cost estimate for Component 1 includes a turnkey engineering procurement contract for the station construction, as well as PNM costs for engineering, environmental, right of way, etc. Table 2 shows a more detailed cost breakdown.

Table 2 – Detailed cost breakdown for Component 1

Subcomponent	Cost (2007 $)
EPC Turnkey Contract for station construction	**$ 4,796,755**
PNM load A&G @ 5.5%	$ 263,822
PNM load E&S @ 6%	$ 287,805
EPC Loaded Total	**$ 5,348,382**
PNM (loaded)	
Transmission	$ 75,000
Stations	$ 375,000
Control & Relay	$ 100,000
Communications	$ 50,000
Environmental	$ 75,000
Right of Way	$ 200,000
Regulatory	$ 10,000
PNM Total	**$ 885,000**
15% Contingency	**$ 132,750**
Total project	**$ 6,366,132**
NMGRT @ 7.0%	$ 445,629
AFUDC @ 7.0%	$ 476,823
Loaded Total	**$ 7,288,584**

Detailed assumptions and further cost breakdown associated with the EPC turnkey contract are shown in Exhibit A. The following assumptions were applied to PNM's portion of the cost:

- The station design (Exhibit 3) is a 3-breaker ring expandable to a breaker-and-a-half station.
- XXXX's collector station is North of the 115 kV station, no KM line crossing.
- Communications link is microwave
- ROW includes for 4-acre station site and 1000 ft road from access developed by XXXX.
- PNM granted right to use of major access into the site through road developed by XXXX.
- No significant environmental permits required (no federal land).
- Station service for construction is power-pot-core transformer and backup generator.
- PNM costs include direct labor, transportation and materials to for KM line modifications at the station site, protection equipment upgrades at Gulf Minerals and West Mesa, testing, acceptance and commissioning.

It is likely that station construction associated with Component 1 will cause PNM to incur costs related to construction outages. At this time, PNM is not able to estimate the costs of construction outages to complete the interconnection and therefore these costs are not included in this Report. However, PNM reserves the right to recover such costs.

Major activities are presented in the schedules below for Component 1. Schedules are typical and will be further refined as project details become firm.

Table 3 – Itemized Work Schedule for Component 1

	Elapsed Months																	
	1	2	3	4	5	6	7	8	9	10	11	12	13	14	15	16	17	18
Design, including environmental and access review																		
Materials Order and Delivery																		
Preparation of construction documents and secure contractor																		
Construction (Turnkey Contract)																		

An overall map showing the physical locations of the facilities is shown in Exhibit B. Exhibit C shows a one-line diagram of the proposed Project Tap 115 kV station.

Exhibit A - Detailed Cost Breakdown for Construction of Interconnection Station (Turnkey Project)

POWER ENGINEERS

PNM McKinley County Wind Farm
115kV SWITCHYARD
PROJECT ESTIMATE — **Rev B - June 6, 2007**

Engineering	
Project Management	$167,000
Detail Design	$298,700
Surveying & Ground Resistance Testing	$5,000
Geotech Drilling	$10,000
Studies & Relay Settings	$60,000
	$540,700
Procurement	
Specifications & Procurement Services	$22,300
Structural Steel	$156,800
Insulators and Arresters	$84,780
Power Circuit Breaker, 138kV, 1200A (3 ea)	$161,850
Disconnect Switch, HO, 138kV, 1200A (8 ea)	$75,520
Disconnect Switch, MO, 138kV, 1200A (2 ea)	$26,800
Coupling Capacitor Voltage Transformer (9 ea)	$56,925
Standby Generator, Fuel Tank & ATS	$35,000
Metering Unit (3 ea)	$49,500
Station Service Equipment	$1,000
Control Enclosure	$160,000
Relay Panels	$102,000
Breaker Panels	$72,000
Revenue Meter in Panel	$22,220
SCADA Terminal	$85,000
Microwave Equipment	$42,475
AC & DC Panel Boards	$6,000
125VDC Battery & Charger	$15,000
Control Enclosure HVAC with EC	$27,000
Relay & Comms Upgrades in Existing Stations	$147,400
	$1,349,570
Construction	
Construction Management	$141,120
Mob/Demob	$81,000
Site Work - 4 acres	$109,800
Road - 1000ft	$10,020
Foundations	$403,370
Structural Steel	$122,720
Grounding & Fence	$383,841
Outdoor Raceways	$130,631
Bus and Jumpers	$214,200
Outdoor Equipment Install	$175,390
Control Enclosure & Equipment Install	$251,910
Low Voltage Wiring	$86,745
Relay & Comms Upgrades in Existing Stations	$119,100
Testing & Commisioning	$121,500
	$2,351,347
Contingencies	
Contingency on Equipment Procurement 15%	$202,436
Contingency on Construction 15%	$352,702
TOTAL PROJECT ESTIMATE	**$4,796,755**

Key Assumptions for Turnkey Project

PNM McKinley County Wind Farm
115kV SWITCHYARD
ESTIMATE ASSUMPTIONS - REV B - June 6, 2007

1. Site Work is assumed no rock excavation, maximum slope 5% - maximum cut & fill 18,300 cu yds. Compaction on Fill only. No drainage ditches or berms.
2. Access road all weather gravel road - 1,000 feet at $50,000 / mile
3. Grounding is assumed that 20 foot grid will be adequate
4. Foundations are estimated without a geo-tech report - Use PNM Standards
5. Winter construction is not anticipated
6. Elevation is 8,500 feet - Equipment Specified as BIL 650kV
7. Steel structures are PNM Standards. Assume 12,000 lb A-frame adequate for 477ACSR conductor
8. KM Line Outage - 2 days for drilling A-Frame Foundations
9. KM Line Outage - 2 days to set A-Frame and work conductors.
10. KM Line Outage - 1 day to remove through jumpers, make up connections to bus and connect static wires.
11. Station Service Power available from Collector Station. Backup power from Generator or Power VT. (Can also have power VT as primary with backup from collector station - same pricing)

Exhibit B – Physical Locations of the Interconnection Station

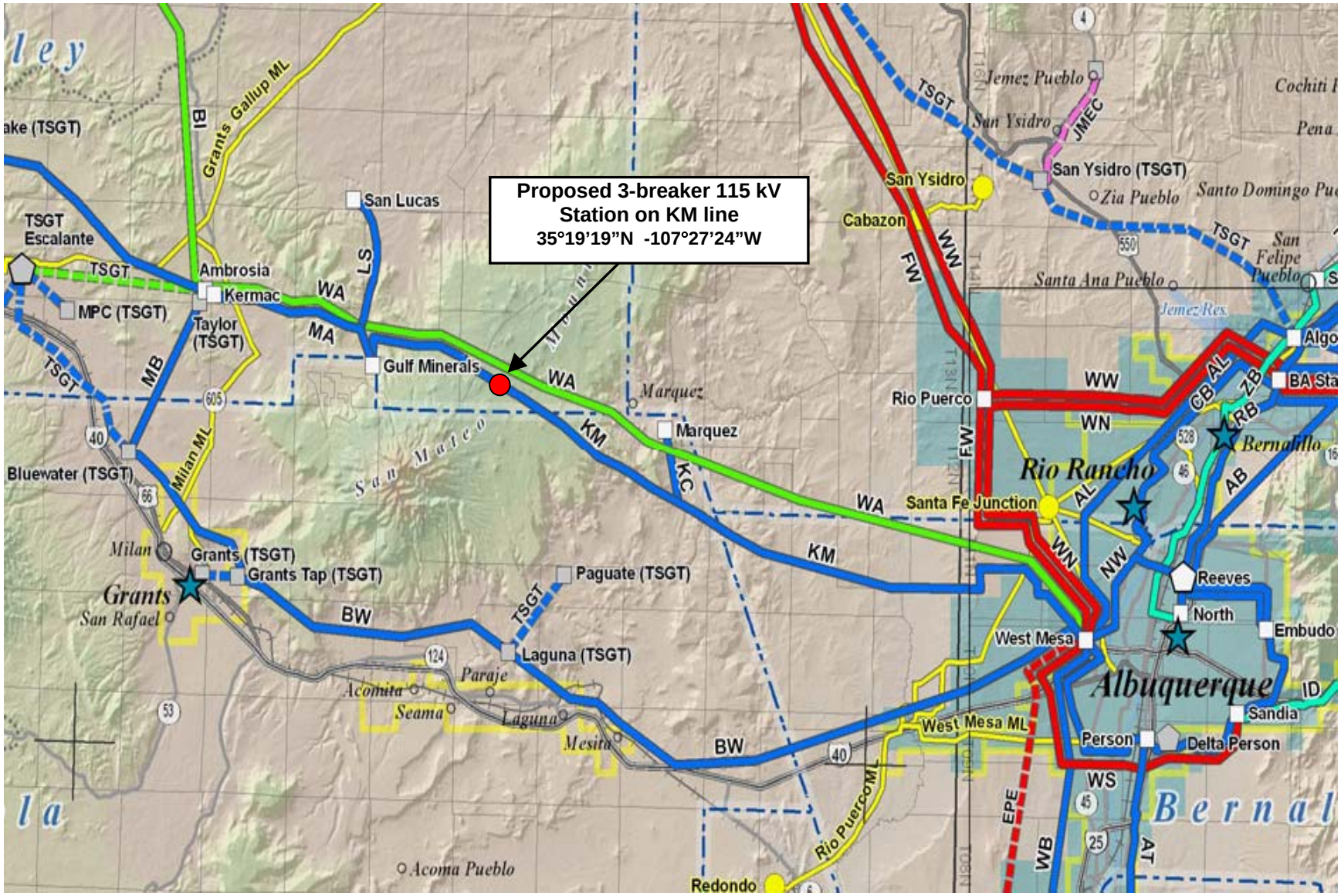

Exhibit C – One-line diagram of the Interconnection Station

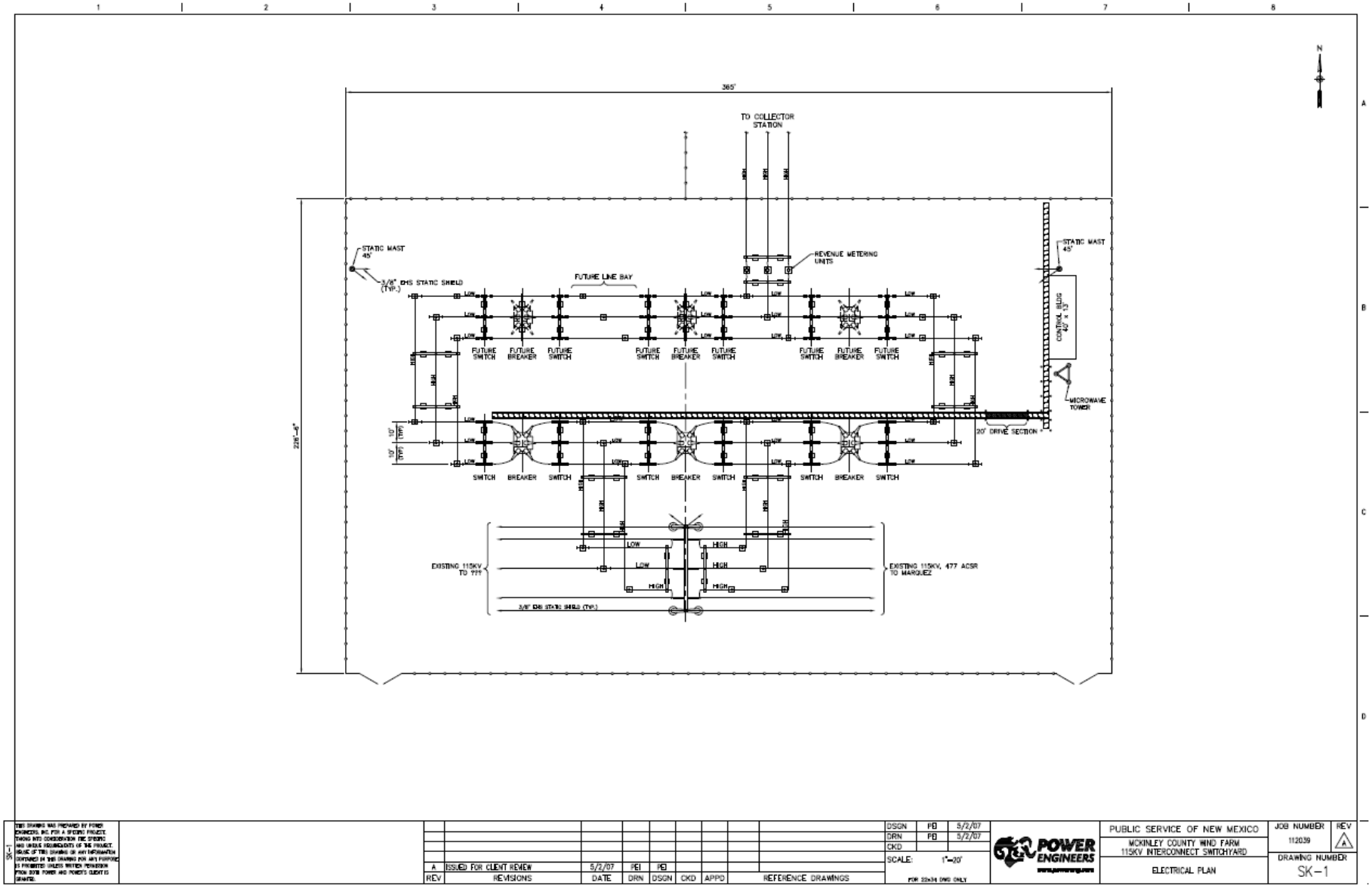

XXXXX
Milan Biomass-Solar Generation Project

Interconnection Feasibility Study

(OASIS # IA-PNM-2007-15)

September 2008

Prepared by:
ABB Consulting

Under contract with:
Public Service Company of New Mexico

Electric Services
Transmission Operations

Foreword

This report was prepared for XXX ("Interconnection Customer") by ABB Consulting[1], under contract Public Service Company of New Mexico ("PNM") Transmission Operations.

Any correspondence concerning this document, including technical and commercial questions should be referred to:

Gregory C. Miller
Lead Director, Transmission Operations
Public Service Company of New Mexico
Alvarado Square MS-0604
Albuquerque, NM 87158
Phone: (505) 241-4570
Fax: (505) 241-4363

[1] This document is an account of work sponsored by Public Service Company of New Mexico (PNM) and conducted by ABB Inc. Neither ABB Inc., nor any person or persons acting on behalf of ABB, Inc.: (i) makes any warranty or representation, expressed or implied, with respect to the use of any information contained in this report, or that the use of any information, apparatus, method, or process disclosed in this report may not infringe privately owned rights, or (ii) assumes any liabilities with respect to the use of or for damages resulting from the use of any information, apparatus, method, or process disclosed in this document.

Table of Contents

Executive Summary 4

1 Study Methodology and Criteria 7

1.1 Project Modeling 7

1.2 Base Case Development 8

1.3 Study Methodology 9

1.4 Powerflow Performance Criteria 10

1.5 Generator Reactive Power Range Criterion 10

2 NR (Network Resource) Interconnection Analysis 11

2.1 Reactive Power Analysis 11

2.2 Powerflow Contingency Analysis 14

2.3 Short Circuit Analysis 17

3 ER (Energy Resource) Interconnection Analysis 18

4 Cost and Schedule for Upgrades 19

4.1 NR Interconnection 19

4.1.1 Main Interconnection Plan 19

4.1.2 Optional Interconnection Plan 19

4.2 ER Interconnection 20

5 Conclusions 21

References

Appendix 1: Powerflow Diagrams: Main Interconnection Plan
Appendix 2: Powerflow Diagrams: Optional Interconnection Plan
Appendix 3: Powerflow Results: Main Interconnection Plan
Appendix 4: Powerflow Results: Optional Interconnection Plan

Executive Summary

On November 13, 2007, XXXX ("Interconnection Customer") perfected a request to interconnect a 42.588 MVA, 0.9 pf biomass generating unit with an additional 5 MW photovoltaic unit ("Project") to Public Service Company of New Mexico's ("PNM") transmission system in Cibola County, New Mexico. The proposed Project Point of Interconnection ("POI") is on the Bluewater – West Mesa 115 kV ("BW") line, approximately 3 miles from Bluewater towards Grants Tap. The projected in-service date is June 2011.

A feasibility study was conducted by ABB Consulting under contract to PNM to determine, on a preliminary basis, the project impacts and system reinforcements (if required) for safe and reliable interconnection of the Project to the PNM system. All modeling assumptions (base case, generation dispatch and Project data), as well as performance criteria were provided to ABB by PNM.

The electrical connection of the Project is as shown in Figure 1. The POI is assumed to be at a new 3-breaker 115 kV switching station ("Milan Station") to be constructed for the Project. The new station is to be built in a 3-breaker ring bus, expandable to breaker and a half configuration. Per PNM Facility Connection Requirements, the Project is required to install a 115 kV breaker at the high side of the Station transformer, as shown in Figure 1.

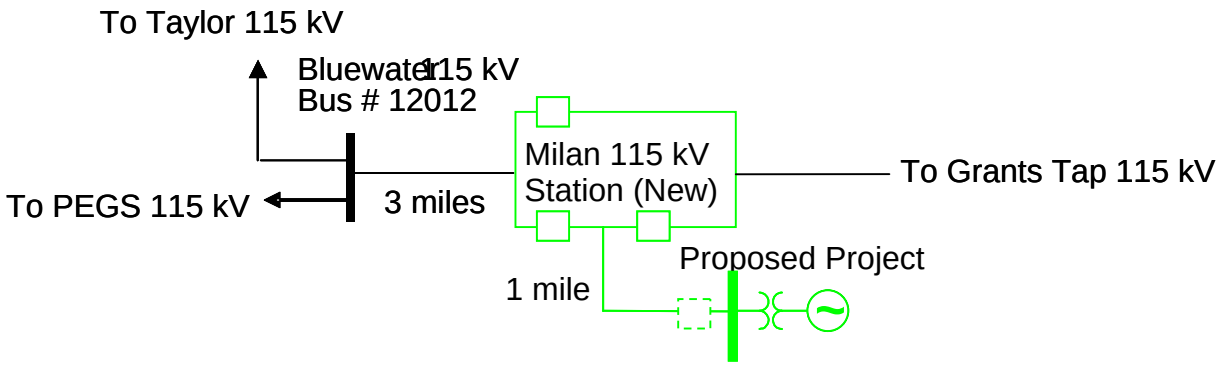

Figure 1. Project Interconnection

The feasibility analysis of the Milan Biomass – PV project was conducted using the GE-PSLF program. This analysis included a power factor analysis and a contingency powerflow analysis. PNM conducted a short circuit analysis, a summary of which is also included in this report.

The Interconnection Customer requested a Network Resource ("NR") analysis as well as an Energy Resource ("ER") analysis for the Project. The purpose of the NR analysis is to identify the Network Upgrades required for the Project to meet the requirements for Network Resource interconnection Service. The purpose of the ER analysis is to (i) identify the Network Upgrades necessary to allow interconnection of the full output of the Project, and (ii) identify the maximum allowed Project output that can be injected prior to the completion of any Network Upgrades, except Interconnection Facilities and upgrades required to mitigate short-circuit impacts.

NR Interconnection Analysis

The conclusion from the power factor analysis is that the Project meets PNM's power factor requirements at the POI, provided that the biomass generator's reactive capabilities are as stated in the Milan application, i.e. 0.90 pf lagging (overexcited) to 0.95 pf leading (underexcited). This assumes that the PV portion of the project operates at unity power factor. However, based on the machine capability curve provided with the interconnection application (see Figure 2), the core end heating limit may restrict the machine's leading (underexcited) power factor range to a lower level. This discrepancy should be reconciled in follow-up interconnection studies for the Project.

The conclusion from the contingency powerflow analysis is that the Project causes overloads on a portion of the Gulf Minerals – West Mesa 115 kV (KM) line for N-1 and N-2 contingencies involving the West Mesa – Ambrosia 230 kV (WA) line. This overload can be addressed by reconductoring the KM line from the proposed McKinley County station to West Mesa station (approximately 25 miles). A Project-related overload of the Bluewater – West Mesa 115 kV (BW) line from the proposed Milan Station to Grants Tap (approximately 9 miles) was also identified for N-1 and N-2 contingencies involving the WA line. This overload can be addressed by re-conductoring the BW line from the proposed Milan Station to Grants Tap (approximately 10 miles), and installing a 115 kV sectionalizing breaker at Grants Tap. Further analysis showed that interconnecting the Project at Grants Tap would remove the need to reconductor the portion of the BW line segment; however, the Project-related overload on the KM line would still exist; therefore, re-conductoring of that line would still be required.

The short circuit analysis showed no impacts to existing breakers in the Project area.

Based on the results above, the following system upgrades are required to interconnect the Project as a NR:

Table 1 – Cost and Construction Time Estimates
(Main Interconnection Plan)

Item	Cost Estimate	Construction Time Estimate
Milan Station	$3,000,000	18 months
KM Line Upgrade	$6,840,000	18 months
BW Line Upgrade	$1,305,000	
Sectionalizing Breaker at Grants Tap	$1,000,000	12 months
TOTAL COST	$12,145,000	

In lieu of the two last items in Table 1, a 4-breaker ring station at Grants tap could be developed to interconnect the Project, the Grants load, and the BW line (in and out). The costs for this optional interconnection plan are given in Table 2.

Table 2 – Cost and Construction Time Estimates
(Optional Interconnection Plan)

Item	Cost Estimate	Construction Time Estimate
Grants Station	$4,000,000	18 months
KM Line Upgrade	$6,840,000	18 months
TOTAL COST	$10,840,000	

The estimates in Tables 1 and 2 do not include the additional cost of increasing the Project's 115 kV interconnecting line from 1 mile (in the main plan) to 10 miles (in the optional plan), or the cost of the required 115 kV breaker at the high side of the station transformer.

ER Interconnection Analysis

For the ER analysis, it was concluded that the full output of the Project could be interconnected as an ER without network upgrades, provided that Interconnection Facilities are constructed. For this analysis, it was assumed that the Project output displaces generation in the Project area.

Neither NR nor ER interconnection service conveys transmission service. Additional Network Upgrades within and outside the PNM transmission system may be required for delivery service. The extent of the additional Network Upgrades that would be required depends on the timing of the transmission service request, the type of delivery service requested, and the specific Point of Delivery, if applicable.

All the results discussed in this report are subject to further review in the System Impact Study.

1 Study Methodology and Criteria

1.1 Project Modeling

The Project was represented in the powerflow model as shown in Figure 1 below.

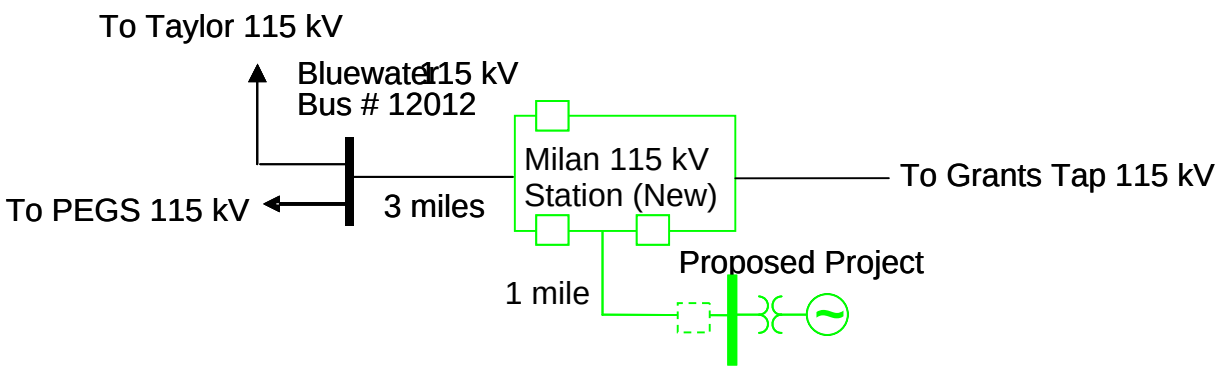

Figure 1 – Project Interconnection

In the figures above, existing115 kV transmission facilities are shown in black. The project facilities are shown in green. Milan Station (proposed Project Point of Interconnection) is about 3 miles from Bluewater towards Grants. Per PNM Facility Connection Requirements[2], the Project is required to install a 115 kV breaker at the high side of the Station transformer, as shown in Figure 1.

The project parameters provided by the Interconnection Customer are listed below.

Generator Data

Biomass Generator

Nameplate rating:	*42.588 MVA rating*
Net Plant Output:	*35.5 MW summer, 36.7 MW winter (use winter output for study)*
Reactive:	*Rated power factor: 0.90 (lag) 0.95 (lead)*
Terminal voltage:	*13.8 kV*

PV unit

Nameplate rating:	*Inverter*
Net Plant Output:	*5 MW*
Reactive:	*Rated power factor: 1.0*
Terminal voltage:	*13.8 kV (model at same bus as biomass generator)*

[2] See PNM NERC FAC-001-R1.1 GENERATION FACILITIES

Station step up transformer

Rating:	*50/62.5/75 MVA*
Voltage Ratio	*13.8 / 115 kV*
Impedance	*R = 0.007, X =0.07 p.u. on 50 MVA base*

Interconnection line

Assume 1 mile 115 kV line (R = 0.00278, X = 0.00576, B=0.00067pu on 100 MVA base)

The distance from Bluewater to Grants Tap is 11.71 miles. The impedances used for the Bluewater-Milan and Milan– Grants Tap were then proportioned from the overall impedance of this line by the ratios 3/11.71 and (11.71-3)/11.71, respectively.

Generation Displacement Methodology

For the purposes of the NR analysis, the Project output is assumed to displace generation at San Juan generating station.

For the purposes of the ER analysis, it is assumed that generation in the Project area, from existing or proposed projects can be reduced. In general, the generators that are assumed to be at reduced output are selected such that the Project's ability to inject power into the system is optimized, as needed. For the ER analysis in this study, the Project output is displaced at PEGS.

1.2 Base Case Development

A WECC 2012 heavy summer case (12HS2A) was used to develop the base cases. Generation dispatch, transmission scenarios and the Project were added as discussed below.

Generation Dispatch

Proposed generation projects in the local holding a senior position in PNM's Generator Interconnection Queue, and their respective transmission system reinforcements, are included in the base cases. Certain existing or proposed projects outside the study area, which do not have an impact on the Project, were excluded or were not dispatched. Table 1 shows the generation pattern for existing and proposed generation projects.

Table 1 – Base-line generation pattern

Unit	Nameplate MW Rating	MW Output Level
Existing Reeves 1	44	0
Existing Reeves 2	43	0
Existing Reeves 3	67	66
Existing Delta-Person	139	80
Existing Valencia Energy Facility	143	0
Existing Taiban Mesa Wind Project **	200	0
Existing Aragonne Mesa Wind project *	200	0
Proposed McKinley Wind Project	100	100
Proposed Torrance Biomass Project	37.5	37.5

Proposed Torrance Wind Project **	100	0
Proposed Eastern and Northern N.M. Projects**		0
Proposed Albuquerque area Projects **		0

* 90 MW has been developed to date.
** These projects are outside the study area and do not have an effect on the Study.

In the base cases, Southern New Mexico Import (SNMI) level is approximately 355 MW in the import direction. The Arroyo Phase Shifting Transformer (PST) is scheduled at 60 MW southbound. The Blackwater HVDC converter is scheduled at 50 MW Westbound.

1.3 Study Methodology

Four study scenarios were investigated as given in Table 2 below. The first two scenarios (1a and 1b) represent heavy summer load levels. Scenarios 2a and 2b represent off-peak scenarios in the Project area.

Table 2 – Study Scenarios Evaluated

Scenario	Description
1a	Peak summer load; Milan Biomass – PV out of service
1b	Peak summer load; Milan Biomass – PV in service
2a	60% load level in Zone 122; Milan Biomass – PV out of service
2b	60% load level in Zone 122; Milan Biomass – PV in service

The above scenarios were developed from the PNM-supplied base case as described below.

Base Cases

PNM supplied the following case to ABB for the study:

Scenario 1a: pnm-wnm.sav

This case represents 2012 Heavy Summer conditions, without the Milan Biomass – PV Project. ABB Modified this case to produce the following additional study cases:

Scenario 1b: pnm-wnm_milan-on.sav

Zone 122 scaled to 60% load:

Scenario 2a: pnm-wnm_60pct.sav
Scenario 2b: pnm-wnm_60pct_milan-on.sav

For the post-Project cases 1b and 2b, the Project generation was displaced at San Juan.

For the cases with 60% load in Zone 122, the reduced load was displaced by reducing load-side generation in the Albuquerque area, specifically at Delta-Person.

Powerflow diagrams for the above four study scenarios are given in Appendix 1.

1.4 Powerflow Performance Criteria

The powerflow performance criteria given in Table 3 below were used to evaluate the impact of the Project.

Table 3 – Powerflow Performance Criteria

Area	Conditions	Loading Limits	Voltage (p.u.)	Voltage Drop	Application
EPEC (Area 11)	Normal	< Normal Rating	0.95 - 1.05		69kV and above
			0.95 - 1.10		Artesia 345 kV
			0.95 - 1.08		Arroyo 345 kV PST source side
			0.90 - 1.05		Alamo, Sierra Blanca and Van Horn 69kV
	Contingency	< Emergency Rating	0.925 - 1.05	7%	60 kV to 115 kV
			0.95 - 1.07	7%	Artesia 345kV
			0.95 - 1.08	7%	Arroyo 345kV PST source side
			0.90 - 1.05		Alamo, Sierra Blanca and Van Horn 69kV
			0.95 - 1.05	7%	Hidalgo, Luna, or other 345 kV buses
PNM (Area 10)	Normal ALIS	< Normal Rating	0.95-1.05		46 kV and above*
	Contingency N-1	< Emergency Rating	0.925-1.05	6 %**	46 kV to 115 kV
			0.90 – 1.05	6 %**	230 kV and above
	Contingency N-2	< Emergency Rating	0.90-1.05	10 %	46 kV and above*
Tri-State (zones 120-123)	Normal ALIS	< Normal Rating	0.95-1.05		All buses
	Contingency N-1	< Emergency Rating	0.925-1.05	6 %**	Tri-State buses served from the PNM System (46 kV to 115 kV)
			0.90 – 1.05	6 %**	Tri-State buses served from the PNM System (230 kV and above)
			0.90-1.1	7 %	Tri-State buses served from the Tri-State system
	Contingency N-2	< Emergency Rating	0.90-1.1	10%	All buses

*Taiban Mesa and Guadalupe 345 kV voltage 0.95 and 1.1 p.u. under normal and contingency conditions.
** For PNM buses in southern New Mexico and Tri-State buses in southern New Mexico served from the PNM system, the allowable N-1 voltage drop is 7%.

1.5 Generator Reactive Power Range Criterion

All generators that seek to interconnect to the PNM transmission system must comply with

certain reactive power requirements as outlined in PNM's Facility Connection Requirements[3]. For conventional generators, the power factor requirement is a net +/- 0.95 pf range at the POI.

2 NR Interconnection Analysis

2.1 Reactive Power Analysis

Powerflow analysis was performed to ensure that the proposed generator meets PNM's power factor requirements at the Point of Interconnection (POI), where the POI is defined as the point where the Project facilities interconnect to the PNM transmission system.

Synchronous generators larger than 20 MW connecting to the PNM transmission system are required to have a power factor range of 0.95 overexcited to 0.95 underexcited as measured at the Point of Interconnection [1].

The analysis thus focused on determining whether the above requirement is met for the Project.

The Project application contained the following information:

1. Name Plate Rating: **42.588** MVA plus 5 MW Solar Photovoltaic
2. Rated Power Factor: **0.90** (lag), **0.95** (lead); required: 0.90 and 0.95 or better, respectively
3. Terminal Voltage **13.8** kV, Short Circuit Ratio (SCR) **79%**
4. Estimated capacity ratings (at high side of GSU): **36.7** MW @0°F, **36.4** MW @20°F, **36.1**MW @59°F, **35.8** MW @90°F, **35.5** MW @105°F. Auxiliary Load (Station Service) **From 10 to 13% House Loads, varies with load and temperature. Estimated 5 MW at rated capacity.** Mvar at maximum real power output: **2.4 Mvar**
5. Generator Reactive Capability Curve: **See Attached**

The generator reactive capability curve provided with the application is shown as Figure 2 below. It is noted that the base power given in the Project application (42.588 MVA) is slightly higher than the 41.117 MVA shown in Figure 2. It is assumed that the machine cooling system for the Milan project is appropriate for the higher MVA rating.

[3] See PNM FAC-001-R2.1.3 - VOLTAGE LEVEL AND MW/MVAR CAPACITY OR DEMAND. For all practical purposes, the Project can be viewed as a conventional synchronous generator given the relatively small solar PV component.

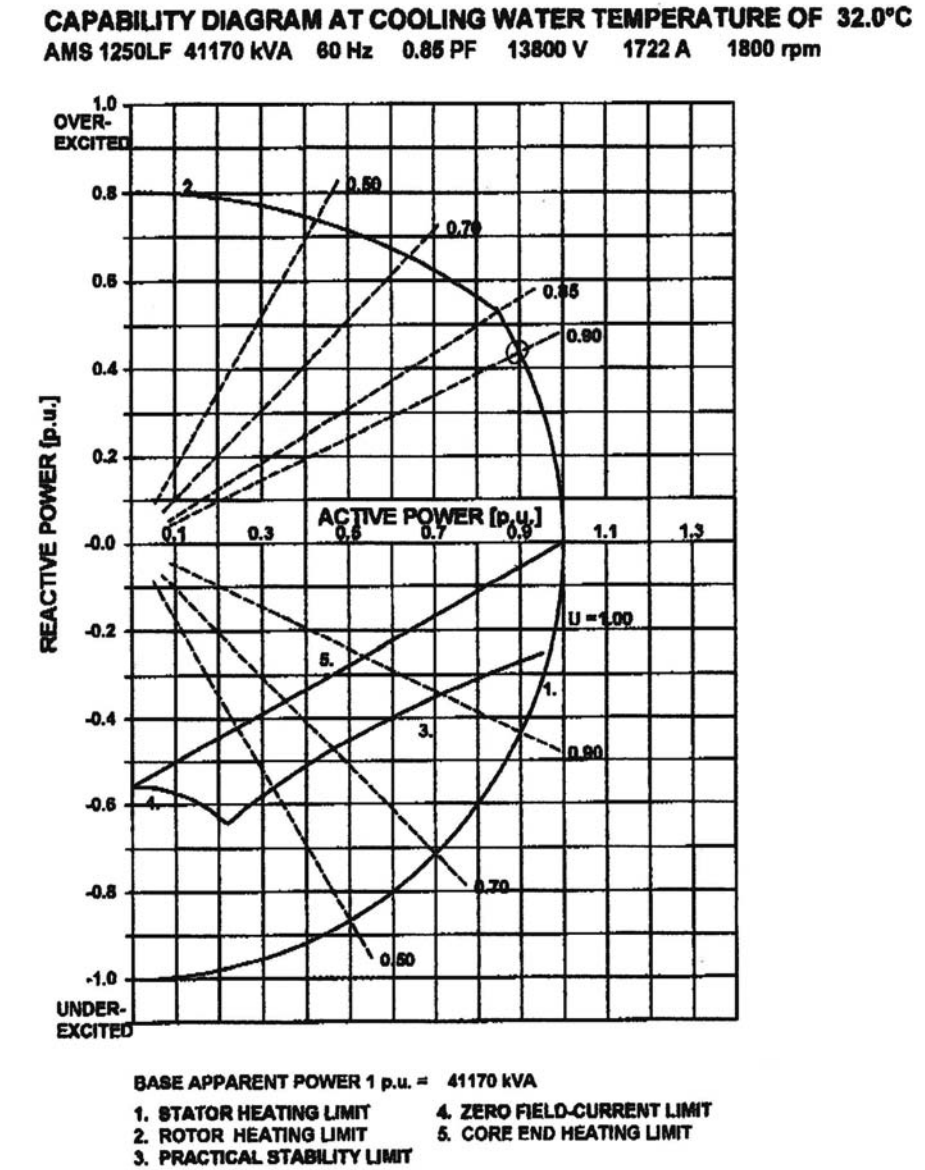

Figure 2. Capability Curve for Generator Similar to Milan Biomass

The following observations from Figure 2 are carried forward into the Power Factor Analysis:

1. The 0.90 pf lagging (capacitive) reactive capability stated in the Project application is valid for real power up to 38.329 MW (0.90 pu). For real power output above 38.329 MW, the reactive capability is reduced below the capability in the Project application. For real power output of 1.0 pu (42.588 MW), the reactive capability is zero.
2. The leading (inductive) reactive capability appears to be restricted by the core end heating limit, to -0.05 pu (-2.129 Mvar) at 38.329 MW (0.90 pu) real power output.

Per information from PNM, the power factor analysis has been carried out with the voltage at the POI fixed at 1.00 pu. For this condition, the following results were calculated from powerflow analysis:

Table 4 – Power Factor Analysis Results

Case	Biomass	PV	Aux Load	At POI
1	38.329 MW 18.564 Mvar (0.90 pf lagging)	5 MW 0 Mvar (1.0 pf)	- 5 MW - 2.4 Mvar (0.90 pf)	38.1 MW 13.8 Mvar (0.94 pf lagging)
2	38.329 MW -13.298 Mvar (0.95 pf leading)	5 MW 0 Mvar (1.0 pf)	- 5 MW - 2.4 Mvar (0.90 pf)	38.1 MW -18.2 Mvar (0.90 pf leading)
3	38.329 MW -2.129 Mvar (core end heat limit)	5 MW 0 Mvar (1.0 pf)	- 5 MW - 2.4 Mvar (0.90 pf)	38.1 MW -6.6 Mvar (0.985 pf leading)

Table 4 shows that the Project would meet the interconnection power factor requirement if the reactive power range of the biomass generator is 0.90 overexcited to 0.95 underexcited, as stated in the application (cases 1 and 2). However if the underexcited capability of the biomass generator is limited as shown in Figure 2 (case 3), then the Project would not satisfy the power factor requirement. To meet the requirement of 0.95 pf leading at the POI, the Project would need to install an additional 5.9 inductive Mvars in the form of a switched shunt reactor.

For the powerflow contingency analysis, the biomass generator was assumed to be at the proposed winter output (36.7 MW), and with reactive capability limits set to +18.6 Mvar (0.90 pf overexcited) and -13.3 Mvar (0.95 pf underexcited) as stated in the application. The Milan biomass generator was set to control its own terminal voltage per PNM's study criteria and guidelines [3].

The powerflow diagrams for the four scenarios described in Table 2 are given in Appendix 1.

2.2 Powerflow Contingency Analysis

Powerflow analysis was conducted using GE-PSLF with the PSAS automation scripts. The contingencies evaluated are listed in Table 5 below. The Project is assumed to require a new 115 kV station (Milan) on the existing Bluewater – West Mesa line.

Table 5 – List of Contingencies

N-1 Contingencies
Four Corners–West Mesa 345 kV
San Juan–Rio Puerco 345 kV
Bluewater–Ambrosia 115 kV
Bluewater–PEGS 115 kV
Bluewater–West Mesa 115 Kv*
Bluewater–Milan 115 kV
Milan– West Mesa 115 kV
PEGS–Yahtahey 115 kV
PEGS–Ambrosia 230 kV
West Mesa–Ambrosia 230 kV
West Mesa-MKCOWIND 115 kV

*Pre-Project only.

N-2 Contingencies
West Mesa–Ambrosia 230 kV and Ambrosia–Bisti 230 kV
West Mesa–Ambrosia 230 kV and Ambrosia–PEGS 230 kV

For the base cases described in Table 2 and the contingencies given in Table 5, powerflow contingency analysis was performed using the PSAS simulation tool. The results of the pre- and post-Project conditions were compared to identify thermal and voltage criteria violations caused by the Project, per the criteria shown in Table 3.

The results are included in Appendix 3 and are discussed below.

Pre-Contingency Low and High Voltage Violations:

No violations due to the Project are noted.

Pre-Contingency Voltage drop or rise Violations:

No significant impacts due to the Project are noted.

Pre-Contingency Overloads:

No violations due to the Project are noted.

Post-Contingency Low and High Voltage Violations:

No significant impacts due to the Project are noted.

Post-Contingency Voltage drop or rise Violations:

No significant impacts due to the Project are noted.

Post-Contingency Overloads:

The Bluewater – West Mesa (BW) and McKinley County – West Mesa (KM) 115 kV lines overload for the Ambrosia – West Mesa 230 kV N-1 contingency. The magnitude of the overloads in the various sections of the BW and KM lines are shown in the table below

Table 6. Overloads for Ambrosia – West Mesa 230 kV N-1 Contingency (Main Interconnection Plan)

Line Section	Rating Amps	Peak Load		60% Load		Line Miles
		Pre-Proj	Post-Proj	Pre-Proj	Post-Proj	
MILAN_TP 115.00-GRANTS_T 115.00 ck=1	497	0.944	1.024	0.924	1.005	8.7
LAGUNA 115.00-GRANTS_T 115.00 ck=1	497	0.822	0.901	0.852	0.932	
MKCOWIND115.00-MARQUEZT 115.00 ck=1	668	0.982	1.016	1.004	1.04	45.6
MARQUEZT 115.00-UNSER 115.00 ck=1	668	0.974	1.007	0.996	1.032	
UNSER 115.00-WESTMS_1 115.00 ck=1	668			0.87	0.905	

Several N-2 contingencies also showed pre-existing and Project-related overloads, as shown in Appendix 4. It is assumed that these pre-existing and project-related overload conditions can be addressed by generation tripping.

Network upgrades are required to address these overloads if Network Resource Interconnection Service will be pursued for the Project. It should be noted that the BW and KM line ratings of 99 MVA and 134 MVA, respectively, reflect conductor temperature limits. Therefore, re-conductoring the lines would be required. The following Network Upgrade plan would be required:

1. KM line upgrade

   Re conductor McKinley County – West Mesa line (45.6 miles)

2. BW line upgrade

   Reconductor Milan – Grants Tap (8.7 miles) and add 115 kV sectionalizing breaker at Grants Tap

A sensitivity study showed that connection of the Project at Grants Tap instead of the proposed Milan station would negate the need to reconductor the BW line section. This would require a longer interconnection line from the Project to the Point of Interconnection. If this option is pursued, a 4-breaker interconnection station would be required at Grants, in lieu of a 3-breaker interconnection station at Milan and sectionalizing breaker at Grants Tap. This configuration is shown in Figure 3. Note that the Project would still be required to install a 115 kV breaker at the high side of the Station transformer.

The optional interconnection increases the length of the new 115 kV line to around 10 miles, as compared to the 1 mile interconnecting line length studied above. Powerflow diagrams for this optional plan are given in Appendix 2.

Reactive power at the POI has not been studied for this optional interconnection. If reactive losses are significant over the 10 mile interconnecting line, then the Project may need to add a small shunt capacitor at the Project location to meet the interconnection requirement.

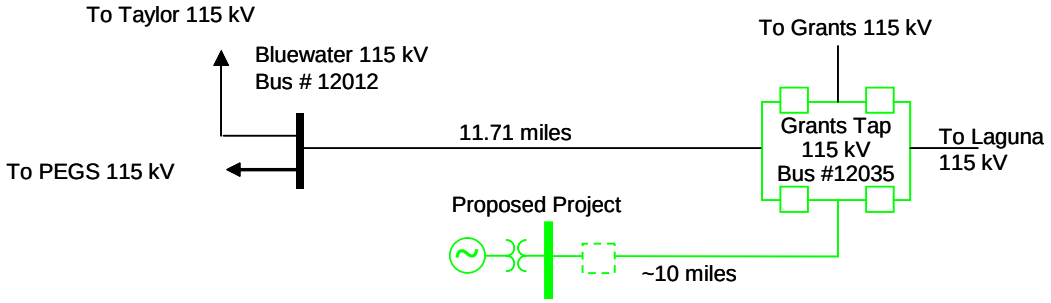

Figure 3. Optional Project Interconnection

The powerflow results for the optional interconnection plan are given in Appendix 4. The voltage results are similar for both the main and the optional interconnection. The main difference lies in the calculated post-contingency overloads, which are summarized in Table 7 for the optional interconnection.

For the N-1 contingency West Mesa – Ambrosia 230 kV, the Project-related overload of 1.04 pu identified previously on the MKCOWIND – MARQUEZT 115 kV line section is reduced slightly to 1.035 pu for the optional interconnection plan. Similarly, the Project-related overload on the MARQUEZT – UNSER 115 kV line section of 1.032 pu for the main interconnection plan is reduced to 1.026 pu for the optional interconnection plan. This means that the portion of f the KM line from MKCOWIND to West Mesa would still need to be reconductored.

Several N-2 contingencies also showed pre-existing and Project-related overloads, as shown in Appendix 4. It is assumed that these pre-existing and project-related overload conditions can be addressed by generation tripping.

Table 7. Overloads for Ambrosia – West Mesa 230 kV N-1 Contingency (Optional Interconnection Plan)

Line Section	Rating Amps	Peak Load		60% Load		Line Miles
		Pre-Proj	Post-Proj	Pre-Proj	Post-Proj	
LAGUNA 115.00-GRANTS_T 115.00 ck=1	497		0.933		0.965	
LAGUNA 115.00-LAGUNAT 115.00 ck=1	497				0.928	
LAGUNAT 115.00-LSTHRZNT 115.00 ck=1	497				0.923	
MKCOWIND115.00-MARQUEZT 115.00 ck=1	668	0.982	1.01	1.005	1.035	45.6
MARQUEZT 115.00-UNSER 115.00 ck=1	668	0.974	1.002	0.997	1.026	
UNSER 115.00-WESTMS_1 115.00 ck=1	668				0.9	

The optional interconnection relieves the overload on the Milan Tap-Grants Tap 115 kV line section, and slightly alleviates the overload on the Mkcowind-Marquez-Unser 115 kV line sections. However, full removal of the remaining overload on this line would still require reconductoring the Mkcowind--West Mesa #1 115 kV line (45.6 miles).

2.3 Short Circuit Analysis

Table 8 below shows that, without the Project, fault current at West Mesa and Person 115 kV stations exceed 90% of the momentary current rating of several breakers. A total of ten breakers are affected by this pre-existing condition. For this analysis, it was assumed that a series reactor is installed at West Mesa. It is assumed that pre-existing short circuit issues are addressed by breaker replacement associated with previously proposed generator interconnection and transmission expansion projects. The addition of the Project does not impact additional breakers. Fault current in the Project area is well below existing breaker ratings. In conclusion the addition of the Project does not impact the system from a short circuit point of view.

Table 8 – Number of circuit breakers above 90% of interrupting (IN) and momentary (MO) current rating

	Person 115 kV IC/MO	West Mesa 1 115 kV IC/MO	West Mesa 2 115 kV IC/MO
Pre-Project	0/7	0/1	0/2
Post-Project	0/7	0/1	0/2

3 ER Interconnection Analysis

The Interconnection Facilities required for ER interconnection would be as shown in Figure 1. The optional Interconnection Facilities shown in Figure 3 would also provide for ER interconnection service. The results of the NR reactive power and short circuit analyses (see Sections 2.1 and 2.3) are applicable to ER interconnection.

Assuming that the Project generation displaces generation at the existing PEGS generating station, the results from the powerflow analysis (Table 9) show that the full output of the Project could be interconnected to at the proposed POI without network upgrades, provided that the Interconnection Facilities are constructed.

Table 9. Powerflow Results for Ambrosia – West Mesa 230 kV N-1 Contingency (Energy Resource Analysis)

Line Section	Rating Amps	Peak Load		60% Load	
		Pre-Proj	Post-Proj	Pre-Proj	Post-Proj
BLUEWATR 115.00-GRANTS_T 115.00 ck=1	497	0.944		0.925	
MARQUEZT 115.00-UNSER 115.00 ck=1	668	0.974	0.974	0.997	0.999
MILAN_TP 115.00-GRANTS_T 115.00 ck=1	497		0.981		0.963
MKCOWIND115.00-MARQUEZT 115.00 ck=1	668	0.982	0.982	1.005	1.007

Several N-2 contingencies also showed pre-existing and Project-related overloads. It is assumed that these pre-existing and project-related overload conditions can be addressed by generation tripping.

4 Cost and Schedule for Upgrades

4.1 NR Interconnection

4.1.1 Main Interconnection Plan

For the main alternative with the POI at Milan Station (Figure 1), the mitigation plan would be to reconductor the Milan Tap-Grants Tap 115 kV line section and install a sectionalizing breaker at Grants Tap. Removal of the remaining overload on the KM line requires reconductoring from MCOWIND to West Mesa.

The cost estimate for the main alternative would be $3,000,000 for the Milan substation at the POI (3 breakers) plus $1,000,000 for a sectionalizing breaker at Grants Tap and $150,000/mile for reconductoring Milan Tap-Grants Tap 115 kV line section (8.7 miles) and the Mkcowind--West Mesa #1 115 kV line (45.6 miles).

Table 8 – Cost and Construction Time Estimates (Main Interconnection Plan)

Item	Cost Estimate	Construction Time Estimate
Milan Station	$3,000,000	18 months
KM Line Upgrade	$6,840,000	18 months
BW Line Upgrade	$1,305,000	
Sectionalizing Breaker at Grants Tap	$1,000,000	12 months
TOTAL COST	$12,145,000	

4.1.2 Optional Interconnection Plan

For the optional interconnection plan (Figure 3) studied in Section 2.4, The Project's point of interconnection (POI) with PNM would change to Grants Tap. This relieves the overload on the Milan Tap-Grants Tap 115 kV line section, and slightly alleviates the overload on the Mkcowind-Marquez-Unser 115 kV line sections. However, full removal of the remaining overload on the Mkcowind-Marquez-Unser 115 kV line would require reconductoring this line.

The cost estimate for the optional interconnection plan would be $4,000,000 for the Grants substation at the POI (4 breakers) and $150,000/mile for reconductoring the Mkcowind--West Mesa #1 115 kV line (45.6 miles).

Table 9 – Cost and Construction Time Estimates (Optional Interconnection Plan)

Item	Cost Estimate	Construction Time Estimate
Grants Station	$4,000,000	18 months
KM Line Upgrade	$6,840,000	18 months
TOTAL COST	$10,840,000	

The above estimates do not include the additional cost of increasing the Project's 115 kV interconnecting line from 1 mile (in the main plan) to 10 miles (in the optional plan).

4.2 ER Interconnection

The analysis shows that, with respect to N-1 conditions, no Network Upgrades beyond Interconnection Facilities are required to interconnect the Project as an ER. The Interconnection Facilities required for ER interconnection would be as shown in Figure 1, which has an estimated cost of $3,000,000. Alternatively, the optional Interconnection Facilities shown in Figure 3 would also provide for ER interconnection service, which has an estimated cost of $4,000,000. The construction time estimate in either case would be 18 months.

5 Conclusions

An initial NR interconnection and ER interconnection feasibility analysis of the Milan Biomass – PV project has been conducted using the GE-PSLF program. This analysis has included a power factor analysis and a contingency powerflow analysis.

The conclusion from the power factor analysis is that the Project meets PNM's power factor requirements at the POI, provided that the biomass generator's reactive capabilities are as stated in the Milan application, i.e. 0.90 pf lagging (overexcited) to 0.95 pf leading (underexcited). This assumes that the PV portion of the project operates at unity power factor. However, based on the machine capability curve provided with the interconnection application, the core end heating limit may restrict the machine's leading (underexcited) power factor range to a lower level. This discrepancy should be reconciled in follow-up interconnection studies for the Project.

For the NR interconnection study, the conclusion from the contingency powerflow analysis is that overloads caused by the Project or worsened by the Project occur on a portion of the Gulf Minerals – West Mesa 115 kV (KM) line for N-1 and N-2 contingencies involving the West Mesa – Ambrosia 230 kV (WA) line. This overload can be addressed by re-conductoring the KM line from the proposed McKinley County station to West Mesa station (approximately 25 miles). An overload of the Bluewater – West Mesa 115 kV (BW) line from the proposed Milan station to Grants Tap (approximately 9 miles) was also identified for N-1 and N-2 contingencies involving the WA line. This overload can be addressed by reconductoring the BW line from the proposed Milan station to Grants Tap (approximately 10 miles), and installing a 115 kV sectionalizing breaker at Grants Tap. Further analysis showed that interconnecting the Project at Grants Tap would remove the overload of the Milan Station – Grants Tap 115 kV line segment, but would not alleviate the Project-related overload on the KM line.

The short circuit analysis showed no impacts to existing breakers in the Project area.

For the ER analysis, it was concluded that, with respect to N-1 conditions, the full output of the Project could be interconnected as an ER without network upgrades, provided that Interconnection Facilities are constructed.

Neither NR nor ER interconnection service conveys transmission service. Additional Network Upgrades within and outside the PNM transmission system may be required for delivery service. The extent of the additional Network Upgrades that would be required depends on the timing of the transmission service request, the type of delivery service requested, and the specific Point of Delivery, if applicable.

All the results discussed in this report are subject to further review in the System Impact Study.

References

[1] Facility Connection Requirements FAC-001- R2.1.3 Voltage Level and MW/MVAR Capacity or Demand.

[2] Attachment J-1, Request for Interconnection of Generation with the Public Service Company of New Mexico Transmission System, dated November 13, 2007. File milan-application.pdf.

[3] PNM Study Criteria and Guidelines, dated March 4, 2008. File PNM_Study_Criteria_and_Guidelines_03-04-08.pdf.

Appendix 1
Powerflow Diagrams:
Main Interconnection Plan

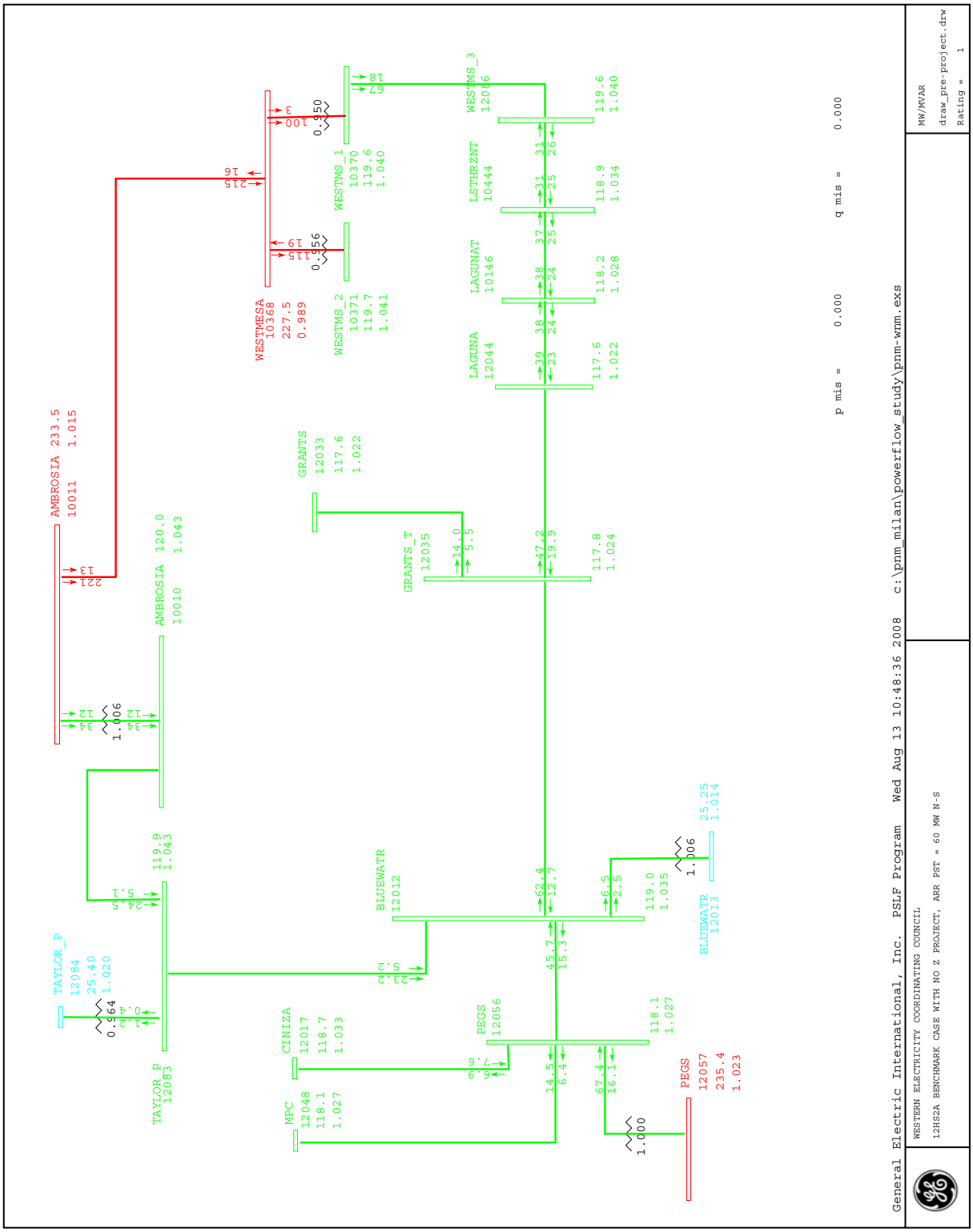
General Electric International, Inc. PSLF Program Wed Aug 13 10:48:36 2008 c:\pnm_milan\powerflow_study\pnm-wnm.exs
WESTERN ELECTRICITY COORDINATING COUNCIL
12HS2A BENCHMARK CASE WITH NO Z PROJECT, ARR PST = 60 MW N-S
MW/MVAR
draw_pre-project.drw
Rating = 1
p mis = 0.000
q mis = 0.000
AMBROSIA 233.5
10011 1.015
AMBROSIA 120.0
10010 1.043
TAYLOR_P
12084
25.40
1.020
TAYLOR_P
12083
119.9
1.043
WESTMESA
10368
227.5
0.989
WESTMS_1
10370
119.6
1.040
WESTMS_2
10371
119.7
1.041
WESTMS_3
12086
119.6
1.040
LSTHRZNT
10444
118.9
1.034
LAGUNAT
10146
118.2
1.028
LAGUNA
12044
117.6
1.022
GRANTS
12033
117.6
1.022
GRANTS_T
12035
117.8
1.024
BLUEWATR
12012
119.0
1.035
BLUEWATR
12013
25.25
1.014
CINIZA
12017
118.7
1.033
MPC
12048
118.1
1.027
PEGS
12056
118.1
1.027
PEGS
12057
235.4
1.023

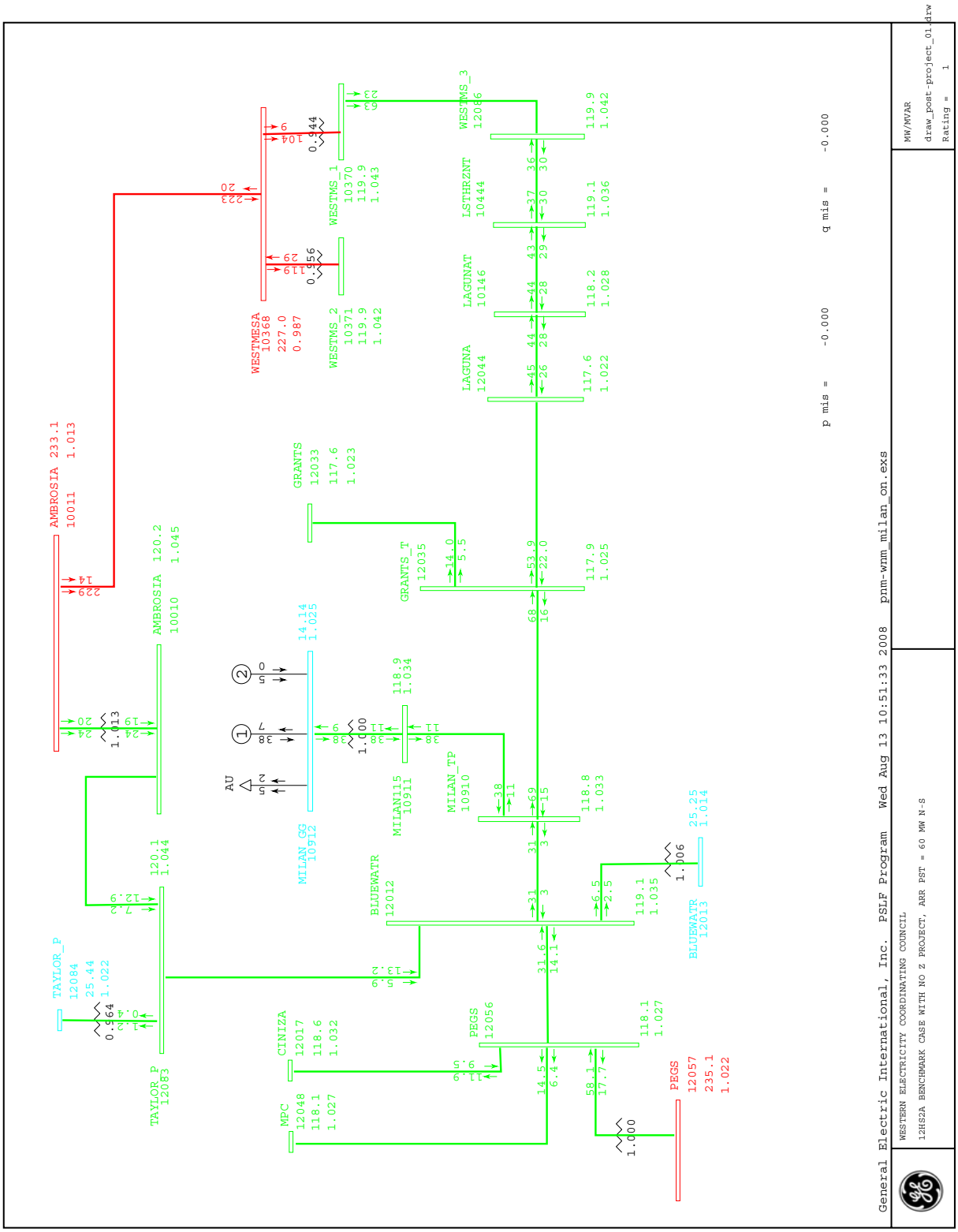
General Electric International, Inc. PSLF Program Wed Aug 13 10:51:33 2008 pnm-wnm_milan_on.exs
WESTERN ELECTRICITY COORDINATING COUNCIL
12HS2A BENCHMARK CASE WITH NO Z PROJECT, ARR PST = 60 MW N-S
MW/MVAR
draw_post-project_01.drw
Rating = 1
p mis = -0.000 q mis = -0.000
AMBROSIA 233.1 1.013
10011
AMBROSIA 120.2 1.045
10010
TAYLOR_P 12084 25.44 1.022
TAYLOR_P 120.1 1.044
12083
WESTMESA 10368 227.0 0.987
WESTMS_1 10370 119.9 1.043
WESTMS_2 10371 119.9 1.042
WESTMS_3 12086
LSTHRZNT 10444
LAGUNAT 10146
LAGUNA 12044
GRANTS 12033 117.6 1.023
GRANTS_T 12035
MILAN_GG 10912 14.14 1.025
MILAN115 10911 118.9 1.034
MILAN_TP 10910
BLUEWATR 12012
BLUEWATR 12013 25.25 1.014
CINIZA 12017 118.6 1.032
MPC 12048 118.1 1.027
PEGS 12056
PEGS 12057 235.1 1.022
AU

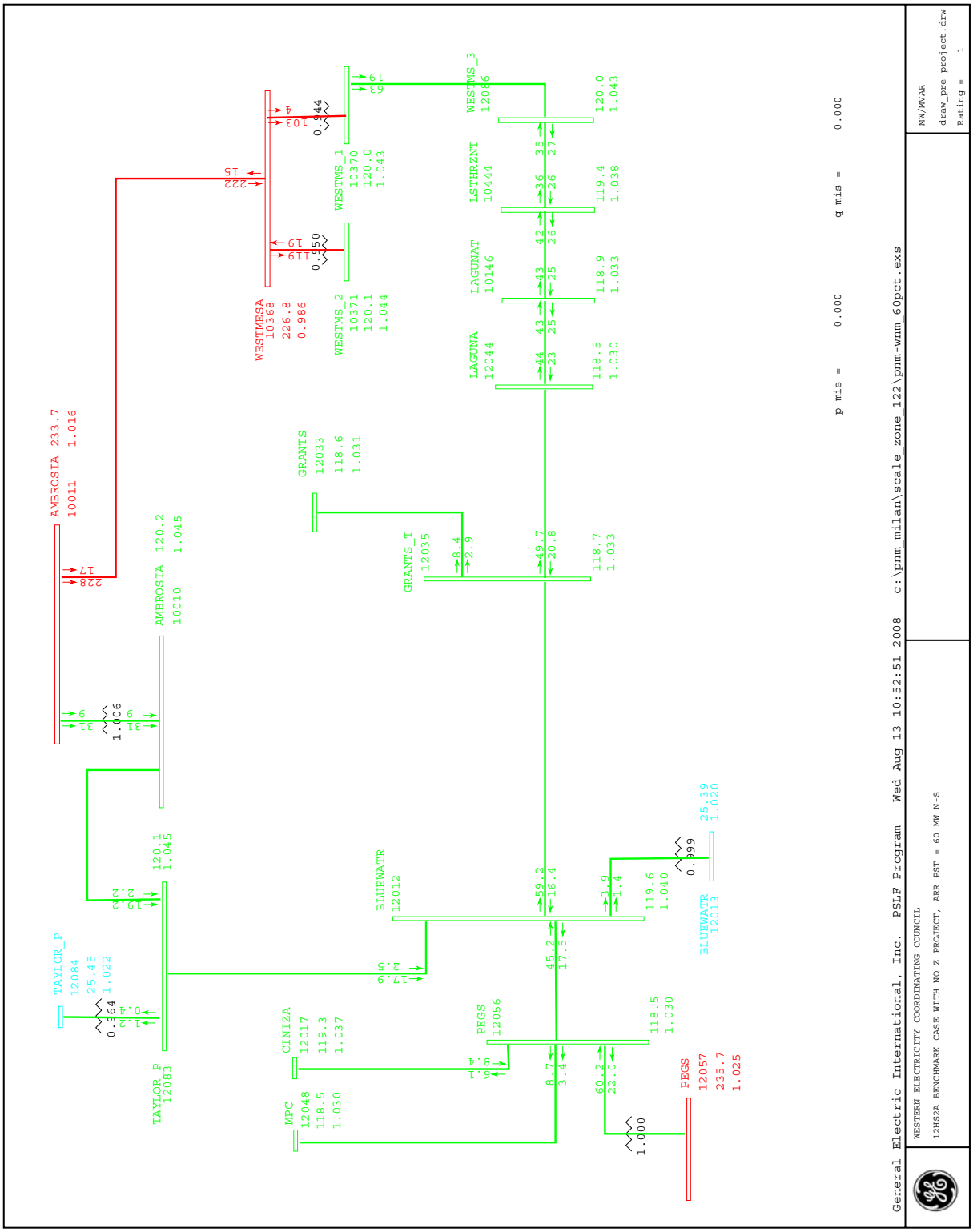
General Electric International, Inc. PSLF Program Wed Aug 13 10:52:51 2008 c:\pnm_milan\scale_zone_122\pnm-wnm_60pct.exs
WESTERN ELECTRICITY COORDINATING COUNCIL
12HS2A BENCHMARK CASE WITH NO Z PROJECT, ARR PST = 60 MW N-S
p mis = 0.000 q mis = 0.000
MW/MVAR
draw_pre-project.drw
Rating = 1
AMBROSIA 233.7
10011 1.016
AMBROSIA 120.2
10010 1.045
TAYLOR_P
12084
25.45
1.022
TAYLOR_P
12083
120.1
1.045
WESTMESA
10368
226.8
0.986
WESTMS_1
10370
120.0
1.043
WESTMS_2
10371
120.1
1.044
WESTMS_3
12086
120.0
1.043
LSTHRZNT
10444
119.4
1.038
LAGUNAT
10146
118.9
1.033
LAGUNA
12044
118.5
1.030
GRANTS
12033
118.6
1.031
GRANTS_T
12035
118.7
1.033
BLUEWATR
12012
119.6
1.040
BLUEWATR
12013
25.39
1.020
PEGS
12056
118.5
1.030
PEGS
12057
235.7
1.025
CINIZA
12017
119.3
1.037
MPC
12048
118.5
1.030

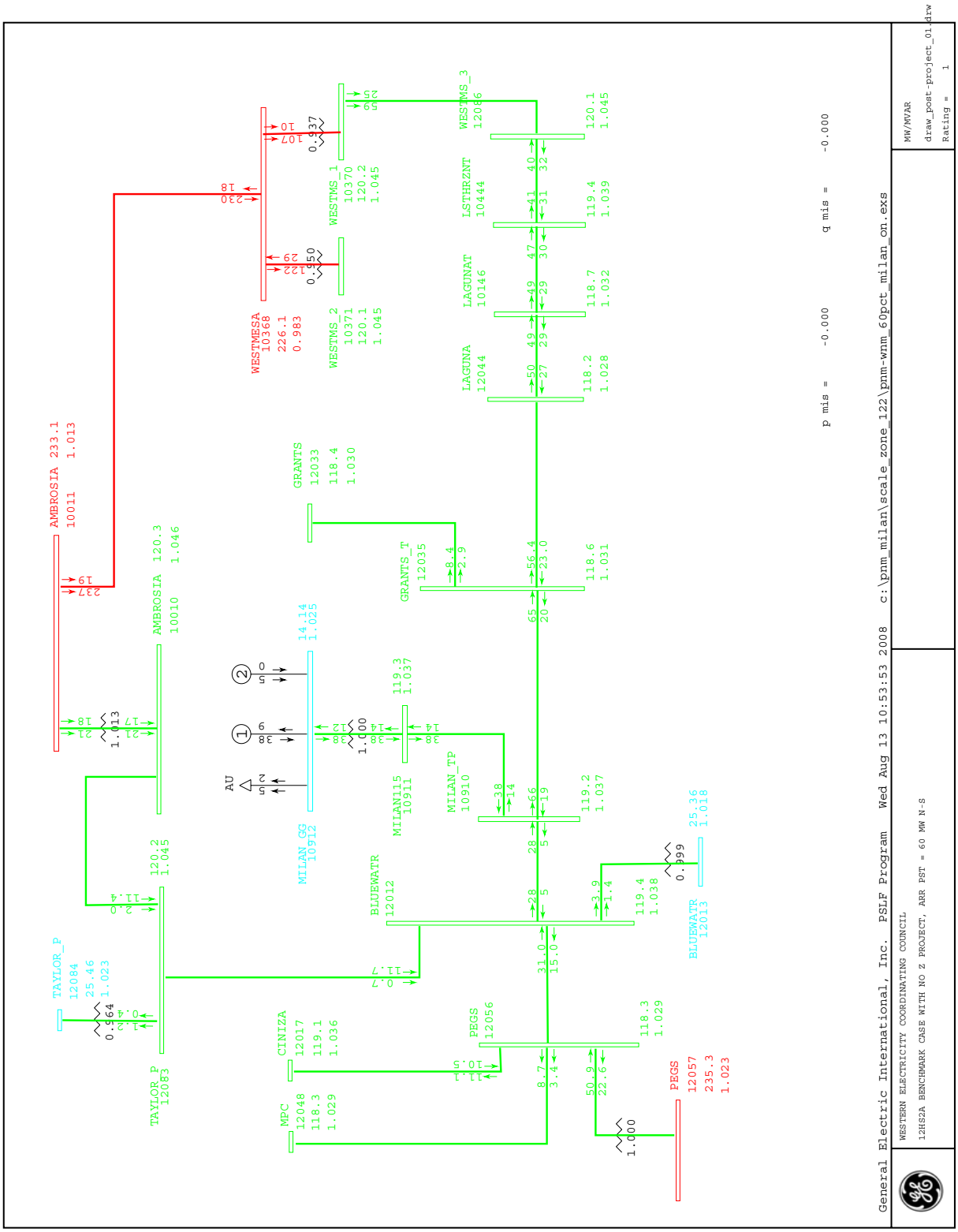
General Electric International, Inc. PSLF Program Wed Aug 13 10:53:53 2008 c:\pnm_milan\scale_zone_122\pnm-wnm_60pct_milan_on.exs
WESTERN ELECTRICITY COORDINATING COUNCIL
12HS2A BENCHMARK CASE WITH NO Z PROJECT, ARR PST = 60 MW N-S
MW/MVAR
draw_post-project_01.drw
Rating = 1
p mis = -0.000 q mis = -0.000
AMBROSIA 233.1
10011 1.013
AMBROSIA 120.3
10010 1.046
TAYLOR_P
12084
25.46
1.023
TAYLOR_P
12083
120.2
1.045
MILAN_GG
10912
14.14
1.025
GRANTS
12033
118.4
1.030
GRANTS_T
12035
BLUEWATR
12012
MILAN115
10911
MILAN_TP
10910
119.3
1.037
119.2
1.037
CINIZA
12017
119.1
1.036
MPC
12048
118.3
1.029
PEGS
12056
118.3
1.029
PEGS
12057
235.3
1.023
BLUEWATR
12013
25.36
1.018
119.4
1.038
WESTMESA
10368
226.1
0.983
WESTMS_1
10370
120.2
1.045
WESTMS_2
10371
120.1
1.045
WESTMS_3
12086
LAGUNA
12044
118.2
1.028
LAGUNAT
10146
118.7
1.032
LSTHRZNT
10444
119.4
1.039
120.1
1.045
118.6
1.031
AU

Appendix 2
Powerflow Diagrams:
Optional Interconnection Plan

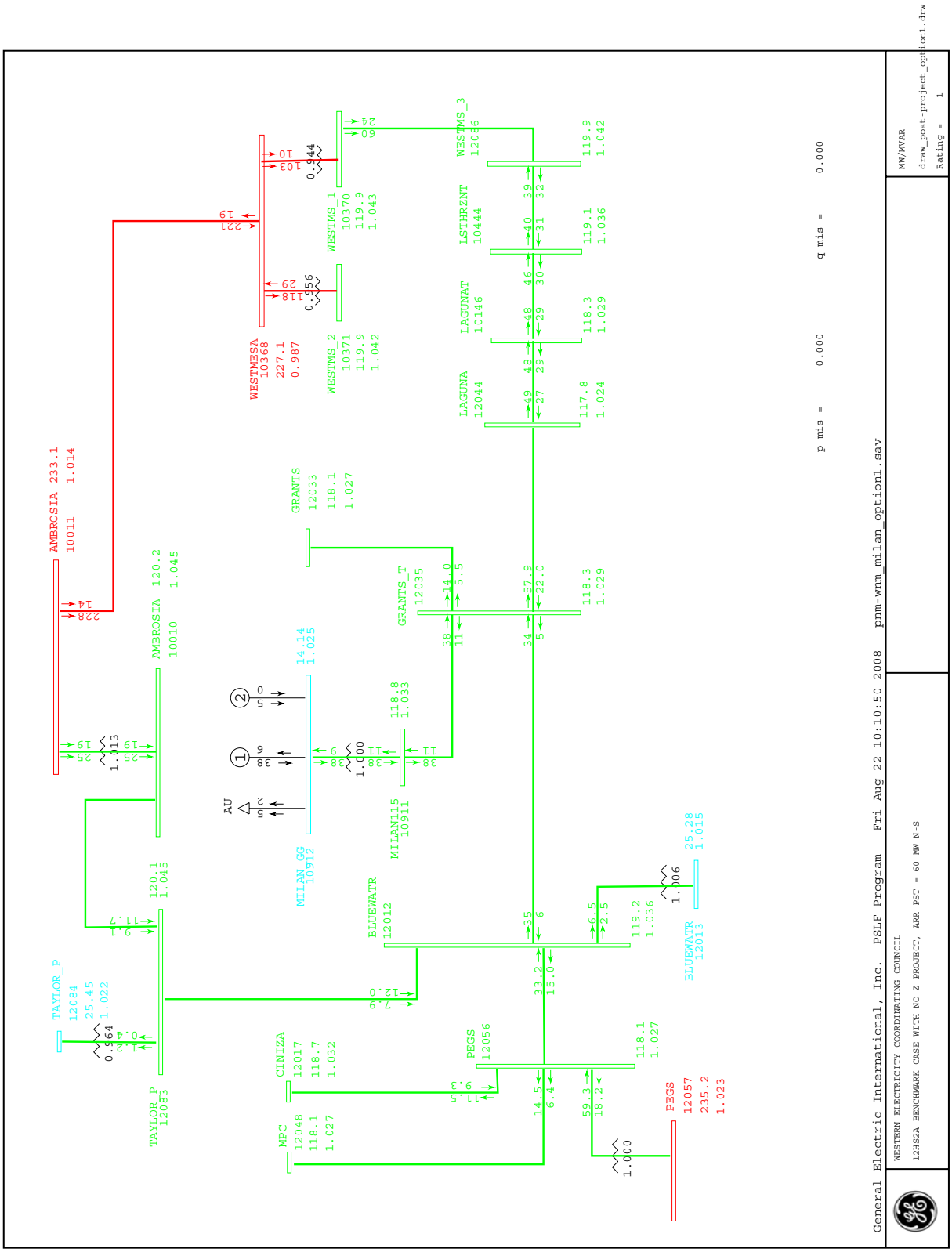
General Electric International, Inc. PSLF Program Fri Aug 22 10:10:50 2008 pnm-wnm_milan_option1.sav
WESTERN ELECTRICITY COORDINATING COUNCIL
12HS2A BENCHMARK CASE WITH NO Z PROJECT, ARR PST = 60 MW N-S
MW/MVAR
draw_post-project_option1.drw
Rating = 1
p mis = 0.000
q mis = 0.000
AMBROSIA 233.1 1.014
10011
AMBROSIA 120.2 1.045
10010
TAYLOR_P 12084 25.45 1.022
TAYLOR_P 120.1 1.045
12083
WESTMESA 10368 227.1 0.987
WESTMS_1 10370 119.9 1.043
WESTMS_2 10371 119.9 1.042
WESTMS_3 12086
LSTHRZNT 10444
LAGUNAT 10146
LAGUNA 12044
GRANTS 12033 118.1 1.027
GRANTS_T 12035
MILAN_GG 10912 14.14 1.025
MILAN115 10911 118.8 1.033
BLUEWATR 12012
BLUEWATR 12013 25.28 1.015
PEGS 12056
PEGS 12057 235.2 1.023
CINIZA 12017 118.7 1.032
MPC 12048 118.1 1.027
AU

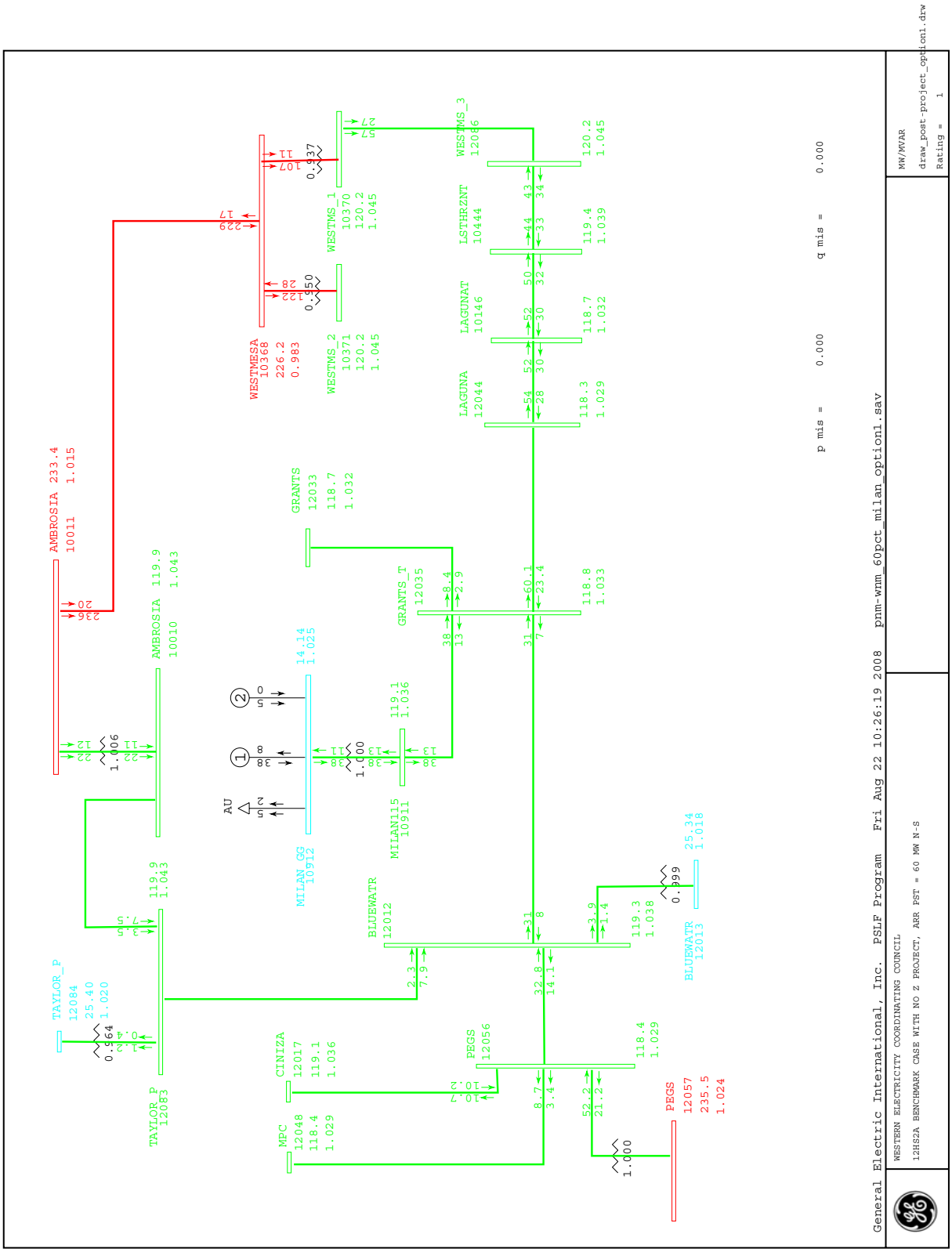
General Electric International, Inc. PSLF Program Fri Aug 22 10:26:19 2008 pnm-wnm_60pct_milan_option1.sav
WESTERN ELECTRICITY COORDINATING COUNCIL
12HS2A BENCHMARK CASE WITH NO Z PROJECT, ARR PST = 60 MW N-S
MW/MVAR
draw_post-project_option1.drw
Rating = 1
p mis = 0.000
q mis = 0.000
AMBROSIA 233.4
10011 1.015
AMBROSIA 119.9
10010 1.043
TAYLOR_P
12084
25.40
1.020
TAYLOR_P
12083
119.9
1.043
MILAN_GG
10912
14.14
1.025
MILAN115
10911
119.1
1.036
GRANTS
12033
118.7
1.032
GRANTS_T
12035
118.8
1.033
WESTMESA
10368
226.2
0.983
WESTMS_1
10370
120.2
1.045
WESTMS_2
10371
120.2
1.045
WESTMS_3
12086
120.2
1.045
LSTHRZNT
10444
119.4
1.039
LAGUNAT
10146
118.7
1.032
LAGUNA
12044
118.3
1.029
BLUEWATR
12012
119.3
1.038
BLUEWATR
12013
25.34
1.018
PEGS
12056
118.4
1.029
PEGS
12057
235.5
1.024
CINIZA
12017
119.1
1.036
MPC
12048
118.4
1.029
AU

Appendix 3
Powerflow Results:
Main Interconnection Plan

Post-Contingency Branch Overloads

Contingency	Monitored Element	Rating	Peak Load Pre-Proj	Peak Load Post-Proj	60% Load Pre-Proj	60% Load Post-Proj
FOURCORN-WESTMESA 345 kV	MKCOWIND 115.00-MARQUEZT 115.00 ck=1	668 Amps				0.908
FOURCORN-WESTMESA 345 kV	NORTON_2 115.00-HERNANDZ 115.00 ck=1	879 Amps	0.974	0.96	0.985	0.973
FOURCORN-WESTMESA 345 kV	OJO 115.00-HERNANDZ 115.00 ck=1	904 Amps	0.927	0.916	0.936	0.927
FOURCORN-WESTMESA 345 kV	OJO 345.00-OJO 115.00 ck=1	180 MVA	0.942	0.932	0.95	0.941
FOURCORN-WESTMESA 345 kV	PECOS 46.00-CANYON 46.00 ck=1	515 Amps	0.913	0.909	0.914	0.912
FOURCORN-WESTMESA 345 kV	SAN_JUAN 345.00-RIOPUERC 345.00 ck=1	2000 Amps	0.953	0.939	0.963	0.952
FOURCORN-WESTMESA 345 kV	SAN_JUAN 345.00-SJUAN_G1 22.00 ck=1	357 MVA	0.93		0.93	
FOURCORN-WESTMESA 345 kV	SAN_JUAN 345.00-SJUAN_G2 24.00 ck=1	357 MVA	0.92	0.915	0.921	0.918
FOURCORN-WESTMESA 345 kV	SAN_JUAN 345.00-SJUAN_G4 22.00 ck=1	585 MVA	0.966	0.962	0.972	0.971
FOURCORN-WESTMESA 345 kV	ZIA_2 46.00-PECOS 46.00 ck=1	515 Amps	0.983	0.978	0.984	0.982
PEGS-AMBROSIA 230 kV	BLUEWATR 115.00-PEGS 115.00 ck=1	728 Amps	1.092	1.039	1.119	1.067
SANJUAN-RIOPUERCO 345 kV	CANYON 46.00-FT_MARCY 46.00 ck=1	515 Amps	0.921	0.913	0.926	0.92
SANJUAN-RIOPUERCO 345 kV	FOURCORN 345.00-WESTMESA 345.00 ck=1	2000 Amps	0.944	0.93	0.957	0.944
SANJUAN-RIOPUERCO 345 kV	MARQUEZT 115.00-UNSER 115.00 ck=1	668 Amps	0.912	0.931	0.933	0.954
SANJUAN-RIOPUERCO 345 kV	MILAN_TP 115.00-GRANTS_T 115.00 ck=1	497 Amps		0.941		0.918
SANJUAN-RIOPUERCO 345 kV	MKCOWIND 115.00-MARQUEZT 115.00 ck=1	668 Amps	0.92	0.939	0.941	0.962
SANJUAN-RIOPUERCO 345 kV	NORTON_2 115.00-HERNANDZ 115.00 ck=1	879 Amps			0.91	
SANJUAN-RIOPUERCO 345 kV	PECOS 46.00-CANYON 46.00 ck=1	515 Amps	0.944	0.936	0.949	0.943
SANJUAN-RIOPUERCO 345 kV	REEVES_2 115.00-REEVE_G3 13.80 ck=1	85 MVA	0.985	0.966	0.985	0.985
SANJUAN-RIOPUERCO 345 kV	SAN_JUAN 345.00-SJUAN_G1 22.00 ck=1	357 MVA	0.922		0.923	
SANJUAN-RIOPUERCO 345 kV	SAN_JUAN 345.00-SJUAN_G2 24.00 ck=1	357 MVA	0.911	0.907	0.913	0.909
SANJUAN-RIOPUERCO 345 kV	SAN_JUAN 345.00-SJUAN_G4 22.00 ck=1	585 MVA	0.959	0.956	0.965	0.964
SANJUAN-RIOPUERCO 345 kV	SANDIA_2 46.00-ID-TA 46.00 ck=1	389 Amps	0.921	0.922	0.928	0.929
SANJUAN-RIOPUERCO 345 kV	ZIA_2 46.00-PECOS 46.00 ck=1	515 Amps	1.016	1.007	1.021	1.015
WESTMESA-AMBROSIA 230 kV	BLUEWATR 115.00-GRANTS_T 115.00 ck=1	497 Amps	0.944		0.924	
WESTMESA-AMBROSIA 230 kV	LAGUNA 115.00-GRANTS_T 115.00 ck=1	497 Amps	0.822	0.901	0.852	0.932
WESTMESA-AMBROSIA 230 kV	MARQUEZT 115.00-UNSER 115.00 ck=1	668 Amps	0.974	1.007	0.996	1.032
WESTMESA-AMBROSIA 230 kV	MILAN_TP 115.00-GRANTS_T 115.00 ck=1	497 Amps	0.944	1.024	0.924	1.005
WESTMESA-AMBROSIA 230 kV	MKCOWIND 115.00-MARQUEZT 115.00 ck=1	668 Amps	0.982	1.016	1.004	1.04
WESTMESA-AMBROSIA 230 kV	UNSER 115.00-WESTMS_1 115.00 ck=1	668 Amps			0.87	0.905
WESTMS-AMBRO-BIST 230 kV	BLUEWATR 115.00-GRANTS_T 115.00 ck=1	497 Amps	0.944		0.936	
WESTMS-AMBRO-BIST 230 kV	LAGUNA 115.00-GRANTS_T 115.00 ck=1	497 Amps	0.822	0.929	0.881	0.972
WESTMS-AMBRO-BIST 230 kV	LAGUNA 115.00-LAGUNAT 115.00 ck=1	497 Amps			0.827	0.935
WESTMS-AMBRO-BIST 230 kV	LAGUNAT 115.00-LSTHRZNT 115.00 ck=1	497 Amps			0.821	0.929
WESTMS-AMBRO-BIST 230 kV	MARQUEZT 115.00-UNSER 115.00 ck=1	668 Amps	0.974	1.033	1.007	1.067
WESTMS-AMBRO-BIST 230 kV	MILAN_TP 115.00-GRANTS_T 115.00 ck=1	497 Amps	0.944	1.053	0.936	1.046
WESTMS-AMBRO-BIST 230 kV	MKCOWIND 115.00-MARQUEZT 115.00 ck=1	668 Amps	0.982	1.041	1.015	1.075
WESTMS-AMBRO-BIST 230 kV	UNSER 115.00-WESTMS_1 115.00 ck=1	668 Amps	0.845	0.904	0.881	0.942
WESTMS-AMBRO-PEGS 230 kV	BLUEWATR 115.00-GRANTS_T 115.00 ck=1	497 Amps	1.012		0.998	
WESTMS-AMBRO-PEGS 230 kV	BLUEWATR 115.00-PEGS 115.00 ck=1	728 Amps	0.984	0.928	1.009	0.953
WESTMS-AMBRO-PEGS 230 kV	LAGUNA 115.00-GRANTS_T 115.00 ck=1	497 Amps	0.891	0.974	0.924	1.009
WESTMS-AMBRO-PEGS 230 kV	LAGUNA 115.00-LAGUNAT 115.00 ck=1	497 Amps	0.835	0.917	0.888	0.972
WESTMS-AMBRO-PEGS 230 kV	LAGUNAT 115.00-LSTHRZNT 115.00 ck=1	497 Amps	0.828	0.911	0.882	0.966
WESTMS-AMBRO-PEGS 230 kV	LSTHRZNT 115.00-WESTMS_3 115.00 ck=1	497 Amps			0.83	0.914
WESTMS-AMBRO-PEGS 230 kV	MARQUEZT 115.00-UNSER 115.00 ck=1	668 Amps	0.95	0.983	0.972	1.006
WESTMS-AMBRO-PEGS 230 kV	MILAN_TP 115.00-GRANTS_T 115.00 ck=1	497 Amps	1.012	1.098	0.998	1.082
WESTMS-AMBRO-PEGS 230 kV	MKCOWIND 115.00-MARQUEZT 115.00 ck=1	668 Amps	0.958	0.991	0.981	1.014

Post-Contingency Low Voltage Violations

Bus	kV	Contingency	Criteria	Peak Load Pre-Proj	Peak Load Post-Proj	60% Load Pre-Proj	60% Load Post-Proj
SUNSET_N	13.8	SANJUAN-RIOPUERCO 345 kV	0.95	0.945	0.945	0.945	0.945
BECKNER	12.5	SANJUAN-RIOPUERCO 345 kV	0.925			0.923	0.928
BEL_AIR	12.5	SANJUAN-RIOPUERCO 345 kV	0.925	0.924	0.929	0.919	0.923
CANYON	12.5	SANJUAN-RIOPUERCO 345 kV	0.925	0.916	0.924	0.912	0.917
CAPITOL	4.16	SANJUAN-RIOPUERCO 345 kV	0.925	0.908	0.916	0.903	0.909
EASTRDGE	12.5	SANJUAN-RIOPUERCO 345 kV	0.925			0.923	0.928
EMBUDO	12.5	SANJUAN-RIOPUERCO 345 kV	0.925			0.923	0.927
FT_MARCY	12.5	SANJUAN-RIOPUERCO 345 kV	0.925	0.91	0.918	0.905	0.911
HALONA	4.16	SANJUAN-RIOPUERCO 345 kV	0.925	0.905	0.913	0.9	0.906
HICKOX	4.16	SANJUAN-RIOPUERCO 345 kV	0.925	0.911	0.919	0.906	0.912
INEZ	12.5	SANJUAN-RIOPUERCO 345 kV	0.925			0.922	0.927
JEFFERSN	4.16	SANJUAN-RIOPUERCO 345 kV	0.925			0.925	0.93
LEYENDKR	12.5	SANJUAN-RIOPUERCO 345 kV	0.925			0.925	0.93
LOMAS	12.5	SANJUAN-RIOPUERCO 345 kV	0.925	0.924	0.927	0.919	0.924
LVGT	13.8	SANJUAN-RIOPUERCO 345 kV	0.925	0.918	0.923	0.914	0.918
M_PLAZA	12.5	SANJUAN-RIOPUERCO 345 kV	0.925			0.921	0.927
MANHTTEN	12.5	SANJUAN-RIOPUERCO 345 kV	0.925	0.903	0.911	0.898	0.904
MONTANO	12.5	SANJUAN-RIOPUERCO 345 kV	0.925			0.922	0.927
MORRIS	12.5	SANJUAN-RIOPUERCO 345 kV	0.925			0.922	0.927
NORTH_1	12.5	SANJUAN-RIOPUERCO 345 kV	0.925			0.924	0.929
ORTIZ	12.5	SANJUAN-RIOPUERCO 345 kV	0.925	0.923	0.928	0.917	0.922
PARADIS2	12.5	SANJUAN-RIOPUERCO 345 kV	0.925			0.924	0.929
PECOS	12.5	SANJUAN-RIOPUERCO 345 kV	0.925	0.919	0.926	0.915	0.92
PERALTA	12.5	SANJUAN-RIOPUERCO 345 kV	0.925	0.908	0.916	0.903	0.909
PRAGER	12.5	SANJUAN-RIOPUERCO 345 kV	0.925			0.922	0.927
PRINCESS	12.5	SANJUAN-RIOPUERCO 345 kV	0.925	0.923		0.918	0.923
S.ANTON1	12.5	SANJUAN-RIOPUERCO 345 kV	0.925	0.924	0.924	0.918	0.916
S.ANTON2	12.5	SANJUAN-RIOPUERCO 345 kV	0.925	0.918	0.917	0.912	0.91
SANDIA	345	SANJUAN-RIOPUERCO 345 kV	0.925	0.917	0.923	0.913	0.916
SANPEDRO	12.5	SANJUAN-RIOPUERCO 345 kV	0.925			0.92	0.925
SPACHCO2	12.5	SANJUAN-RIOPUERCO 345 kV	0.925	0.925	0.931	0.921	0.925
THOMAS	12.5	SANJUAN-RIOPUERCO 345 kV	0.925			0.923	0.928
UNSER	12.5	SANJUAN-RIOPUERCO 345 kV	0.925			0.924	0.93
WAYNE 2	12.5	SANJUAN-RIOPUERCO 345 kV	0.925			0.924	0.929
WESTMESA	230	SANJUAN-RIOPUERCO 345 kV	0.925	0.923	0.928	0.918	0.92
WESTMESA	345	SANJUAN-RIOPUERCO 345 kV	0.925			0.923	0.927

Post-Contingency High Voltage Violations

Bus	kV	Contingency	Criteria	Peak Load Pre-Proj	Peak Load Post-Proj	60% Load Pre-Proj	60% Load Post-Proj
ALLISON#	115	PEGS-YAHTAHEY 115 kV	1.05	1.05	1.05		
ALLISONT	115	PEGS-YAHTAHEY 115 kV	1.05	1.051	1.051		
AMBROSIA	115	BLUEWATR-AMBROSIA 115 kV	1.05	1.045	1.05		
AMBROSIA	115	WESTMESA-AMBROSIA 230 kV	1.05	1.054	1.054	1.057	1.056
AMBROSIA	115	WESTMS-AMBRO-BIST 230 kV	1.05	1.05	1.05	1.053	1.052
KERMAC	115	BLUEWATR-AMBROSIA 115 kV	1.05	1.045	1.05		
KERMAC	115	WESTMESA-AMBROSIA 230 kV	1.05	1.053	1.054	1.056	1.056
KERMAC	115	WESTMS-AMBRO-BIST 230 kV	1.05			1.053	1.052
KERMACT	115	BLUEWATR-AMBROSIA 115 kV	1.05	1.045	1.05		
KERMACT	115	WESTMESA-AMBROSIA 230 kV	1.05	1.053	1.054	1.056	1.056
KERMACT	115	WESTMS-AMBRO-BIST 230 kV	1.05			1.053	1.052
RANCHERS	115	WESTMESA-AMBROSIA 230 kV	1.05			1.051	1.051
SJUAN_G3	22	FOURCORN-WESTMESA 345 kV	1.05	1.052	1.05	1.052	1.051
SJUAN_G4	22	FOURCORN-WESTMESA 345 kV	1.05	1.051		1.051	1.05
TAYLOR_P	115	WESTMESA-AMBROSIA 230 kV	1.05	1.053	1.053	1.056	1.055
TAYLOR_P	115	WESTMS-AMBRO-BIST 230 kV	1.05			1.053	1.052
UNITED	115	BLUEWATR-AMBROSIA 115 kV	1.05	1.045	1.05		
UNITED	115	WESTMESA-AMBROSIA 230 kV	1.05	1.053	1.054	1.056	1.056
UNITED	115	WESTMS-AMBRO-BIST 230 kV	1.05			1.053	1.052
YAHTAHEY	115	PEGS-YAHTAHEY 115 kV	1.05	1.056	1.056	1.05	1.05

Post-Contingency Voltage Drop Violations

Bus	kV	Contingency	Criteria	Peak Load Pre-Proj	Peak Load Post-Proj	60% Load Pre-Proj	60% Load Post-Proj
12ST_TAP	46	SANJUAN-RIOPUERCO 345 kV	0.06	0.072	0.067	0.076	0.071
ALCAZAR	12.5	SANJUAN-RIOPUERCO 345 kV	0.06	0.066	0.061	0.071	0.066
ALCAZAR	115	SANJUAN-RIOPUERCO 345 kV	0.06	0.065		0.069	0.064
ALGODONE	12.5	SANJUAN-RIOPUERCO 345 kV	0.06	0.063		0.067	0.063
ALGODONE	115	SANJUAN-RIOPUERCO 345 kV	0.06	0.062		0.066	0.062
ALIRE	12.5	SANJUAN-RIOPUERCO 345 kV	0.06	0.067	0.061	0.071	0.066
ALIRE_T	46	SANJUAN-RIOPUERCO 345 kV	0.06	0.064		0.068	0.064
AN_TAP	115	SANJUAN-RIOPUERCO 345 kV	0.06	0.061		0.065	0.061
ARNO	46	SANJUAN-RIOPUERCO 345 kV	0.06	0.06		0.064	
ARNO_1	12.5	SANJUAN-RIOPUERCO 345 kV	0.06	0.061		0.065	0.061
ARNO_2	12.5	SANJUAN-RIOPUERCO 345 kV	0.06	0.061		0.065	0.06
ARRIBA	12.5	SANJUAN-RIOPUERCO 345 kV	0.06	0.071	0.066	0.075	0.071
ARRIBA	115	SANJUAN-RIOPUERCO 345 kV	0.06	0.073	0.067	0.077	0.072
ARRIBA_T	115	SANJUAN-RIOPUERCO 345 kV	0.06	0.073	0.067	0.077	0.072
ASPEN	12.5	SANJUAN-RIOPUERCO 345 kV	0.06	0.061		0.066	0.061
ASPEN	115	SANJUAN-RIOPUERCO 345 kV	0.06	0.063		0.068	0.063
AVILA	12.5	SANJUAN-RIOPUERCO 345 kV	0.06	0.061		0.065	0.06
AVILA	115	SANJUAN-RIOPUERCO 345 kV	0.06	0.061		0.065	0.061
AVILA_T	115	SANJUAN-RIOPUERCO 345 kV	0.06	0.061		0.065	0.061
B-A	115	SANJUAN-RIOPUERCO 345 kV	0.06	0.063		0.067	0.062
B-A	345	SANJUAN-RIOPUERCO 345 kV	0.06			0.062	
BACA	12.5	SANJUAN-RIOPUERCO 345 kV	0.06	0.077	0.071	0.081	0.076
BACA	46	SANJUAN-RIOPUERCO 345 kV	0.06	0.072	0.067	0.076	0.071
BALL_PRK	4.16	SANJUAN-RIOPUERCO 345 kV	0.06			0.063	
BALL_PRK	46	SANJUAN-RIOPUERCO 345 kV	0.06			0.061	
BALLP_T	46	SANJUAN-RIOPUERCO 345 kV	0.06			0.061	
BECKNER	12.5	SANJUAN-RIOPUERCO 345 kV	0.06	0.067	0.061	0.071	0.066
BECKNER	115	SANJUAN-RIOPUERCO 345 kV	0.06	0.065		0.069	0.064
BEL_AIR	12.5	SANJUAN-RIOPUERCO 345 kV	0.06	0.065	0.06	0.07	0.065
BEL_AIR	115	SANJUAN-RIOPUERCO 345 kV	0.06	0.065	0.06	0.07	0.065
BELAIR_T	115	SANJUAN-RIOPUERCO 345 kV	0.06	0.065	0.06	0.07	0.065
BEV_WOOD	12.5	SANJUAN-RIOPUERCO 345 kV	0.06	0.065		0.069	0.064
BEV_WOOD	115	SANJUAN-RIOPUERCO 345 kV	0.06	0.065	0.06	0.07	0.065
BLACKWTR	345	SANJUAN-RIOPUERCO 345 kV	0.06	0.067		0.069	0.064
BLCKRA	12.5	SANJUAN-RIOPUERCO 345 kV	0.06	0.064		0.068	0.063
BLCKRA	115	SANJUAN-RIOPUERCO 345 kV	0.06	0.065		0.069	0.064
BLCKRA_T	115	SANJUAN-RIOPUERCO 345 kV	0.06	0.065		0.069	0.064
BROADWAY	4.16	SANJUAN-RIOPUERCO 345 kV	0.06	0.061		0.065	0.061
BROADWAY	46	SANJUAN-RIOPUERCO 345 kV	0.06			0.064	
BUCKMAN	12.5	SANJUAN-RIOPUERCO 345 kV	0.06			0.061	
BUCKMAN	115	SANJUAN-RIOPUERCO 345 kV	0.06			0.06	
BUFORD	24.9	SANJUAN-RIOPUERCO 345 kV	0.06			0.06	
CAMEL_TR	46	SANJUAN-RIOPUERCO 345 kV	0.06	0.064		0.068	0.064
CANYON	12.5	SANJUAN-RIOPUERCO 345 kV	0.06	0.079	0.072	0.083	0.078
CANYON	46	SANJUAN-RIOPUERCO 345 kV	0.06	0.077	0.071	0.082	0.077
CAPITOL	4.16	SANJUAN-RIOPUERCO 345 kV	0.06	0.085	0.078	0.09	0.084
CAPITOL	46	SANJUAN-RIOPUERCO 345 kV	0.06	0.08	0.073	0.085	0.079
CB108	115	SANJUAN-RIOPUERCO 345 kV	0.06	0.065		0.069	0.065
CB108A	115	SANJUAN-RIOPUERCO 345 kV	0.06	0.065		0.07	0.065

CDELRIO	12.5	SANJUAN-RIOPUERCO 345 kV	0.06			0.061	
CDELRIO	115	SANJUAN-RIOPUERCO 345 kV	0.06			0.063	
CENTRALP	12.5	SANJUAN-RIOPUERCO 345 kV	0.06			0.064	
CENTRALP	115	SANJUAN-RIOPUERCO 345 kV	0.06			0.063	
CG-1	115	SANJUAN-RIOPUERCO 345 kV	0.06	0.062		0.067	0.062
CLAREMNT	12.5	SANJUAN-RIOPUERCO 345 kV	0.06	0.061		0.065	0.061
CLAREMNT	115	SANJUAN-RIOPUERCO 345 kV	0.06	0.063		0.067	0.063
COCHITI	12.5	SANJUAN-RIOPUERCO 345 kV	0.06	0.067	0.062	0.071	0.067
COCHITI	46	SANJUAN-RIOPUERCO 345 kV	0.06	0.065		0.069	0.064
COLINAS	12.5	SANJUAN-RIOPUERCO 345 kV	0.06	0.066	0.061	0.07	0.065
COLINAS	115	SANJUAN-RIOPUERCO 345 kV	0.06	0.068	0.062	0.072	0.067
CORRALB	115	SANJUAN-RIOPUERCO 345 kV	0.06	0.065		0.07	0.065
COTTONWD	12.5	SANJUAN-RIOPUERCO 345 kV	0.06	0.065		0.069	0.064
COTTONWD	115	SANJUAN-RIOPUERCO 345 kV	0.06	0.065		0.069	0.064
COTTONWT	115	SANJUAN-RIOPUERCO 345 kV	0.06	0.065		0.069	0.064
CUCHILLA	4.16	SANJUAN-RIOPUERCO 345 kV	0.06	0.061		0.065	0.06
CUCHILLA	115	SANJUAN-RIOPUERCO 345 kV	0.06	0.063		0.067	0.063
DOWNTOWN	12.5	SANJUAN-RIOPUERCO 345 kV	0.06	0.061		0.065	0.061
DWNTOWN	115	SANJUAN-RIOPUERCO 345 kV	0.06	0.063		0.068	0.063
EAST_TAP	115	SANJUAN-RIOPUERCO 345 kV	0.06	0.063		0.068	0.063
EASTRDGE	12.5	SANJUAN-RIOPUERCO 345 kV	0.06	0.064		0.069	0.064
EASTRDGE	115	SANJUAN-RIOPUERCO 345 kV	0.06	0.063		0.068	0.063
EB-HW	115	SANJUAN-RIOPUERCO 345 kV	0.06	0.065		0.07	0.065
EB-TL	115	SANJUAN-RIOPUERCO 345 kV	0.06	0.063		0.068	0.063
ELDORAD#	115	SANJUAN-RIOPUERCO 345 kV	0.06	0.067	0.061	0.071	0.066
ELDORADO	12.5	SANJUAN-RIOPUERCO 345 kV	0.06	0.065	0.06	0.069	0.065
ELDRADOT	115	SANJUAN-RIOPUERCO 345 kV	0.06	0.067	0.061	0.071	0.066
EMBUDO	12.5	SANJUAN-RIOPUERCO 345 kV	0.06	0.062		0.067	0.062
EMBUDO	115	SANJUAN-RIOPUERCO 345 kV	0.06	0.063		0.067	0.063
ENCHNTED	12.5	SANJUAN-RIOPUERCO 345 kV	0.06	0.063		0.067	0.062
ENCHNTED	115	SANJUAN-RIOPUERCO 345 kV	0.06	0.064		0.068	0.064
FOURHILL	12.5	SANJUAN-RIOPUERCO 345 kV	0.06	0.064		0.069	0.064
FOURHILL	115	SANJUAN-RIOPUERCO 345 kV	0.06	0.064		0.068	0.064
FT_MARCY	12.5	SANJUAN-RIOPUERCO 345 kV	0.06	0.083	0.076	0.088	0.082
FT_MARCY	46	SANJUAN-RIOPUERCO 345 kV	0.06	0.079	0.073	0.084	0.079
GALLINAS	12.5	SANJUAN-RIOPUERCO 345 kV	0.06	0.071	0.066	0.075	0.071
GALLINAT	115	SANJUAN-RIOPUERCO 345 kV	0.06	0.073	0.067	0.077	0.072
GIRARD	12.5	SANJUAN-RIOPUERCO 345 kV	0.06	0.062		0.067	0.062
GIRARD	115	SANJUAN-RIOPUERCO 345 kV	0.06	0.062		0.067	0.062
GUADEAST	345	SANJUAN-RIOPUERCO 345 kV	0.06	0.063		0.066	0.061
GUADLUPE	345	SANJUAN-RIOPUERCO 345 kV	0.06	0.062		0.065	0.061
HALONA	4.16	SANJUAN-RIOPUERCO 345 kV	0.06	0.083	0.076	0.088	0.083
HAMILTON	115	SANJUAN-RIOPUERCO 345 kV	0.06	0.063		0.068	0.063
HAMLTN_1	12.5	SANJUAN-RIOPUERCO 345 kV	0.06	0.063		0.068	0.063
HAMLTN_2	12.5	SANJUAN-RIOPUERCO 345 kV	0.06	0.063		0.068	0.063
HAWKINS	12.5	SANJUAN-RIOPUERCO 345 kV	0.06	0.066	0.06	0.07	0.065
HAWKINS#	115	SANJUAN-RIOPUERCO 345 kV	0.06	0.063		0.068	0.063
HAZEL_T	46	SANJUAN-RIOPUERCO 345 kV	0.06			0.061	
HAZELDIN	4.16	SANJUAN-RIOPUERCO 345 kV	0.06			0.062	
HAZELDIN	46	SANJUAN-RIOPUERCO 345 kV	0.06			0.061	

HERNANDZ	69	SANJUAN-RIOPUERCO 345 kV	0.06			0.061	
HERNANDZ	115	SANJUAN-RIOPUERCO 345 kV	0.06	0.065	0.061	0.067	0.064
HICKOX	4.16	SANJUAN-RIOPUERCO 345 kV	0.06	0.083	0.076	0.088	0.082
HICKOX	46	SANJUAN-RIOPUERCO 345 kV	0.06	0.08	0.073	0.085	0.079
HW-11	115	SANJUAN-RIOPUERCO 345 kV	0.06	0.065		0.07	0.065
HW-CG	115	SANJUAN-RIOPUERCO 345 kV	0.06	0.065	0.06	0.07	0.065
IDEAL	4.16	SANJUAN-RIOPUERCO 345 kV	0.06	0.077	0.07	0.082	0.076
IDEAL	46	SANJUAN-RIOPUERCO 345 kV	0.06	0.073	0.067	0.078	0.073
ID-TA	46	SANJUAN-RIOPUERCO 345 kV	0.06	0.073	0.067	0.078	0.073
INEZ	12.5	SANJUAN-RIOPUERCO 345 kV	0.06	0.062		0.067	0.062
INEZ	115	SANJUAN-RIOPUERCO 345 kV	0.06	0.063		0.068	0.063
IRIS	12.5	SANJUAN-RIOPUERCO 345 kV	0.06	0.064		0.069	0.064
IRIS	115	SANJUAN-RIOPUERCO 345 kV	0.06	0.065		0.069	0.064
IRON_STR	12.5	SANJUAN-RIOPUERCO 345 kV	0.06			0.062	
IRON_STR	46	SANJUAN-RIOPUERCO 345 kV	0.06			0.061	
IRVING	115	SANJUAN-RIOPUERCO 345 kV	0.06	0.065		0.069	0.064
JEFFERSN	4.16	SANJUAN-RIOPUERCO 345 kV	0.06	0.061		0.066	0.061
JEFFERSN	115	SANJUAN-RIOPUERCO 345 kV	0.06	0.063		0.068	0.063
JEFFRSNT	115	SANJUAN-RIOPUERCO 345 kV	0.06	0.063		0.068	0.063
JUANTABO	12.5	SANJUAN-RIOPUERCO 345 kV	0.06	0.064		0.068	0.063
JUANTABO	115	SANJUAN-RIOPUERCO 345 kV	0.06	0.063		0.068	0.063
KAFB	115	SANJUAN-RIOPUERCO 345 kV	0.06	0.061		0.066	0.061
KAISER	2.4	SANJUAN-RIOPUERCO 345 kV	0.06	0.064		0.068	0.063
KAISER	12.5	SANJUAN-RIOPUERCO 345 kV	0.06	0.064		0.068	0.063
KAISER	46	SANJUAN-RIOPUERCO 345 kV	0.06	0.063		0.067	0.062
KAISER_T	46	SANJUAN-RIOPUERCO 345 kV	0.06	0.062		0.067	0.062
KELEHER	4.16	SANJUAN-RIOPUERCO 345 kV	0.06	0.063		0.067	0.062
KELEHER	46	SANJUAN-RIOPUERCO 345 kV	0.06	0.06		0.064	
LA_JARA	69	SANJUAN-RIOPUERCO 345 kV	0.06	0.067	0.061	0.072	0.067
LA_JARA	115	SANJUAN-RIOPUERCO 345 kV	0.06	0.066	0.061	0.071	0.066
LABAJADA	12.5	SANJUAN-RIOPUERCO 345 kV	0.06	0.069	0.064	0.073	0.069
LABAJADA	46	SANJUAN-RIOPUERCO 345 kV	0.06	0.065		0.069	0.064
LAGUNA	12.5	SANJUAN-RIOPUERCO 345 kV	0.06	0.061		0.065	
LAGUNA	115	SANJUAN-RIOPUERCO 345 kV	0.06			0.06	
LAGUNAT	115	SANJUAN-RIOPUERCO 345 kV	0.06	0.063		0.067	
LAWRENC#	115	SANJUAN-RIOPUERCO 345 kV	0.06	0.064		0.068	0.064
LAWRENCE	12.5	SANJUAN-RIOPUERCO 345 kV	0.06	0.065		0.07	0.065
LAWRNCET	115	SANJUAN-RIOPUERCO 345 kV	0.06	0.064		0.068	0.064
LENKURT	12.5	SANJUAN-RIOPUERCO 345 kV	0.06	0.063		0.068	0.063
LENKURT	115	SANJUAN-RIOPUERCO 345 kV	0.06	0.065		0.069	0.064
LEYENDKR	12.5	SANJUAN-RIOPUERCO 345 kV	0.06	0.063		0.068	0.063
LEYENDKR	115	SANJUAN-RIOPUERCO 345 kV	0.06	0.063		0.067	0.062
LOMAS	12.5	SANJUAN-RIOPUERCO 345 kV	0.06	0.064		0.069	0.064
LOMAS	115	SANJUAN-RIOPUERCO 345 kV	0.06	0.063		0.068	0.063
LOMAS_1	12.5	SANJUAN-RIOPUERCO 345 kV	0.06	0.063		0.067	0.063
LOMAS_2	12.5	SANJUAN-RIOPUERCO 345 kV	0.06	0.063		0.068	0.063
LOS_CHAV	12.5	SANJUAN-RIOPUERCO 345 kV	0.06			0.06	
LOS_MOR1	12.5	SANJUAN-RIOPUERCO 345 kV	0.06			0.064	
LOS_MORR	115	SANJUAN-RIOPUERCO 345 kV	0.06			0.062	
LOSANGEL	12.5	SANJUAN-RIOPUERCO 345 kV	0.06	0.062		0.067	0.062

LOSANGEL	115	SANJUAN-RIOPUERCO 345 kV	0.06	0.063		0.068	0.063
LOSLUNAS	12.5	SANJUAN-RIOPUERCO 345 kV	0.06			0.063	
LOSTHRZN	12.5	SANJUAN-RIOPUERCO 345 kV	0.06	0.062		0.067	0.061
LOSTHRZN	115	SANJUAN-RIOPUERCO 345 kV	0.06	0.065		0.069	0.064
LSTHRZNT	115	SANJUAN-RIOPUERCO 345 kV	0.06	0.065		0.069	0.064
LVGT	13.8	SANJUAN-RIOPUERCO 345 kV	0.06	0.071	0.066	0.075	0.071
M_PLAZA	12.5	SANJUAN-RIOPUERCO 345 kV	0.06	0.065		0.07	0.065
M_PLAZA	115	SANJUAN-RIOPUERCO 345 kV	0.06	0.063		0.067	0.062
MANHTTEN	12.5	SANJUAN-RIOPUERCO 345 kV	0.06	0.087	0.08	0.092	0.086
MARIPOSA	12.5	SANJUAN-RIOPUERCO 345 kV	0.06	0.061		0.065	0.06
MARIPOSA	115	SANJUAN-RIOPUERCO 345 kV	0.06	0.062		0.066	0.062
MEJIA	12.5	SANJUAN-RIOPUERCO 345 kV	0.06	0.066	0.061	0.07	0.066
MEJIA	115	SANJUAN-RIOPUERCO 345 kV	0.06	0.064		0.068	0.063
MEJIA_T	115	SANJUAN-RIOPUERCO 345 kV	0.06	0.064		0.067	0.063
MENAUL	12.5	SANJUAN-RIOPUERCO 345 kV	0.06	0.068	0.062	0.073	0.068
MENAUL	115	SANJUAN-RIOPUERCO 345 kV	0.06	0.063		0.068	0.063
MGLLUJAN	12.5	SANJUAN-RIOPUERCO 345 kV	0.06	0.065		0.069	0.064
MGLLUJAN	46	SANJUAN-RIOPUERCO 345 kV	0.06	0.064		0.068	0.063
MGLLUJAN	115	SANJUAN-RIOPUERCO 345 kV	0.06	0.064		0.068	0.064
MONTANO	12.5	SANJUAN-RIOPUERCO 345 kV	0.06	0.062		0.067	0.062
MONTANO	115	SANJUAN-RIOPUERCO 345 kV	0.06	0.063		0.067	0.062
MONTANOT	115	SANJUAN-RIOPUERCO 345 kV	0.06	0.063		0.067	0.063
MORIARTY	69	SANJUAN-RIOPUERCO 345 kV	0.06			0.062	
MORRIS	12.5	SANJUAN-RIOPUERCO 345 kV	0.06	0.063		0.067	0.062
MORRIS	115	SANJUAN-RIOPUERCO 345 kV	0.06	0.063		0.068	0.063
MPLAZA_T	115	SANJUAN-RIOPUERCO 345 kV	0.06	0.063		0.067	0.062
MSSION	115	SANJUAN-RIOPUERCO 345 kV	0.06	0.062		0.066	0.061
MSSION_1	12.5	SANJUAN-RIOPUERCO 345 kV	0.06			0.063	
MSSION_2	12.5	SANJUAN-RIOPUERCO 345 kV	0.06			0.063	
MSSIONT	115	SANJUAN-RIOPUERCO 345 kV	0.06	0.062		0.066	0.061
N_ISLETA	12.5	SANJUAN-RIOPUERCO 345 kV	0.06			0.061	
NO_ALGOD	46	SANJUAN-RIOPUERCO 345 kV	0.06	0.061		0.065	0.061
NO_BERN	12.5	SANJUAN-RIOPUERCO 345 kV	0.06	0.061		0.065	0.061
NO_BERN	115	SANJUAN-RIOPUERCO 345 kV	0.06	0.062		0.066	0.061
NORTH_1	12.5	SANJUAN-RIOPUERCO 345 kV	0.06	0.061		0.066	0.061
NORTH_2	12.5	SANJUAN-RIOPUERCO 345 kV	0.06			0.064	
NORTHPNM	115	SANJUAN-RIOPUERCO 345 kV	0.06	0.062		0.066	0.062
NORTON_1	115	SANJUAN-RIOPUERCO 345 kV	0.06			0.061	
NORTON_2	115	SANJUAN-RIOPUERCO 345 kV	0.06			0.061	
ORTIZ	12.5	SANJUAN-RIOPUERCO 345 kV	0.06	0.065		0.069	0.064
ORTIZ	115	SANJUAN-RIOPUERCO 345 kV	0.06	0.065		0.069	0.065
PACHMANN	115	SANJUAN-RIOPUERCO 345 kV	0.06	0.064		0.069	0.064
PAGUATE	24.9	SANJUAN-RIOPUERCO 345 kV	0.06			0.062	
PAGUATE	115	SANJUAN-RIOPUERCO 345 kV	0.06			0.06	
PALM	12.5	SANJUAN-RIOPUERCO 345 kV	0.06	0.065		0.07	0.065
PALM_T	115	SANJUAN-RIOPUERCO 345 kV	0.06	0.065		0.069	0.064
PANORAMA	12.5	SANJUAN-RIOPUERCO 345 kV	0.06	0.066	0.061	0.071	0.066
PANORAMA	115	SANJUAN-RIOPUERCO 345 kV	0.06	0.065		0.069	0.065
PANORAMT	115	SANJUAN-RIOPUERCO 345 kV	0.06	0.065		0.069	0.065
PARADIS1	12.5	SANJUAN-RIOPUERCO 345 kV	0.06			0.064	

PARADIS1	115	SANJUAN-RIOPUERCO 345 kV	0.06	0.065		0.069	0.064
PARADIS2	12.5	SANJUAN-RIOPUERCO 345 kV	0.06	0.062		0.066	0.062
PARADIS2	115	SANJUAN-RIOPUERCO 345 kV	0.06	0.061		0.065	0.061
PECOS	12.5	SANJUAN-RIOPUERCO 345 kV	0.06	0.072	0.066	0.076	0.071
PECOS	46	SANJUAN-RIOPUERCO 345 kV	0.06	0.073	0.067	0.078	0.073
PERALTA	12.5	SANJUAN-RIOPUERCO 345 kV	0.06	0.082	0.075	0.087	0.081
PN-CG	115	SANJUAN-RIOPUERCO 345 kV	0.06	0.062		0.067	0.062
POWRPLNT	12.5	SANJUAN-RIOPUERCO 345 kV	0.06	0.066	0.06	0.07	0.065
PRAGER	12.5	SANJUAN-RIOPUERCO 345 kV	0.06	0.064		0.068	0.063
PRAGER	46	SANJUAN-RIOPUERCO 345 kV	0.06			0.063	
PRAGER	115	SANJUAN-RIOPUERCO 345 kV	0.06	0.063		0.068	0.063
PRGRSS	12.5	SANJUAN-RIOPUERCO 345 kV	0.06	0.064		0.068	0.064
PRGRSS	115	SANJUAN-RIOPUERCO 345 kV	0.06	0.065		0.069	0.064
PRINCESS	12.5	SANJUAN-RIOPUERCO 345 kV	0.06	0.065		0.069	0.064
PRINCESS	115	SANJUAN-RIOPUERCO 345 kV	0.06	0.065		0.069	0.065
PY-EL-KL	46	SANJUAN-RIOPUERCO 345 kV	0.06			0.064	
REEVE_G1	13.8	SANJUAN-RIOPUERCO 345 kV	0.06	0.062		0.066	0.061
REEVE_G2	13.8	SANJUAN-RIOPUERCO 345 kV	0.06	0.062		0.066	0.061
REEVES	12.5	SANJUAN-RIOPUERCO 345 kV	0.06			0.063	
REEVES_1	115	SANJUAN-RIOPUERCO 345 kV	0.06	0.063		0.068	0.063
REEVES_2	115	SANJUAN-RIOPUERCO 345 kV	0.06			0.063	
RIOHONDO	12.5	SANJUAN-RIOPUERCO 345 kV	0.06	0.066	0.06	0.07	0.065
RIOHONDO	115	SANJUAN-RIOPUERCO 345 kV	0.06	0.065		0.069	0.065
RIOPUERC	115	SANJUAN-RIOPUERCO 345 kV	0.06	0.062		0.066	0.061
RIOPUERC	345	SANJUAN-RIOPUERCO 345 kV	0.06			0.062	
RODEO	12.5	SANJUAN-RIOPUERCO 345 kV	0.06	0.068	0.062	0.072	0.067
RODEO_T	115	SANJUAN-RIOPUERCO 345 kV	0.06	0.065		0.069	0.064
ROWE	24.9	SANJUAN-RIOPUERCO 345 kV	0.06	0.083	0.076	0.087	0.082
ROWE_TAP	115	SANJUAN-RIOPUERCO 345 kV	0.06	0.071	0.066	0.076	0.071
ROY	12.5	SANJUAN-RIOPUERCO 345 kV	0.06			0.061	
ROY	115	SANJUAN-RIOPUERCO 345 kV	0.06			0.063	
RR_TAP	115	SANJUAN-RIOPUERCO 345 kV	0.06	0.065		0.069	0.064
S._ANTON	46	SANJUAN-RIOPUERCO 345 kV	0.06	0.075	0.068	0.08	0.074
S.ANTON1	12.5	SANJUAN-RIOPUERCO 345 kV	0.06	0.081	0.074	0.086	0.08
S.ANTON2	12.5	SANJUAN-RIOPUERCO 345 kV	0.06	0.078	0.071	0.083	0.077
S.JOSEPH	12.5	SANJUAN-RIOPUERCO 345 kV	0.06	0.063		0.067	0.063
S.JOSEPH	115	SANJUAN-RIOPUERCO 345 kV	0.06	0.063		0.068	0.063
S_DOMING	12.5	SANJUAN-RIOPUERCO 345 kV	0.06	0.065		0.07	0.065
S_DOMING	46	SANJUAN-RIOPUERCO 345 kV	0.06	0.062		0.067	0.062
SAN_CLEM	12.5	SANJUAN-RIOPUERCO 345 kV	0.06			0.062	
SANDIA	345	SANJUAN-RIOPUERCO 345 kV	0.06	0.062		0.066	0.062
SANDIA_1	46	SANJUAN-RIOPUERCO 345 kV	0.06	0.066	0.061	0.07	0.066
SANDIA_1	115	SANJUAN-RIOPUERCO 345 kV	0.06	0.064		0.068	0.064
SANDIA_2	46	SANJUAN-RIOPUERCO 345 kV	0.06	0.069	0.063	0.073	0.068
SANDIA_2	115	SANJUAN-RIOPUERCO 345 kV	0.06	0.064		0.069	0.064
SANDIAK5	115	SANJUAN-RIOPUERCO 345 kV	0.06	0.064		0.068	0.064
SANPEDRO	12.5	SANJUAN-RIOPUERCO 345 kV	0.06	0.065		0.07	0.065
SANPEDRO	115	SANJUAN-RIOPUERCO 345 kV	0.06	0.065	0.06	0.07	0.065
SANTA_FE	46	SANJUAN-RIOPUERCO 345 kV	0.06	0.064		0.068	0.064
SARA_CS	115	SANJUAN-RIOPUERCO 345 kV	0.06	0.065		0.07	0.065

SARA_CT	115	SANJUAN-RIOPUERCO 345 kV	0.06	0.065		0.07	0.065
SARA_RD1	12.5	SANJUAN-RIOPUERCO 345 kV	0.06	0.064		0.068	0.064
SARA_RD2	12.5	SANJUAN-RIOPUERCO 345 kV	0.06	0.066	0.06	0.07	0.065
SARA_RD3	12.5	SANJUAN-RIOPUERCO 345 kV	0.06	0.065		0.069	0.064
SARA_RD4	12.5	SANJUAN-RIOPUERCO 345 kV	0.06	0.065		0.069	0.065
SARA_RD5	12.5	SANJUAN-RIOPUERCO 345 kV	0.06	0.065		0.069	0.064
SARA_RD6	12.5	SANJUAN-RIOPUERCO 345 kV	0.06	0.065		0.069	0.064
SARA_RD7	12.5	SANJUAN-RIOPUERCO 345 kV	0.06	0.065		0.069	0.065
SARA_RD8	12.5	SANJUAN-RIOPUERCO 345 kV	0.06	0.065		0.069	0.065
SFSEWER	46	SANJUAN-RIOPUERCO 345 kV	0.06	0.064		0.068	0.063
SHELLTAP	115	SANJUAN-RIOPUERCO 345 kV	0.06	0.063		0.067	0.063
SIGNET_2	12.5	SANJUAN-RIOPUERCO 345 kV	0.06	0.065		0.07	0.065
SIGNET_T	115	SANJUAN-RIOPUERCO 345 kV	0.06	0.063		0.068	0.063
SIGNETIC	12.5	SANJUAN-RIOPUERCO 345 kV	0.06	0.065		0.07	0.065
SIGNETIC	115	SANJUAN-RIOPUERCO 345 kV	0.06	0.064		0.068	0.063
SNFELIPE	12.5	SANJUAN-RIOPUERCO 345 kV	0.06	0.062		0.066	0.062
SNFELIPE	46	SANJUAN-RIOPUERCO 345 kV	0.06	0.062		0.066	0.061
SNYSIDRO	69	SANJUAN-RIOPUERCO 345 kV	0.06	0.065		0.069	0.064
SNYSIDRO	115	SANJUAN-RIOPUERCO 345 kV	0.06	0.064		0.068	0.063
SOCORROP	24.9	SANJUAN-RIOPUERCO 345 kV	0.06			0.061	
SOCORROP	69	SANJUAN-RIOPUERCO 345 kV	0.06			0.061	
SP-83	115	SANJUAN-RIOPUERCO 345 kV	0.06	0.065		0.069	0.065
SPACHCO2	12.5	SANJUAN-RIOPUERCO 345 kV	0.06	0.068	0.063	0.073	0.068
SPACHECO	12.5	SANJUAN-RIOPUERCO 345 kV	0.06	0.068	0.062	0.072	0.067
SPACHECO	115	SANJUAN-RIOPUERCO 345 kV	0.06	0.065		0.069	0.065
SPEDRO_T	115	SANJUAN-RIOPUERCO 345 kV	0.06	0.065	0.06	0.07	0.065
STATEPEN	12.5	SANJUAN-RIOPUERCO 345 kV	0.06	0.064		0.068	0.064
STATEPEN	115	SANJUAN-RIOPUERCO 345 kV	0.06	0.065		0.069	0.064
STORRIE	69	SANJUAN-RIOPUERCO 345 kV	0.06	0.073	0.068	0.077	0.073
STORRIE	115	SANJUAN-RIOPUERCO 345 kV	0.06	0.072	0.067	0.076	0.072
TAIBANMS	345	SANJUAN-RIOPUERCO 345 kV	0.06	0.066		0.068	0.063
THOMAS	12.5	SANJUAN-RIOPUERCO 345 kV	0.06	0.062		0.067	0.062
THOMAS	115	SANJUAN-RIOPUERCO 345 kV	0.06	0.063		0.068	0.063
TIJERAS	12.5	SANJUAN-RIOPUERCO 345 kV	0.06	0.08	0.073	0.086	0.08
TIJERAS	46	SANJUAN-RIOPUERCO 345 kV	0.06	0.073	0.067	0.078	0.073
TL-1	115	SANJUAN-RIOPUERCO 345 kV	0.06	0.063		0.067	0.063
TRAMWAY	12.5	SANJUAN-RIOPUERCO 345 kV	0.06	0.064		0.069	0.064
TRAMWAY	115	SANJUAN-RIOPUERCO 345 kV	0.06	0.062		0.066	0.062
TRUMAN	12.5	SANJUAN-RIOPUERCO 345 kV	0.06	0.065		0.069	0.064
TRUMAN	115	SANJUAN-RIOPUERCO 345 kV	0.06	0.065		0.069	0.065
TRUMAN_T	115	SANJUAN-RIOPUERCO 345 kV	0.06	0.065		0.069	0.064
UNSER	12.5	SANJUAN-RIOPUERCO 345 kV	0.06	0.063		0.067	0.063
UNSER	115	SANJUAN-RIOPUERCO 345 kV	0.06	0.064		0.068	0.064
VALENCIA	46	SANJUAN-RIOPUERCO 345 kV	0.06	0.072	0.066	0.075	0.071
VALENCIA	115	SANJUAN-RIOPUERCO 345 kV	0.06	0.073	0.068	0.077	0.073
VERANDA	12.5	SANJUAN-RIOPUERCO 345 kV	0.06	0.066		0.07	0.065
VERANDAT	115	SANJUAN-RIOPUERCO 345 kV	0.06	0.064		0.069	0.064
VOLCANO	115	SANJUAN-RIOPUERCO 345 kV	0.06			0.063	
VOLCANO1	12.5	SANJUAN-RIOPUERCO 345 kV	0.06			0.061	
VOLCANO2	12.5	SANJUAN-RIOPUERCO 345 kV	0.06			0.061	

VOLCANOT	115	SANJUAN-RIOPUERCO 345 kV	0.06			0.063	
WARNER	12.5	SANJUAN-RIOPUERCO 345 kV	0.06	0.066	0.06	0.07	0.065
WARNER	46	SANJUAN-RIOPUERCO 345 kV	0.06	0.064		0.068	0.064
WAYNE 1	12.5	SANJUAN-RIOPUERCO 345 kV	0.06			0.062	
WAYNE 1	115	SANJUAN-RIOPUERCO 345 kV	0.06			0.064	
WAYNE 2	12.5	SANJUAN-RIOPUERCO 345 kV	0.06	0.062		0.066	0.061
WAYNE 2	115	SANJUAN-RIOPUERCO 345 kV	0.06	0.064		0.068	0.063
WESTMESA	230	SANJUAN-RIOPUERCO 345 kV	0.06	0.064		0.068	0.063
WESTMESA	345	SANJUAN-RIOPUERCO 345 kV	0.06	0.063		0.067	0.062
WESTMS_1	115	SANJUAN-RIOPUERCO 345 kV	0.06	0.064		0.068	0.064
WESTMS_2	115	SANJUAN-RIOPUERCO 345 kV	0.06	0.063		0.067	0.063
WESTMS_3	115	SANJUAN-RIOPUERCO 345 kV	0.06	0.064		0.068	0.064
WINROCK	12.5	SANJUAN-RIOPUERCO 345 kV	0.06	0.067	0.061	0.071	0.066
WINROCK	115	SANJUAN-RIOPUERCO 345 kV	0.06	0.065		0.07	0.065
WYOMING	12.5	SANJUAN-RIOPUERCO 345 kV	0.06	0.062		0.067	0.062
WYOMING	115	SANJUAN-RIOPUERCO 345 kV	0.06	0.06		0.065	
ZAFARANO	12.5	SANJUAN-RIOPUERCO 345 kV	0.06	0.064		0.068	0.063
ZAFARANT	115	SANJUAN-RIOPUERCO 345 kV	0.06	0.064		0.068	0.063
ZAMORA	12.5	SANJUAN-RIOPUERCO 345 kV	0.06	0.078	0.071	0.083	0.078
ZAMORA	46	SANJUAN-RIOPUERCO 345 kV	0.06	0.074	0.067	0.079	0.073
ZAMORA_T	46	SANJUAN-RIOPUERCO 345 kV	0.06	0.073	0.067	0.079	0.073
ZIA_1	46	SANJUAN-RIOPUERCO 345 kV	0.06	0.063		0.067	0.063
ZIA_1	115	SANJUAN-RIOPUERCO 345 kV	0.06	0.065		0.069	0.064
ZIA_2	46	SANJUAN-RIOPUERCO 345 kV	0.06	0.071	0.066	0.076	0.071
ZIA_2	115	SANJUAN-RIOPUERCO 345 kV	0.06	0.065		0.069	0.064

Appendix 4
Powerflow Results:
Optional Interconnection Plan

Post-Contingency Branch Overloads

Contingency	Monitored Element	Rating	Peak Load Pre-Proj	Peak Load Post-Proj	60% Load Pre-Proj	60% Load Post-Proj
FOURCORN-WESTMESA 345 kV	MKCOWIND 115.00-MARQUEZT 115.00 ck=1	668 Amps				0.904
FOURCORN-WESTMESA 345 kV	NORTON_2 115.00-HERNANDZ 115.00 ck=1	879 Amps	0.974	0.959	0.985	0.972
FOURCORN-WESTMESA 345 kV	OJO 115.00-HERNANDZ 115.00 ck=1	904 Amps	0.927	0.915	0.935	0.925
FOURCORN-WESTMESA 345 kV	OJO 345.00-OJO 115.00 ck=1	180 MVA	0.942	0.931	0.95	0.94
FOURCORN-WESTMESA 345 kV	PECOS 46.00-CANYON 46.00 ck=1	515 Amps	0.913	0.908	0.914	0.912
FOURCORN-WESTMESA 345 kV	SAN_JUAN 345.00-RIOPUERC 345.00 ck=1	2000 Amps	0.953	0.938	0.963	0.95
FOURCORN-WESTMESA 345 kV	SAN_JUAN 345.00-SJUAN_G1 22.00 ck=1	357 MVA	0.93		0.931	
FOURCORN-WESTMESA 345 kV	SAN_JUAN 345.00-SJUAN_G2 24.00 ck=1	357 MVA	0.92	0.915	0.921	0.918
FOURCORN-WESTMESA 345 kV	SAN_JUAN 345.00-SJUAN_G4 22.00 ck=1	585 MVA	0.966	0.962	0.972	0.971
FOURCORN-WESTMESA 345 kV	ZIA_2 46.00-PECOS 46.00 ck=1	515 Amps	0.983	0.978	0.984	0.982
PEGS-AMBROSIA 230 kV	BLUEWATR 115.00-PEGS 115.00 ck=1	728 Amps	1.092	1.044	1.12	1.073
SANJUAN-RIOPUERCO 345 kV	CANYON 46.00-FT_MARCY 46.00 ck=1	515 Amps	0.922	0.913	0.926	0.919
SANJUAN-RIOPUERCO 345 kV	FOURCORN 345.00-WESTMESA 345.00 ck=1	2000 Amps	0.944	0.928	0.956	0.942
SANJUAN-RIOPUERCO 345 kV	MARQUEZT 115.00-UNSER 115.00 ck=1	668 Amps	0.913	0.927	0.934	0.949
SANJUAN-RIOPUERCO 345 kV	MKCOWIND 115.00-MARQUEZT 115.00 ck=1	668 Amps	0.921	0.935	0.942	0.957
SANJUAN-RIOPUERCO 345 kV	NORTON_2 115.00-HERNANDZ 115.00 ck=1	879 Amps			0.91	
SANJUAN-RIOPUERCO 345 kV	PECOS 46.00-CANYON 46.00 ck=1	515 Amps	0.945	0.935	0.949	0.942
SANJUAN-RIOPUERCO 345 kV	REEVES_2 115.00-REEVE_G3 13.80 ck=1	85 MVA	0.985	0.962	0.986	0.982
SANJUAN-RIOPUERCO 345 kV	SAN_JUAN 345.00-SJUAN_G1 22.00 ck=1	357 MVA	0.921		0.923	
SANJUAN-RIOPUERCO 345 kV	SAN_JUAN 345.00-SJUAN_G2 24.00 ck=1	357 MVA	0.912	0.907	0.913	0.909
SANJUAN-RIOPUERCO 345 kV	SAN_JUAN 345.00-SJUAN_G4 22.00 ck=1	585 MVA	0.959	0.955	0.966	0.964
SANJUAN-RIOPUERCO 345 kV	SANDIA_2 46.00-ID-TA 46.00 ck=1	389 Amps	0.922	0.921	0.927	0.929
SANJUAN-RIOPUERCO 345 kV	ZIA_2 46.00-PECOS 46.00 ck=1	515 Amps	1.016	1.006	1.021	1.014
WESTMESA-AMBROSIA 230 kV	BLUEWATR 115.00-GRANTS_T 115.00 ck=1	497 Amps	0.944		0.925	
WESTMESA-AMBROSIA 230 kV	LAGUNA 115.00-GRANTS_T 115.00 ck=1	497 Amps		0.933		0.965
WESTMESA-AMBROSIA 230 kV	LAGUNA 115.00-LAGUNAT 115.00 ck=1	497 Amps				0.928
WESTMESA-AMBROSIA 230 kV	LAGUNAT 115.00-LSTHRZNT 115.00 ck=1	497 Amps				0.923
WESTMESA-AMBROSIA 230 kV	MARQUEZT 115.00-UNSER 115.00 ck=1	668 Amps	0.974	1.002	0.997	1.026
WESTMESA-AMBROSIA 230 kV	MKCOWIND 115.00-MARQUEZT 115.00 ck=1	668 Amps	0.982	1.01	1.005	1.035
WESTMESA-AMBROSIA 230 kV	UNSER 115.00-WESTMS_1 115.00 ck=1	668 Amps				0.9
WESTMS-AMBRO-BIST 230 kV	BLUEWATR 115.00-GRANTS_T 115.00 ck=1	497 Amps	0.944		0.937	
WESTMS-AMBRO-BIST 230 kV	LAGUNA 115.00-GRANTS_T 115.00 ck=1	497 Amps		0.958		1.003
WESTMS-AMBRO-BIST 230 kV	LAGUNA 115.00-LAGUNAT 115.00 ck=1	497 Amps		0.901		0.966
WESTMS-AMBRO-BIST 230 kV	LAGUNAT 115.00-LSTHRZNT 115.00 ck=1	497 Amps				0.96
WESTMS-AMBRO-BIST 230 kV	LSTHRZNT 115.00-WESTMS_3 115.00 ck=1	497 Amps				0.908
WESTMS-AMBRO-BIST 230 kV	MARQUEZT 115.00-UNSER 115.00 ck=1	668 Amps	0.974	1.025	1.008	1.06
WESTMS-AMBRO-BIST 230 kV	MKCOWIND 115.00-MARQUEZT 115.00 ck=1	668 Amps	0.982	1.033	1.016	1.068
WESTMS-AMBRO-BIST 230 kV	UNSER 115.00-WESTMS_1 115.00 ck=1	668 Amps				0.934
WESTMS-AMBRO-PEGS 230 kV	BLUEWATR 115.00-GRANTS_T 115.00 ck=1	497 Amps	1.012		0.998	
WESTMS-AMBRO-PEGS 230 kV	BLUEWATR 115.00-PEGS 115.00 ck=1	728 Amps	0.984	0.935	1.01	0.959
WESTMS-AMBRO-PEGS 230 kV	LAGUNA 115.00-GRANTS_T 115.00 ck=1	497 Amps		1.005	0.925	1.041
WESTMS-AMBRO-PEGS 230 kV	LAGUNA 115.00-LAGUNAT 115.00 ck=1	497 Amps		0.947		1.003
WESTMS-AMBRO-PEGS 230 kV	LAGUNAT 115.00-LSTHRZNT 115.00 ck=1	497 Amps		0.942		0.998
WESTMS-AMBRO-PEGS 230 kV	LSTHRZNT 115.00-WESTMS_3 115.00 ck=1	497 Amps				0.946
WESTMS-AMBRO-PEGS 230 kV	MARQUEZT 115.00-UNSER 115.00 ck=1	668 Amps	0.95	0.978	0.973	1.001
WESTMS-AMBRO-PEGS 230 kV	MKCOWIND 115.00-MARQUEZT 115.00 ck=1	668 Amps	0.958	0.986	0.981	1.009

Post-Contingency Low Voltage Violations

Bus	kV	Contingency	Criteria	Peak Load Pre-Proj	Peak Load Post-Proj	60% Load Pre-Proj	60% Load Post-Proj
SUNSET_N	13.8	SANJUAN-RIOPUERCO 345 kV	0.95	0.945	0.945	0.945	0.945
BECKNER	12.5	SANJUAN-RIOPUERCO 345 kV	0.925			0.924	
BEL_AIR	12.5	SANJUAN-RIOPUERCO 345 kV	0.925	0.923		0.919	0.924
CANYON	12.5	SANJUAN-RIOPUERCO 345 kV	0.925	0.916	0.924	0.912	0.918
CAPITOL	4.16	SANJUAN-RIOPUERCO 345 kV	0.925	0.907	0.917	0.903	0.91
EASTRDGE	12.5	SANJUAN-RIOPUERCO 345 kV	0.925			0.924	
EMBUDO	12.5	SANJUAN-RIOPUERCO 345 kV	0.925			0.923	
FT_MARCY	12.5	SANJUAN-RIOPUERCO 345 kV	0.925	0.91	0.919	0.906	0.912
HALONA	4.16	SANJUAN-RIOPUERCO 345 kV	0.925	0.904	0.913	0.9	0.907
HICKOX	4.16	SANJUAN-RIOPUERCO 345 kV	0.925	0.91	0.919	0.907	0.913
INEZ	12.5	SANJUAN-RIOPUERCO 345 kV	0.925			0.923	
LOMAS	12.5	SANJUAN-RIOPUERCO 345 kV	0.925	0.923		0.919	0.925
LVGT	13.8	SANJUAN-RIOPUERCO 345 kV	0.925	0.918	0.924	0.914	0.919
M_PLAZA	12.5	SANJUAN-RIOPUERCO 345 kV	0.925			0.922	
MANHTTEN	12.5	SANJUAN-RIOPUERCO 345 kV	0.925	0.903	0.912	0.899	0.905
MONTANO	12.5	SANJUAN-RIOPUERCO 345 kV	0.925			0.922	
MORRIS	12.5	SANJUAN-RIOPUERCO 345 kV	0.925			0.922	
NORTH_1	12.5	SANJUAN-RIOPUERCO 345 kV	0.925			0.925	
ORTIZ	12.5	SANJUAN-RIOPUERCO 345 kV	0.925	0.922		0.918	0.923
PARADIS2	12.5	SANJUAN-RIOPUERCO 345 kV	0.925			0.924	
PECOS	12.5	SANJUAN-RIOPUERCO 345 kV	0.925	0.919		0.916	0.921
PERALTA	12.5	SANJUAN-RIOPUERCO 345 kV	0.925	0.908	0.916	0.904	0.91
PRAGER	12.5	SANJUAN-RIOPUERCO 345 kV	0.925			0.923	
PRINCESS	12.5	SANJUAN-RIOPUERCO 345 kV	0.925	0.923		0.919	0.923
S.ANTON1	12.5	SANJUAN-RIOPUERCO 345 kV	0.925	0.924	0.924	0.919	0.917
S.ANTON2	12.5	SANJUAN-RIOPUERCO 345 kV	0.925	0.918	0.918	0.913	0.911
SANDIA	345	SANJUAN-RIOPUERCO 345 kV	0.925	0.917	0.924	0.913	0.917
SANPEDRO	12.5	SANJUAN-RIOPUERCO 345 kV	0.925	0.925		0.921	
SPACHCO2	12.5	SANJUAN-RIOPUERCO 345 kV	0.925	0.924		0.921	
THOMAS	12.5	SANJUAN-RIOPUERCO 345 kV	0.925			0.924	
UNSER	12.5	SANJUAN-RIOPUERCO 345 kV	0.925			0.925	
WAYNE 2	12.5	SANJUAN-RIOPUERCO 345 kV	0.925			0.924	
WESTMESA	230	SANJUAN-RIOPUERCO 345 kV	0.925	0.923		0.919	0.921
WESTMESA	345	SANJUAN-RIOPUERCO 345 kV	0.925			0.924	

Post-Contingency High Voltage Violations

Bus	kV	Contingency	Criteria	Peak Load Pre-Proj	Peak Load Post-Proj	60% Load Pre-Proj	60% Load Post-Proj
ALLISON#	115	PEGS-YAHTAHEY 115 kV	1.05	1.05	1.05	1.05	
ALLISONT	115	PEGS-YAHTAHEY 115 kV	1.05	1.051	1.051	1.052	1.051
AMBROSIA	115	WESTMESA-AMBROSIA 230 kV	1.05	1.054	1.056	1.058	1.056
AMBROSIA	115	WESTMS-AMBRO-BIST 230 kV	1.05	1.05	1.052	1.054	1.052
KERMAC	115	WESTMESA-AMBROSIA 230 kV	1.05	1.053	1.055	1.057	1.055
KERMAC	115	WESTMS-AMBRO-BIST 230 kV	1.05	1.045	1.051	1.054	1.051
KERMACT	115	WESTMESA-AMBROSIA 230 kV	1.05	1.053	1.055	1.057	1.055
KERMACT	115	WESTMS-AMBRO-BIST 230 kV	1.05		1.051	1.054	1.051
RANCHERS	115	WESTMESA-AMBROSIA 230 kV	1.05			1.052	1.05
SJUAN_G3	22	FOURCORN-WESTMESA 345 kV	1.05	1.052	1.05	1.052	1.051
SJUAN_G4	22	FOURCORN-WESTMESA 345 kV	1.05	1.051		1.051	1.05
TAYLOR_P	115	WESTMESA-AMBROSIA 230 kV	1.05	1.053	1.055	1.057	1.055
TAYLOR_P	115	WESTMS-AMBRO-BIST 230 kV	1.05		1.051	1.054	1.051
UNITED	115	WESTMESA-AMBROSIA 230 kV	1.05	1.053	1.055	1.057	1.055
UNITED	115	WESTMS-AMBRO-BIST 230 kV	1.05		1.051	1.054	1.051
YAHTAHEY	115	PEGS-YAHTAHEY 115 kV	1.05	1.056	1.056	1.057	1.056

Post-Contingency Voltage Drop Violations

Bus	kV	Contingency	Criteria	Peak Load Pre-Proj	Peak Load Post-Proj	60% Load Pre-Proj	60% Load Post-Proj
12ST_TAP	46	SANJUAN-RIOPUERCO 345 kV	0.06	0.072	0.066	0.075	0.071
ALCAZAR	12.5	SANJUAN-RIOPUERCO 345 kV	0.06	0.067	0.06	0.07	0.065
ALCAZAR	115	SANJUAN-RIOPUERCO 345 kV	0.06	0.065		0.069	0.064
ALGODONE	12.5	SANJUAN-RIOPUERCO 345 kV	0.06	0.063		0.067	0.062
ALGODONE	115	SANJUAN-RIOPUERCO 345 kV	0.06	0.063		0.066	0.061
ALIRE	12.5	SANJUAN-RIOPUERCO 345 kV	0.06	0.067	0.061	0.07	0.066
ALIRE_T	46	SANJUAN-RIOPUERCO 345 kV	0.06	0.065		0.068	0.063
AN_TAP	115	SANJUAN-RIOPUERCO 345 kV	0.06	0.062		0.065	0.06
ARNO	46	SANJUAN-RIOPUERCO 345 kV	0.06	0.06		0.064	
ARNO_1	12.5	SANJUAN-RIOPUERCO 345 kV	0.06	0.062		0.065	0.06
ARNO_2	12.5	SANJUAN-RIOPUERCO 345 kV	0.06	0.061		0.065	0.06
ARRIBA	12.5	SANJUAN-RIOPUERCO 345 kV	0.06	0.071	0.066	0.075	0.07
ARRIBA	115	SANJUAN-RIOPUERCO 345 kV	0.06	0.073	0.067	0.076	0.072
ARRIBA_T	115	SANJUAN-RIOPUERCO 345 kV	0.06	0.073	0.067	0.076	0.072
ASPEN	12.5	SANJUAN-RIOPUERCO 345 kV	0.06	0.062		0.065	0.061
ASPEN	115	SANJUAN-RIOPUERCO 345 kV	0.06	0.064		0.067	0.063
AVILA	12.5	SANJUAN-RIOPUERCO 345 kV	0.06	0.061		0.065	0.06
AVILA	115	SANJUAN-RIOPUERCO 345 kV	0.06	0.062		0.065	0.06
AVILA_T	115	SANJUAN-RIOPUERCO 345 kV	0.06	0.062		0.065	0.06
B-A	115	SANJUAN-RIOPUERCO 345 kV	0.06	0.063		0.066	0.062
B-A	345	SANJUAN-RIOPUERCO 345 kV	0.06			0.061	
BACA	12.5	SANJUAN-RIOPUERCO 345 kV	0.06	0.077	0.071	0.081	0.076
BACA	46	SANJUAN-RIOPUERCO 345 kV	0.06	0.072	0.066	0.075	0.071
BALL_PRK	4.16	SANJUAN-RIOPUERCO 345 kV	0.06			0.063	
BALL_PRK	46	SANJUAN-RIOPUERCO 345 kV	0.06			0.061	
BALLP_T	46	SANJUAN-RIOPUERCO 345 kV	0.06			0.061	
BECKNER	12.5	SANJUAN-RIOPUERCO 345 kV	0.06	0.067	0.061	0.07	0.066
BECKNER	115	SANJUAN-RIOPUERCO 345 kV	0.06	0.065		0.068	0.064
BEL_AIR	12.5	SANJUAN-RIOPUERCO 345 kV	0.06	0.066		0.069	0.065
BEL_AIR	115	SANJUAN-RIOPUERCO 345 kV	0.06	0.066		0.07	0.065
BELAIR_T	115	SANJUAN-RIOPUERCO 345 kV	0.06	0.066		0.069	0.065
BEV_WOOD	12.5	SANJUAN-RIOPUERCO 345 kV	0.06	0.065		0.069	0.064
BEV_WOOD	115	SANJUAN-RIOPUERCO 345 kV	0.06	0.066		0.069	0.065
BLACKWTR	345	SANJUAN-RIOPUERCO 345 kV	0.06	0.068		0.069	0.064
BLCKRA	12.5	SANJUAN-RIOPUERCO 345 kV	0.06	0.064		0.068	0.063
BLCKRA	115	SANJUAN-RIOPUERCO 345 kV	0.06	0.065		0.068	0.064
BLCKRA_T	115	SANJUAN-RIOPUERCO 345 kV	0.06	0.065		0.068	0.064
BROADWAY	4.16	SANJUAN-RIOPUERCO 345 kV	0.06	0.061		0.065	0.06
BROADWAY	46	SANJUAN-RIOPUERCO 345 kV	0.06	0.06		0.064	
BUCKMAN	12.5	SANJUAN-RIOPUERCO 345 kV	0.06			0.061	
CAMEL_TR	46	SANJUAN-RIOPUERCO 345 kV	0.06	0.065		0.068	0.063
CANYON	12.5	SANJUAN-RIOPUERCO 345 kV	0.06	0.079	0.071	0.083	0.077
CANYON	46	SANJUAN-RIOPUERCO 345 kV	0.06	0.078	0.07	0.082	0.076
CAPITOL	4.16	SANJUAN-RIOPUERCO 345 kV	0.06	0.086	0.077	0.09	0.084
CAPITOL	46	SANJUAN-RIOPUERCO 345 kV	0.06	0.081	0.073	0.085	0.079
CB108	115	SANJUAN-RIOPUERCO 345 kV	0.06	0.066		0.069	0.064
CB108A	115	SANJUAN-RIOPUERCO 345 kV	0.06	0.066		0.069	0.064
CDELRIO	12.5	SANJUAN-RIOPUERCO 345 kV	0.06			0.061	
CDELRIO	115	SANJUAN-RIOPUERCO 345 kV	0.06			0.062	

CENTRALP	12.5	SANJUAN-RIOPUERCO 345 kV	0.06	0.06		0.064	
CENTRALP	115	SANJUAN-RIOPUERCO 345 kV	0.06			0.063	
CG-1	115	SANJUAN-RIOPUERCO 345 kV	0.06	0.063		0.066	0.061
CLAREMNT	12.5	SANJUAN-RIOPUERCO 345 kV	0.06	0.061		0.065	0.06
CLAREMNT	115	SANJUAN-RIOPUERCO 345 kV	0.06	0.064		0.067	0.062
COCHITI	12.5	SANJUAN-RIOPUERCO 345 kV	0.06	0.068	0.061	0.071	0.066
COCHITI	46	SANJUAN-RIOPUERCO 345 kV	0.06	0.065		0.068	0.064
COLINAS	12.5	SANJUAN-RIOPUERCO 345 kV	0.06	0.066	0.06	0.069	0.065
COLINAS	115	SANJUAN-RIOPUERCO 345 kV	0.06	0.068	0.062	0.071	0.067
CORRALB	115	SANJUAN-RIOPUERCO 345 kV	0.06	0.066		0.069	0.065
COTTONWD	12.5	SANJUAN-RIOPUERCO 345 kV	0.06	0.065		0.069	0.064
COTTONWD	115	SANJUAN-RIOPUERCO 345 kV	0.06	0.065		0.069	0.064
COTTONWT	115	SANJUAN-RIOPUERCO 345 kV	0.06	0.065		0.069	0.064
CUCHILLA	4.16	SANJUAN-RIOPUERCO 345 kV	0.06	0.061		0.064	
CUCHILLA	115	SANJUAN-RIOPUERCO 345 kV	0.06	0.064		0.067	0.062
DOWNTOWN	12.5	SANJUAN-RIOPUERCO 345 kV	0.06	0.062		0.065	0.06
DWNTOWN	115	SANJUAN-RIOPUERCO 345 kV	0.06	0.064		0.067	0.063
EAST_TAP	115	SANJUAN-RIOPUERCO 345 kV	0.06	0.064		0.067	0.063
EASTRDGE	12.5	SANJUAN-RIOPUERCO 345 kV	0.06	0.065		0.068	0.063
EASTRDGE	115	SANJUAN-RIOPUERCO 345 kV	0.06	0.064		0.067	0.063
EB-HW	115	SANJUAN-RIOPUERCO 345 kV	0.06	0.066		0.069	0.064
EB-TL	115	SANJUAN-RIOPUERCO 345 kV	0.06	0.064		0.067	0.062
ELDORAD#	115	SANJUAN-RIOPUERCO 345 kV	0.06	0.067	0.061	0.07	0.066
ELDORADO	12.5	SANJUAN-RIOPUERCO 345 kV	0.06	0.066		0.069	0.064
ELDRADOT	115	SANJUAN-RIOPUERCO 345 kV	0.06	0.067	0.061	0.07	0.066
EMBUDO	12.5	SANJUAN-RIOPUERCO 345 kV	0.06	0.063		0.067	0.062
EMBUDO	115	SANJUAN-RIOPUERCO 345 kV	0.06	0.063		0.067	0.062
ENCHNTED	12.5	SANJUAN-RIOPUERCO 345 kV	0.06	0.063		0.066	0.062
ENCHNTED	115	SANJUAN-RIOPUERCO 345 kV	0.06	0.065		0.068	0.063
FOURHILL	12.5	SANJUAN-RIOPUERCO 345 kV	0.06	0.065		0.068	0.063
FOURHILL	115	SANJUAN-RIOPUERCO 345 kV	0.06	0.065		0.068	0.063
FT_MARCY	12.5	SANJUAN-RIOPUERCO 345 kV	0.06	0.083	0.075	0.087	0.081
FT_MARCY	46	SANJUAN-RIOPUERCO 345 kV	0.06	0.08	0.072	0.084	0.078
GALLINAS	12.5	SANJUAN-RIOPUERCO 345 kV	0.06	0.071	0.066	0.075	0.07
GALLINAT	115	SANJUAN-RIOPUERCO 345 kV	0.06	0.073	0.067	0.076	0.072
GIRARD	12.5	SANJUAN-RIOPUERCO 345 kV	0.06	0.063		0.067	0.062
GIRARD	115	SANJUAN-RIOPUERCO 345 kV	0.06	0.063		0.066	0.061
GUADEAST	345	SANJUAN-RIOPUERCO 345 kV	0.06	0.064		0.066	0.061
GUADLUPE	345	SANJUAN-RIOPUERCO 345 kV	0.06	0.063		0.065	0.061
HALONA	4.16	SANJUAN-RIOPUERCO 345 kV	0.06	0.084	0.076	0.088	0.082
HAMILTON	115	SANJUAN-RIOPUERCO 345 kV	0.06	0.064		0.067	0.062
HAMLTN_1	12.5	SANJUAN-RIOPUERCO 345 kV	0.06	0.064		0.067	0.062
HAMLTN_2	12.5	SANJUAN-RIOPUERCO 345 kV	0.06	0.064		0.067	0.062
HAWKINS	12.5	SANJUAN-RIOPUERCO 345 kV	0.06	0.066		0.07	0.065
HAWKINS#	115	SANJUAN-RIOPUERCO 345 kV	0.06	0.064		0.067	0.063
HAZEL_T	46	SANJUAN-RIOPUERCO 345 kV	0.06			0.061	
HAZELDIN	4.16	SANJUAN-RIOPUERCO 345 kV	0.06			0.062	
HAZELDIN	46	SANJUAN-RIOPUERCO 345 kV	0.06			0.061	
HERNANDZ	69	SANJUAN-RIOPUERCO 345 kV	0.06			0.06	
HERNANDZ	115	SANJUAN-RIOPUERCO 345 kV	0.06	0.065	0.061	0.067	0.064

HICKOX	4.16	SANJUAN-RIOPUERCO 345 kV	0.06	0.083	0.075	0.087	0.082
HICKOX	46	SANJUAN-RIOPUERCO 345 kV	0.06	0.081	0.073	0.085	0.079
HW-11	115	SANJUAN-RIOPUERCO 345 kV	0.06	0.066		0.069	0.065
HW-CG	115	SANJUAN-RIOPUERCO 345 kV	0.06	0.066		0.069	0.065
IDEAL	4.16	SANJUAN-RIOPUERCO 345 kV	0.06	0.078	0.07	0.082	0.076
IDEAL	46	SANJUAN-RIOPUERCO 345 kV	0.06	0.074	0.067	0.078	0.072
ID-TA	46	SANJUAN-RIOPUERCO 345 kV	0.06	0.074	0.066	0.078	0.072
INEZ	12.5	SANJUAN-RIOPUERCO 345 kV	0.06	0.063		0.066	0.061
INEZ	115	SANJUAN-RIOPUERCO 345 kV	0.06	0.064		0.067	0.062
IRIS	12.5	SANJUAN-RIOPUERCO 345 kV	0.06	0.065		0.068	0.064
IRIS	115	SANJUAN-RIOPUERCO 345 kV	0.06	0.065		0.069	0.064
IRON_STR	12.5	SANJUAN-RIOPUERCO 345 kV	0.06			0.062	
IRON_STR	46	SANJUAN-RIOPUERCO 345 kV	0.06			0.061	
IRVING	115	SANJUAN-RIOPUERCO 345 kV	0.06	0.065		0.069	0.064
JEFFERSN	4.16	SANJUAN-RIOPUERCO 345 kV	0.06	0.062		0.065	0.061
JEFFERSN	115	SANJUAN-RIOPUERCO 345 kV	0.06	0.064		0.067	0.063
JEFFRSNT	115	SANJUAN-RIOPUERCO 345 kV	0.06	0.064		0.067	0.063
JUANTABO	12.5	SANJUAN-RIOPUERCO 345 kV	0.06	0.064		0.068	0.063
JUANTABO	115	SANJUAN-RIOPUERCO 345 kV	0.06	0.064		0.067	0.062
KAFB	115	SANJUAN-RIOPUERCO 345 kV	0.06	0.062		0.065	0.061
KAISER	2.4	SANJUAN-RIOPUERCO 345 kV	0.06	0.064		0.068	0.063
KAISER	12.5	SANJUAN-RIOPUERCO 345 kV	0.06	0.064		0.068	0.063
KAISER	46	SANJUAN-RIOPUERCO 345 kV	0.06	0.063		0.066	0.062
KAISER_T	46	SANJUAN-RIOPUERCO 345 kV	0.06	0.063		0.066	0.062
KELEHER	4.16	SANJUAN-RIOPUERCO 345 kV	0.06	0.063		0.067	0.062
KELEHER	46	SANJUAN-RIOPUERCO 345 kV	0.06	0.061		0.064	
LA_JARA	69	SANJUAN-RIOPUERCO 345 kV	0.06	0.068	0.061	0.071	0.066
LA_JARA	115	SANJUAN-RIOPUERCO 345 kV	0.06	0.067	0.06	0.071	0.066
LABAJADA	12.5	SANJUAN-RIOPUERCO 345 kV	0.06	0.07	0.063	0.073	0.068
LABAJADA	46	SANJUAN-RIOPUERCO 345 kV	0.06	0.065		0.068	0.064
LAGUNA	12.5	SANJUAN-RIOPUERCO 345 kV	0.06	0.061		0.065	
LAGUNAT	115	SANJUAN-RIOPUERCO 345 kV	0.06	0.063		0.067	
LAWRENC#	115	SANJUAN-RIOPUERCO 345 kV	0.06	0.064		0.068	0.063
LAWRENCE	12.5	SANJUAN-RIOPUERCO 345 kV	0.06	0.066		0.069	0.064
LAWRNCET	115	SANJUAN-RIOPUERCO 345 kV	0.06	0.064		0.068	0.063
LENKURT	12.5	SANJUAN-RIOPUERCO 345 kV	0.06	0.064		0.067	0.063
LENKURT	115	SANJUAN-RIOPUERCO 345 kV	0.06	0.065		0.069	0.064
LEYENDKR	12.5	SANJUAN-RIOPUERCO 345 kV	0.06	0.064		0.068	0.063
LEYENDKR	115	SANJUAN-RIOPUERCO 345 kV	0.06	0.063		0.067	0.062
LOMAS	12.5	SANJUAN-RIOPUERCO 345 kV	0.06	0.065		0.068	0.063
LOMAS	115	SANJUAN-RIOPUERCO 345 kV	0.06	0.064		0.067	0.063
LOMAS_1	12.5	SANJUAN-RIOPUERCO 345 kV	0.06	0.064		0.067	0.062
LOMAS_2	12.5	SANJUAN-RIOPUERCO 345 kV	0.06	0.064		0.067	0.062
LOS_CHAV	12.5	SANJUAN-RIOPUERCO 345 kV	0.06			0.06	
LOS_MOR1	12.5	SANJUAN-RIOPUERCO 345 kV	0.06			0.063	
LOS_MORR	115	SANJUAN-RIOPUERCO 345 kV	0.06			0.062	
LOSANGEL	12.5	SANJUAN-RIOPUERCO 345 kV	0.06	0.063		0.066	0.061
LOSANGEL	115	SANJUAN-RIOPUERCO 345 kV	0.06	0.064		0.067	0.063
LOSLUNAS	12.5	SANJUAN-RIOPUERCO 345 kV	0.06			0.062	
LOSTHRZN	12.5	SANJUAN-RIOPUERCO 345 kV	0.06	0.063		0.066	0.061

LOSTHRZN	115	SANJUAN-RIOPUERCO 345 kV	0.06	0.065		0.069	0.063
LSTHRZNT	115	SANJUAN-RIOPUERCO 345 kV	0.06	0.065		0.069	0.063
LVGT	13.8	SANJUAN-RIOPUERCO 345 kV	0.06	0.071	0.066	0.075	0.07
M_PLAZA	12.5	SANJUAN-RIOPUERCO 345 kV	0.06	0.066		0.07	0.065
M_PLAZA	115	SANJUAN-RIOPUERCO 345 kV	0.06	0.063		0.067	0.062
MANHTTEN	12.5	SANJUAN-RIOPUERCO 345 kV	0.06	0.088	0.079	0.092	0.086
MARIPOSA	12.5	SANJUAN-RIOPUERCO 345 kV	0.06	0.061		0.064	
MARIPOSA	115	SANJUAN-RIOPUERCO 345 kV	0.06	0.063		0.066	0.061
MEJIA	12.5	SANJUAN-RIOPUERCO 345 kV	0.06	0.067	0.06	0.07	0.065
MEJIA	115	SANJUAN-RIOPUERCO 345 kV	0.06	0.064		0.067	0.063
MEJIA_T	115	SANJUAN-RIOPUERCO 345 kV	0.06	0.064		0.067	0.063
MENAUL	12.5	SANJUAN-RIOPUERCO 345 kV	0.06	0.069	0.062	0.073	0.067
MENAUL	115	SANJUAN-RIOPUERCO 345 kV	0.06	0.064		0.067	0.063
MGLLUJAN	12.5	SANJUAN-RIOPUERCO 345 kV	0.06	0.065		0.068	0.064
MGLLUJAN	46	SANJUAN-RIOPUERCO 345 kV	0.06	0.064		0.067	0.063
MGLLUJAN	115	SANJUAN-RIOPUERCO 345 kV	0.06	0.064		0.068	0.063
MONTANO	12.5	SANJUAN-RIOPUERCO 345 kV	0.06	0.063		0.066	0.062
MONTANO	115	SANJUAN-RIOPUERCO 345 kV	0.06	0.063		0.067	0.062
MONTANOT	115	SANJUAN-RIOPUERCO 345 kV	0.06	0.064		0.067	0.062
MORIARTY	69	SANJUAN-RIOPUERCO 345 kV	0.06			0.061	
MORRIS	12.5	SANJUAN-RIOPUERCO 345 kV	0.06	0.063		0.067	0.062
MORRIS	115	SANJUAN-RIOPUERCO 345 kV	0.06	0.064		0.067	0.062
MPLAZA_T	115	SANJUAN-RIOPUERCO 345 kV	0.06	0.063		0.067	0.062
MSSION	115	SANJUAN-RIOPUERCO 345 kV	0.06	0.062		0.066	0.061
MSSION_1	12.5	SANJUAN-RIOPUERCO 345 kV	0.06			0.063	
MSSION_2	12.5	SANJUAN-RIOPUERCO 345 kV	0.06			0.063	
MSSIONT	115	SANJUAN-RIOPUERCO 345 kV	0.06	0.062		0.066	0.061
N_ISLETA	12.5	SANJUAN-RIOPUERCO 345 kV	0.06			0.061	
NO_ALGOD	46	SANJUAN-RIOPUERCO 345 kV	0.06	0.061		0.065	0.06
NO_BERN	12.5	SANJUAN-RIOPUERCO 345 kV	0.06	0.062		0.065	0.06
NO_BERN	115	SANJUAN-RIOPUERCO 345 kV	0.06	0.062		0.066	0.061
NORTH_1	12.5	SANJUAN-RIOPUERCO 345 kV	0.06	0.062		0.065	0.061
NORTH_2	12.5	SANJUAN-RIOPUERCO 345 kV	0.06	0.06		0.064	
NORTHPNM	115	SANJUAN-RIOPUERCO 345 kV	0.06	0.062		0.066	0.061
NORTON_1	115	SANJUAN-RIOPUERCO 345 kV	0.06			0.06	
NORTON_2	115	SANJUAN-RIOPUERCO 345 kV	0.06			0.06	
ORTIZ	12.5	SANJUAN-RIOPUERCO 345 kV	0.06	0.065		0.069	0.064
ORTIZ	115	SANJUAN-RIOPUERCO 345 kV	0.06	0.065		0.069	0.064
PACHMANN	115	SANJUAN-RIOPUERCO 345 kV	0.06	0.065		0.068	0.064
PAGUATE	24.9	SANJUAN-RIOPUERCO 345 kV	0.06			0.061	
PAGUATE	115	SANJUAN-RIOPUERCO 345 kV	0.06			0.06	
PALM	12.5	SANJUAN-RIOPUERCO 345 kV	0.06	0.066		0.069	0.064
PALM_T	115	SANJUAN-RIOPUERCO 345 kV	0.06	0.065		0.068	0.064
PANORAMA	12.5	SANJUAN-RIOPUERCO 345 kV	0.06	0.067	0.06	0.07	0.065
PANORAMA	115	SANJUAN-RIOPUERCO 345 kV	0.06	0.066		0.069	0.064
PANORAMT	115	SANJUAN-RIOPUERCO 345 kV	0.06	0.065		0.069	0.064
PARADIS1	12.5	SANJUAN-RIOPUERCO 345 kV	0.06	0.06		0.064	
PARADIS1	115	SANJUAN-RIOPUERCO 345 kV	0.06	0.065		0.069	0.064
PARADIS2	12.5	SANJUAN-RIOPUERCO 345 kV	0.06	0.062		0.066	0.061
PARADIS2	115	SANJUAN-RIOPUERCO 345 kV	0.06	0.061		0.065	0.06

PECOS	12.5	SANJUAN-RIOPUERCO 345 kV	0.06	0.072	0.065	0.076	0.07
PECOS	46	SANJUAN-RIOPUERCO 345 kV	0.06	0.074	0.067	0.077	0.072
PERALTA	12.5	SANJUAN-RIOPUERCO 345 kV	0.06	0.082	0.074	0.087	0.081
PN-CG	115	SANJUAN-RIOPUERCO 345 kV	0.06	0.063		0.066	0.061
POWRPLNT	12.5	SANJUAN-RIOPUERCO 345 kV	0.06	0.066		0.069	0.065
PRAGER	12.5	SANJUAN-RIOPUERCO 345 kV	0.06	0.064		0.068	0.063
PRAGER	46	SANJUAN-RIOPUERCO 345 kV	0.06			0.063	
PRAGER	115	SANJUAN-RIOPUERCO 345 kV	0.06	0.064		0.067	0.062
PRGRSS	12.5	SANJUAN-RIOPUERCO 345 kV	0.06	0.065		0.068	0.063
PRGRSS	115	SANJUAN-RIOPUERCO 345 kV	0.06	0.065		0.068	0.064
PRINCESS	12.5	SANJUAN-RIOPUERCO 345 kV	0.06	0.065		0.069	0.064
PRINCESS	115	SANJUAN-RIOPUERCO 345 kV	0.06	0.065		0.069	0.064
PY-EL-KL	46	SANJUAN-RIOPUERCO 345 kV	0.06	0.06		0.064	
REEVE_G1	13.8	SANJUAN-RIOPUERCO 345 kV	0.06	0.062		0.066	0.061
REEVE_G2	13.8	SANJUAN-RIOPUERCO 345 kV	0.06	0.062		0.066	0.061
REEVES	12.5	SANJUAN-RIOPUERCO 345 kV	0.06			0.062	
REEVES_1	115	SANJUAN-RIOPUERCO 345 kV	0.06	0.064		0.067	0.062
REEVES_2	115	SANJUAN-RIOPUERCO 345 kV	0.06			0.063	
RIOHONDO	12.5	SANJUAN-RIOPUERCO 345 kV	0.06	0.066		0.07	0.065
RIOHONDO	115	SANJUAN-RIOPUERCO 345 kV	0.06	0.066		0.069	0.064
RIOPUERC	115	SANJUAN-RIOPUERCO 345 kV	0.06	0.062		0.065	0.061
RIOPUERC	345	SANJUAN-RIOPUERCO 345 kV	0.06			0.061	
RODEO	12.5	SANJUAN-RIOPUERCO 345 kV	0.06	0.068	0.062	0.071	0.067
RODEO_T	115	SANJUAN-RIOPUERCO 345 kV	0.06	0.065		0.068	0.064
ROWE	24.9	SANJUAN-RIOPUERCO 345 kV	0.06	0.083	0.076	0.087	0.081
ROWE_TAP	115	SANJUAN-RIOPUERCO 345 kV	0.06	0.072	0.066	0.075	0.07
ROY	12.5	SANJUAN-RIOPUERCO 345 kV	0.06			0.06	
ROY	115	SANJUAN-RIOPUERCO 345 kV	0.06			0.063	
RR_TAP	115	SANJUAN-RIOPUERCO 345 kV	0.06	0.065		0.069	0.064
S._ANTON	46	SANJUAN-RIOPUERCO 345 kV	0.06	0.075	0.068	0.079	0.074
S.ANTON1	12.5	SANJUAN-RIOPUERCO 345 kV	0.06	0.081	0.073	0.086	0.08
S.ANTON2	12.5	SANJUAN-RIOPUERCO 345 kV	0.06	0.078	0.071	0.083	0.077
S.JOSEPH	12.5	SANJUAN-RIOPUERCO 345 kV	0.06	0.063		0.067	0.062
S.JOSEPH	115	SANJUAN-RIOPUERCO 345 kV	0.06	0.064		0.067	0.063
S_DOMING	12.5	SANJUAN-RIOPUERCO 345 kV	0.06	0.066		0.069	0.064
S_DOMING	46	SANJUAN-RIOPUERCO 345 kV	0.06	0.063		0.066	0.062
SAN_CLEM	12.5	SANJUAN-RIOPUERCO 345 kV	0.06			0.062	
SANDIA	345	SANJUAN-RIOPUERCO 345 kV	0.06	0.063		0.066	0.061
SANDIA_1	46	SANJUAN-RIOPUERCO 345 kV	0.06	0.066	0.06	0.07	0.065
SANDIA_1	115	SANJUAN-RIOPUERCO 345 kV	0.06	0.065		0.068	0.063
SANDIA_2	46	SANJUAN-RIOPUERCO 345 kV	0.06	0.069	0.062	0.073	0.067
SANDIA_2	115	SANJUAN-RIOPUERCO 345 kV	0.06	0.065		0.068	0.063
SANDIAK5	115	SANJUAN-RIOPUERCO 345 kV	0.06	0.065		0.068	0.063
SANPEDRO	12.5	SANJUAN-RIOPUERCO 345 kV	0.06	0.066		0.069	0.064
SANPEDRO	115	SANJUAN-RIOPUERCO 345 kV	0.06	0.066		0.069	0.065
SANTA_FE	46	SANJUAN-RIOPUERCO 345 kV	0.06	0.065		0.068	0.063
SARA_CS	115	SANJUAN-RIOPUERCO 345 kV	0.06	0.066		0.069	0.065
SARA_CT	115	SANJUAN-RIOPUERCO 345 kV	0.06	0.066		0.069	0.065
SARA_RD1	12.5	SANJUAN-RIOPUERCO 345 kV	0.06	0.065		0.068	0.063
SARA_RD2	12.5	SANJUAN-RIOPUERCO 345 kV	0.06	0.066		0.07	0.065

SARA_RD3	12.5	SANJUAN-RIOPUERCO 345 kV	0.06	0.065		0.069	0.064
SARA_RD4	12.5	SANJUAN-RIOPUERCO 345 kV	0.06	0.065		0.069	0.064
SARA_RD5	12.5	SANJUAN-RIOPUERCO 345 kV	0.06	0.065		0.069	0.064
SARA_RD6	12.5	SANJUAN-RIOPUERCO 345 kV	0.06	0.065		0.069	0.064
SARA_RD7	12.5	SANJUAN-RIOPUERCO 345 kV	0.06	0.065		0.069	0.064
SARA_RD8	12.5	SANJUAN-RIOPUERCO 345 kV	0.06	0.065		0.069	0.064
SFSEWER	46	SANJUAN-RIOPUERCO 345 kV	0.06	0.064		0.067	0.063
SHELLTAP	115	SANJUAN-RIOPUERCO 345 kV	0.06	0.064		0.067	0.062
SIGNET_2	12.5	SANJUAN-RIOPUERCO 345 kV	0.06	0.066		0.069	0.064
SIGNET_T	115	SANJUAN-RIOPUERCO 345 kV	0.06	0.064		0.067	0.063
SIGNETIC	12.5	SANJUAN-RIOPUERCO 345 kV	0.06	0.066		0.069	0.064
SIGNETIC	115	SANJUAN-RIOPUERCO 345 kV	0.06	0.064		0.068	0.063
SNFELIPE	12.5	SANJUAN-RIOPUERCO 345 kV	0.06	0.062		0.066	0.061
SNFELIPE	46	SANJUAN-RIOPUERCO 345 kV	0.06	0.062		0.065	0.061
SNYSIDRO	69	SANJUAN-RIOPUERCO 345 kV	0.06	0.065		0.069	0.064
SNYSIDRO	115	SANJUAN-RIOPUERCO 345 kV	0.06	0.064		0.068	0.063
SOCORROP	24.9	SANJUAN-RIOPUERCO 345 kV	0.06			0.06	
SOCORROP	69	SANJUAN-RIOPUERCO 345 kV	0.06			0.061	
SP-83	115	SANJUAN-RIOPUERCO 345 kV	0.06	0.065		0.069	0.064
SPACHCO2	12.5	SANJUAN-RIOPUERCO 345 kV	0.06	0.069	0.062	0.072	0.067
SPACHECO	12.5	SANJUAN-RIOPUERCO 345 kV	0.06	0.068	0.062	0.071	0.067
SPACHECO	115	SANJUAN-RIOPUERCO 345 kV	0.06	0.066		0.069	0.064
SPEDRO_T	115	SANJUAN-RIOPUERCO 345 kV	0.06	0.066		0.069	0.065
STATEPEN	12.5	SANJUAN-RIOPUERCO 345 kV	0.06	0.065		0.068	0.063
STATEPEN	115	SANJUAN-RIOPUERCO 345 kV	0.06	0.065		0.068	0.064
STORRIE	69	SANJUAN-RIOPUERCO 345 kV	0.06	0.073	0.068	0.077	0.072
STORRIE	115	SANJUAN-RIOPUERCO 345 kV	0.06	0.072	0.067	0.076	0.071
TAIBANMS	345	SANJUAN-RIOPUERCO 345 kV	0.06	0.066		0.068	0.063
THOMAS	12.5	SANJUAN-RIOPUERCO 345 kV	0.06	0.063		0.066	0.061
THOMAS	115	SANJUAN-RIOPUERCO 345 kV	0.06	0.064		0.067	0.062
TIJERAS	12.5	SANJUAN-RIOPUERCO 345 kV	0.06	0.081	0.073	0.085	0.079
TIJERAS	46	SANJUAN-RIOPUERCO 345 kV	0.06	0.074	0.067	0.078	0.072
TL-1	115	SANJUAN-RIOPUERCO 345 kV	0.06	0.063		0.067	0.062
TRAMWAY	12.5	SANJUAN-RIOPUERCO 345 kV	0.06	0.065		0.068	0.063
TRAMWAY	115	SANJUAN-RIOPUERCO 345 kV	0.06	0.062		0.066	0.061
TRUMAN	12.5	SANJUAN-RIOPUERCO 345 kV	0.06	0.065		0.069	0.064
TRUMAN	115	SANJUAN-RIOPUERCO 345 kV	0.06	0.065		0.069	0.064
TRUMAN_T	115	SANJUAN-RIOPUERCO 345 kV	0.06	0.065		0.069	0.064
UNSER	12.5	SANJUAN-RIOPUERCO 345 kV	0.06	0.064		0.067	0.063
UNSER	115	SANJUAN-RIOPUERCO 345 kV	0.06	0.064		0.068	0.063
VALENCIA	46	SANJUAN-RIOPUERCO 345 kV	0.06	0.072	0.066	0.075	0.071
VALENCIA	115	SANJUAN-RIOPUERCO 345 kV	0.06	0.073	0.067	0.077	0.072
VERANDA	12.5	SANJUAN-RIOPUERCO 345 kV	0.06	0.066		0.07	0.065
VERANDAT	115	SANJUAN-RIOPUERCO 345 kV	0.06	0.065		0.068	0.064
VOLCANO	115	SANJUAN-RIOPUERCO 345 kV	0.06			0.063	
VOLCANO1	12.5	SANJUAN-RIOPUERCO 345 kV	0.06			0.061	
VOLCANO2	12.5	SANJUAN-RIOPUERCO 345 kV	0.06			0.061	
VOLCANOT	115	SANJUAN-RIOPUERCO 345 kV	0.06			0.063	
WARNER	12.5	SANJUAN-RIOPUERCO 345 kV	0.06	0.066	0.06	0.07	0.065
WARNER	46	SANJUAN-RIOPUERCO 345 kV	0.06	0.064		0.068	0.063

WAYNE 1	12.5	SANJUAN-RIOPUERCO 345 kV	0.06			0.062	
WAYNE 1	115	SANJUAN-RIOPUERCO 345 kV	0.06			0.063	
WAYNE 2	12.5	SANJUAN-RIOPUERCO 345 kV	0.06	0.062		0.065	0.061
WAYNE 2	115	SANJUAN-RIOPUERCO 345 kV	0.06	0.064		0.068	0.063
WESTMESA	230	SANJUAN-RIOPUERCO 345 kV	0.06	0.064		0.067	0.063
WESTMESA	345	SANJUAN-RIOPUERCO 345 kV	0.06	0.063		0.066	0.062
WESTMS_1	115	SANJUAN-RIOPUERCO 345 kV	0.06	0.064		0.068	0.063
WESTMS_2	115	SANJUAN-RIOPUERCO 345 kV	0.06	0.064		0.067	0.063
WESTMS_3	115	SANJUAN-RIOPUERCO 345 kV	0.06	0.064		0.068	0.063
WINROCK	12.5	SANJUAN-RIOPUERCO 345 kV	0.06	0.067	0.061	0.071	0.066
WINROCK	115	SANJUAN-RIOPUERCO 345 kV	0.06	0.066		0.069	0.064
WYOMING	12.5	SANJUAN-RIOPUERCO 345 kV	0.06	0.063		0.067	0.062
WYOMING	115	SANJUAN-RIOPUERCO 345 kV	0.06	0.061		0.064	
ZAFARANO	12.5	SANJUAN-RIOPUERCO 345 kV	0.06	0.064		0.067	0.063
ZAFARANT	115	SANJUAN-RIOPUERCO 345 kV	0.06	0.064		0.067	0.063
ZAMORA	12.5	SANJUAN-RIOPUERCO 345 kV	0.06	0.079	0.071	0.083	0.077
ZAMORA	46	SANJUAN-RIOPUERCO 345 kV	0.06	0.074	0.067	0.078	0.073
ZAMORA_T	46	SANJUAN-RIOPUERCO 345 kV	0.06	0.074	0.067	0.078	0.072
ZIA_1	46	SANJUAN-RIOPUERCO 345 kV	0.06	0.064		0.067	0.062
ZIA_1	115	SANJUAN-RIOPUERCO 345 kV	0.06	0.065		0.068	0.064
ZIA_2	46	SANJUAN-RIOPUERCO 345 kV	0.06	0.072	0.065	0.075	0.07
ZIA_2	115	SANJUAN-RIOPUERCO 345 kV	0.06	0.065		0.068	0.064

XXXXX
Milan Biomass-Solar Generation Project

System Impact Study

(OASIS # IA-PNM-2007-15)

April 2009

Prepared by:
Electric Power Research Institute (EPRI)

Under contract with:
Public Service Company of New Mexico

Electric Services
Transmission Operations

Foreword

This report was prepared for XXXXX ("Interconnection Customer") by the Electric Power Research Institute ("EPRI"), pursuant to a consulting contract with Public Service Company of New Mexico ("PNM") Transmission Operations.

This document was prepared by EPRI for PNM. Neither EPRI, PNM, any member of EPRI, any cosponsor, nor any person acting on behalf of any of them:

(a) makes any warranty or representation whatsoever, express or implied, (i) with respect to the use of any information, apparatus, method, process, or similar item disclosed in this document, including merchantability and fitness for a particular purpose, or (ii) that such use does not infringe on or interfere with privately owned rights, including any party's intellectual property, or (iii) that this document is suitable to any particular user's circumstance; or

(b) assumes responsibility for any damages or other liability whatsoever (including any consequential damages, even if EPRI or any EPRI representative or PNM or any PNM representative has been advised of the possibility of such damages) resulting from your selection or use of this document or any information, apparatus, method, process, or similar item disclosed in this document.

Any correspondence concerning this document, including technical and commercial questions should be referred to:

Jeff Mechenbier
Director, Transmission/Distribution Planning and Contracts
Public Service Company of New Mexico
Alvarado Square MS-0604
Albuquerque, NM 87158
Phone: (505) 241-4582
Fax: (505) 241-4363

Table of Contents

1 INTRODUCTION 4

2 STUDY CRITERIA 4

2.1 TRANSIENT STABILITY PERFORMANCE STANDARD 4
2.2 VOLTAGE RIDE-THROUGH REQUIREMENT 4

3 BASE CASE DEVELOPMENT 5

3.1 GENERATION DISPATCH 5
3.2 PROJECT REPRESENTATION 6
3.3 GENERATION DISPLACEMENT METHODOLOGY 7

4 LIST OF CONTINGENCIES 7

5 STABILITY ANALYSIS 8

5.1 NETWORK RESOURCE 8
5.2 ENERGY RESOURCE 9

6 CONCLUSION 9

APPENDIX A: TRANSIENT STABILITY RESULTS 11

Table of Figures

FIGURE 1 – PROJECT INTERCONNECTION 6

Table of Tables

TABLE 1 – BASE-LINE GENERATION PATTERN 5
TABLE 2 – LIST OF CONTINGENCIES FOR STABILITY ANALYSIS 8

1 Introduction

On November 13, 2007, XXXXX ("Interconnection Customer") perfected a request to interconnect a 42.6 MVA, 0.9 pf biomass generating unit with an additional 5 MW photovoltaic unit ("Project") to Public Service Company of New Mexico's ("PNM") transmission system in Cibola County, New Mexico. The proposed Project Point of Interconnection ("POI") is on the Bluewater – West Mesa 115 kV ("BW") line, approximately 3 miles from Bluewater towards Grants Tap. The projected in-service date is June 2011.

A Feasibility Study[1] had previously been performed for the Project, evaluating it as a Network Resource and an Energy Resource. Steady-state thermal and voltage and short circuit impacts were considered for the Feasibility Study. Based upon the results of this study, the Project developer has since elected to proceed with a System Impact Study (SIS). The objective of this study is to evaluate stability impacts of the Project, considering the Project as both a Network Resource and an Energy Resource.

2 Study Criteria

2.1 Transient Stability Performance Standard

The NERC/WECC transient stability performance requirements for transmission contingencies are as follows:

- All machines will remain in synchronism.
- All voltage swings will be well damped.
- Following fault clearing for single contingencies, voltage on load buses may not dip more than 25% of the pre-fault voltage or dip more than 20% of the pre-fault voltage for more than 20 cycles. For N-2 and breaker failure contingencies, voltage on load buses may not dip more than 30% of the pre-fault voltage or dip more than 20% of the pre-fault voltage for more than 40 cycles.

2.2 Voltage Ride-Through Requirement

Generators connected to the PNM transmission system are required to meet the voltage ride-through requirements contained in Appendix G to the Pro-forma Large-Generator Interconnection Agreement[2]. Generators are required to withstand 3-phase faults (clearing time

[1] OASIS # IA-PNM-2007-15, Milan Biomass-Solar Generation Project Interconnection Feasibility Study, September 2008

[2] See Open Access Transmission Tariff ("OATT") of Public Service Company of New Mexico located in the Folder titled "Tariff" http://www.oatioasis.com/pnm/index.html

up to 9 cycles) and single-line-to-ground faults at the Point of Interconnection (POI). Generators are also required to remain connected to the system during the voltage recovery period.

3 Base Case Development

A WECC 2012 heavy summer case (12HS2A) was used to develop the base cases. Generation dispatch, transmission scenarios and the Project were added as discussed below.

3.1 Generation Dispatch

Proposed generation projects in the local area holding a senior position in PNM's Generator Interconnection Queue, and their respective transmission system reinforcements, are included in the base cases. Certain existing or proposed projects outside the study area, which do not have an impact on the Project, are excluded or were not dispatched. Table 1 shows the generation pattern for existing and proposed generation projects.

Table 1 – Base-line generation pattern

Unit	Nameplate MW Rating	MW Output Level
Existing Reeves 1	44	0
Existing Reeves 2	43	0
Existing Reeves 3	67	66
Existing Delta-Person	139	80
Existing Valencia Energy Facility	143	0
Existing Taiban Mesa Wind Project **	200	0
Existing Aragonne Mesa Wind project *	200	0
Proposed McKinley Wind Project	102	102
Proposed Torrance Biomass Project	37.5	37.5
Proposed Torrance Wind Project **	100	0
Proposed Eastern and Northern N.M. Projects**		0
Proposed Albuquerque area Projects **		0

* 90 MW has been developed to date.
** These projects are outside the study area and do not have an effect on the Study.

In both the heavy summer and light summer base cases, the Southern New Mexico Import (SNMI) level is approximately 355 MW in the import direction, while the Northern New Mexico Import (NNMI) is approximately 1800 MW. The Arroyo Phase Shifting Transformer (PST) is scheduled at 60 MW southbound. The Blackwater HVDC converter is scheduled at 50 MW Westbound.

3.2 Project Representation

The basecases used in the previous Feasibility Study, which are based on the WECC 2012 heavy summer case (12HS2A) were used to develop appropriate basecases for the SIS analysis. The Project POI is at the Milan 115kV station, as shown in Figure 1.

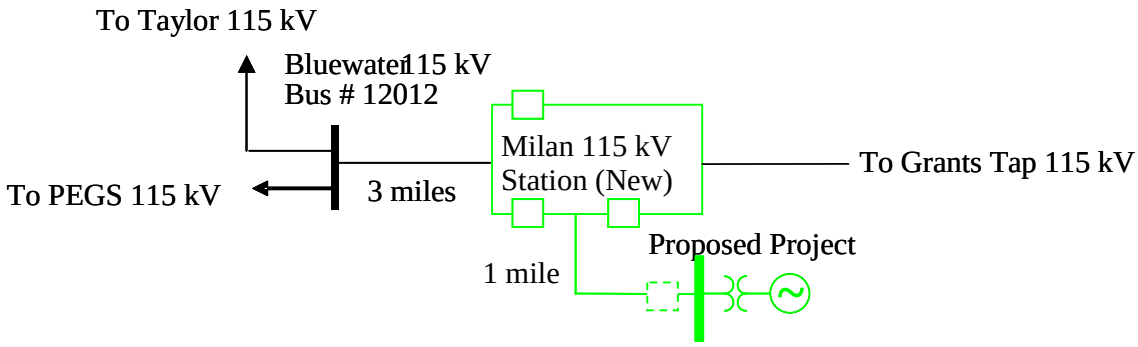

Figure 1 – Project Interconnection

In the figures above, existing 115 kV transmission facilities are shown in black. The project facilities are shown in green.

Per the Feasibility Study, the parameters used for representing the Project in load flow are shown below:

Generator Data

Biomass Generator

Nameplate rating:	*42.588 MVA rating*
Net Plant Output:	*35.5 MW summer, 36.7 MW winter (use winter output for study)*
Reactive:	*Rated power factor: 0.90 (lag) 0.95 (lead)*
Terminal voltage:	*13.8 kV*

PV unit

Nameplate rating:	*5 MW*
Net Plant Output:	*5 MW*
Reactive:	*Rated power factor: 1.0*
Terminal voltage:	*13.8 kV (model at same bus as biomass generator)*

Station step up transformer

Rating:	*50/62.5/75 MVA*
Voltage Ratio	*13.8 / 115 kV*
Impedance	*R = 0.007, X =0.07 p.u. on 50 MVA base*

Interconnection line

Assume 1 mile 115 kV line (R = 0.00278, X = 0.00576, B=0.00067pu on 100 MVA base)

For dynamics, the 5 MW PV unit is modeled as a negative constant power load. This is a significant simplification since there were no dynamic models available for this inverter technology at the time of the study. While modeling the PV unit as a constant power load provides a more pessimistic response, for future work it would be beneficial to have a more representative model of such inverters especially if large amounts of such devices are to be deployed in the system.

The Biomass generator is modeled as a synchronous generator with separate governor and excitation controls as provided by PNM.

As identified in the Feasibility Study, the Project meets PNM's power factor requirements at the POI, provided that the biomass generator's reactive capabilities are as stated in the Milan application, i.e. 0.90 pf lagging (overexcited) to 0.95 pf leading (underexcited). This assumes that the PV portion of the project operates at unity power factor. However, based on the machine capability curve provided with the interconnection application, the core end heating limit may restrict the machine's leading (underexcited) power factor range to a lower level.

For the stability analysis, it is assumed the project meets PNM's power factor requirements, and provided 0.90 lagging to 0.95 leading power factor.

3.3 Generation Displacement Methodology

For the purposes of the NR analysis, the Project output is assumed to displace generation at San Juan generating station.

For the purposes of the ER analysis, it is assumed that the output of the Project can displace existing and/or proposed generation resources, whether or not they are PNM Network Resources or seek such designation. In general, the generators that are displaced by the Project are selected such that the Project's ability to inject power into the system is maximized. The ER analysis does not attempt to assess whether the dispatch scenarios studied represent conditions that exist for any significant period of time.

4 List of Contingencies

The contingencies evaluated in the study are listed in Table 2 below. All three-phase (3-P) faults with normal clearing times are cleared at 4 cycles, while the breaker failure cases utilize backup clearing times of 12 cycles (345 and 230kV) and 15 cycles (115kV).

Table 2 – List of Contingencies for Stability Analysis

Disturbance Case #	Disturbance	Code	Fault Location	Fault Type
1	Four Corners-West Mesa 345 kV	FW	West Mesa 345 kV	3-P
2	San Juan-Rio Puerco 345 kV	WW	Rio Puerco 345 kV	3-P
3	Bluewater-Ambrosia 115 kV	MB	Bluewater 115 kV	3-P
4	Bluewater-PEGS 115 kV	TSGT1	Bluewater 115 kV	3-P
5	Bluewater-Milan 115 kV	BW1	Bluewater 115 kV	3-P
6	Milan-West Mesa 115 kV	BW2	Milan 115 kV	3-P
7	PEGS-Yahtahey 115 kV	TSGT2	PEGS 115 kV	3-P
8	PEGS-Ambrosia 230 kV	TSGT3	PEGS 230 kV	3-P
9	West Mesa-Ambrosia 230 kV	WA1	West Mesa 230 kV	3-P
10	West Mesa-MKCOWIND 115 kV	KM	West Mesa 115 kV	3-P
11	1-P fault on West Mesa-Ambrosia 230 kV; breaker failure at Ambrosia 230 kV; Open Ambrosia-Bisti 230kV	WA1	West Mesa 230 kV	1-P
12	1-P fault on West Mesa-Ambrosia 230 kV; breaker failure at Ambrosia 230 kV; Open Ambrosia-PEGS 230kV	WA2	West Mesa 230 kV	1-P

5 Stability Analysis

For the stability analysis, the Project output was set at the full output and evaluated for impact on system stability. Transient stability simulation plots are included in Appendix A. The nomenclature used to label the figures in Appendix A is as follows:

<type>-<fault description>- <basecase>

where

<type> is either *3p* (a 4-cycle three phase fault) or *1p* (a 12-cycle single-line-to-ground fault)

<fault-description> corresponds to the contingency code shown in Table 2

<basecase> is either the heavy summer case, pnm-wnm_milan_on-dyn.sav or the light summer case, pnm-wnm_60pct_milan_on.sav

5.1 Network Resource

For the contingencies evaluated, the results indicate that the Project does not result in system instability. For all single line-to-ground faults, load voltages do not drop more than 20% of the

pre-fault voltage for more than 20 cycles, and all voltages recover to within 75% of pre-disturbance levels immediately following fault clearing.

For balanced three-phase faults, no voltages are found to dip more than 20% of the pre-fault voltage for more than 20 cycles. For most cases, voltages recover to within 75% of pre-disturbance levels within a few cycles of fault clearing. The exceptions to this are the following contingencies that result in the majority of voltages in the PNM area falling below 25% of pre-disturbance levels:

- FW, fault at West Mesa 345kV
- WW, fault at Rio Puerco 345kV
- KM, fault at West Mesa 115kV

These voltage violations are found to be pre-existing, with the Project having minimal impact.

5.2 Energy Resource

As found in the Network Resource Analysis, the full Project output can be accommodated without violating stability criteria. No modifications are necessary to consider the Project as an Energy Resource, and the Project capacity can be accepted as an Energy Resource without violating stability criteria for the particular generation displacement assumptions used in the analysis.

6 Conclusion

The stability analysis indicates the Project meets the NERC/WECC transient stability performance requirements. Stability analysis was performed with the Project, and all machines were found to remain in synchronism, and all voltage swings were well damped.

For all single line-to-ground faults, load voltages do not drop more than 20% of the pre-fault voltage for more than 20 cycles, and all voltages recover to within 75% of pre-disturbance levels immediately following fault clearing.

For balanced three-phase faults, no voltages are found to dip more than 20% of the pre-fault voltage for more than 20 cycles. For most cases, voltages recover to within 75% of pre-disturbance levels within a few cycles of fault clearing. There are a few exceptions to this case, however these voltage violations are found to be pre-existing with the project having minimal impact.

As per the Network Resource Analysis, the full Project capacity can be accommodated without violating any stability performance criteria.

As identified in the Feasibility Study, the Project meets PNM's power factor requirements at the POI, provided that the biomass generator's reactive capabilities are as stated in the Milan application, i.e. 0.90 pf lagging (overexcited) to 0.95 pf leading (underexcited). This assumes that the PV portion of the project operates at unity power factor. However, based on the machine capability curve provided with the interconnection application, the core end heating limit may restrict the machine's leading (underexcited) power factor range to a lower level.

For the stability analysis, it is assumed the project meets PNM's power factor requirements, and provides 0.90 lagging to 0.95 leading power factor.

This analysis is in addition to findings in the Feasibility Study. The Feasibility Study identified system improvements with an estimated cost of $12.1 million. No additional improvements are identified in this analysis.

Appendix A: Transient Stability Results

The transient stability plots for select cases defined in Table 2 are provided below, specifically WW, FW, and KM. For each contingency the following terminal voltages and angles are plotted:

- SJUAN G1
- PEGS1
- PERSONG1
- LEF_S1
- REEVE_G3
- MILAN

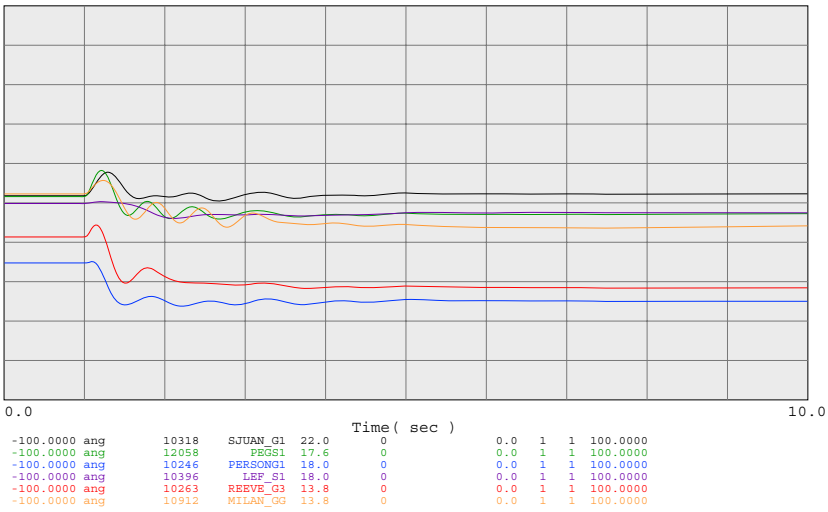

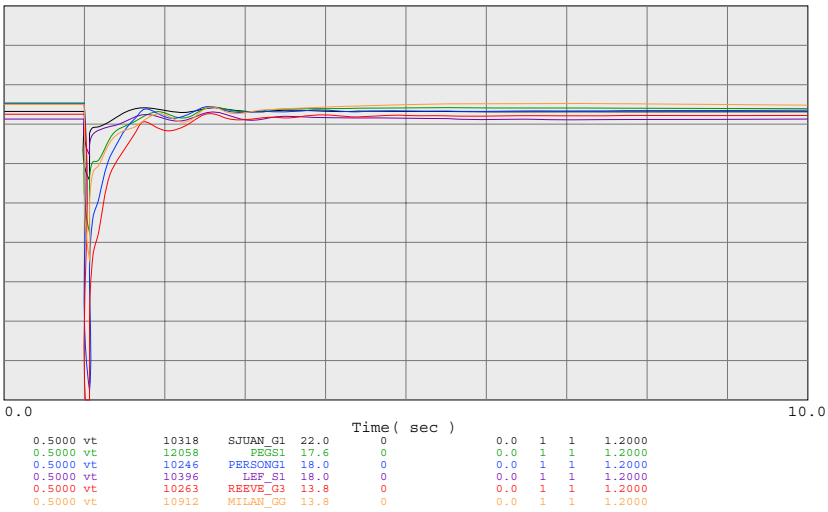

WESTERN ELECTRICITY COORDINATING COUNCIL
12HS2A BENCHMARK CASE WITH NO Z PROJECT, ARR PST = 60 MW N-S
3-Phase fault on San Juan-Rio Puerco 345 kV line at Rio Puerco
Trip San Juan-Rio Puerco line in 4 cycles

Page 1

	3p-WW-pnm-wnm_milan_on-dyn.chf	c:\psas\milan\psas Fri Mar 20 08:57:22 2009

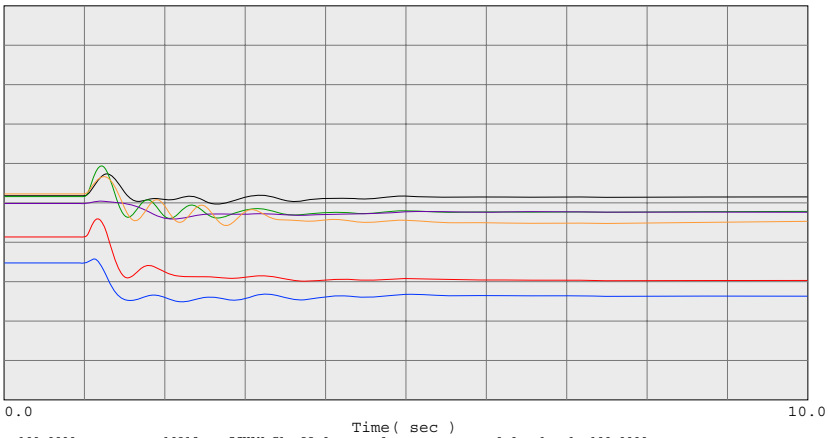

-100.0000 ang	10318	SJUAN_G1	22.0	0	0.0	1	1	100.0000
-100.0000 ang	12058	PEGS1	17.6	0	0.0	1	1	100.0000
-100.0000 ang	10246	PERSONG1	18.0	0	0.0	1	1	100.0000
-100.0000 ang	10396	LEF_S1	18.0	0	0.0	1	1	100.0000
-100.0000 ang	10263	REEVE_G3	13.8	0	0.0	1	1	100.0000
-100.0000 ang	10912	MILAN_GG	13.8	0	0.0	1	1	100.0000

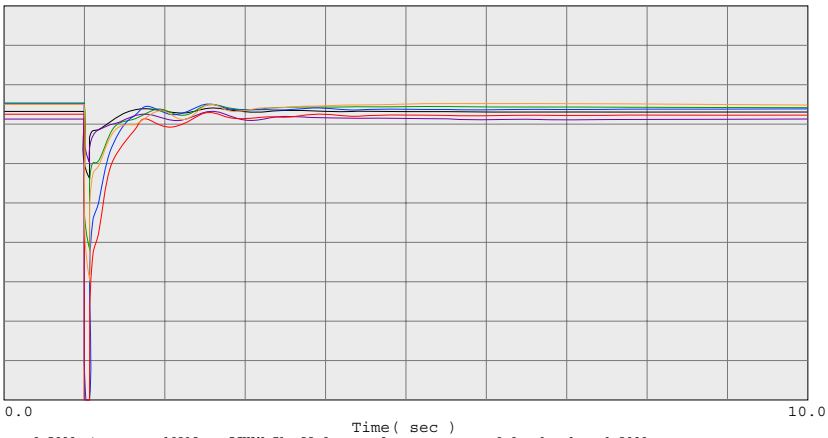

0.5000 vt	10318	SJUAN_G1	22.0	0	0.0	1	1	1.2000
0.5000 vt	12058	PEGS1	17.6	0	0.0	1	1	1.2000
0.5000 vt	10246	PERSONG1	18.0	0	0.0	1	1	1.2000
0.5000 vt	10396	LEF_S1	18.0	0	0.0	1	1	1.2000
0.5000 vt	10263	REEVE_G3	13.8	0	0.0	1	1	1.2000
0.5000 vt	10912	MILAN_GG	13.8	0	0.0	1	1	1.2000

WESTERN ELECTRICITY COORDINATING COUNCIL
12HS2A BENCHMARK CASE WITH NO Z PROJECT, ARR PST = 60 MW N-S
3-Phase fault on Four Corners-West Mesa 345 kV line at West Mesa 345
Trip Four Corners-West Mesa line in 4 cycles

Page 1

	3p-FW-pnm-wnm_milan_on-dyn.chf	c:\psas\milan\psas Fri Mar 20 08:57:25 2009

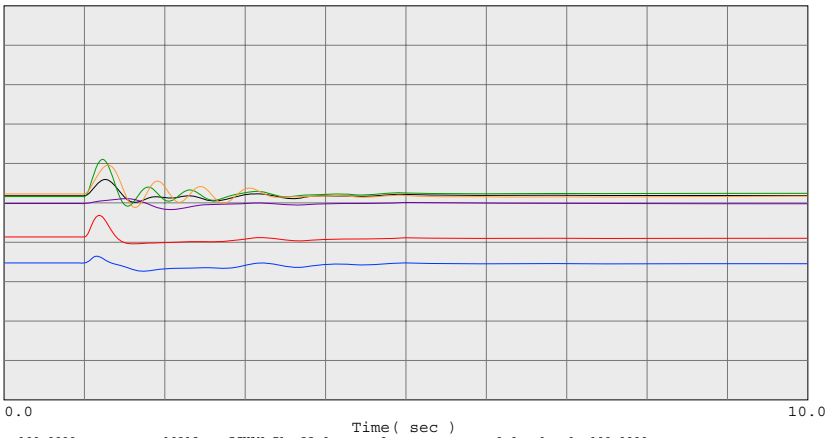

-100.0000 ang	10318	SJUAN_G1	22.0	0	0.0	1	1	100.0000
-100.0000 ang	12058	PEGS1	17.6	0	0.0	1	1	100.0000
-100.0000 ang	10246	PERSONG1	18.0	0	0.0	1	1	100.0000
-100.0000 ang	10396	LEF_S1	18.0	0	0.0	1	1	100.0000
-100.0000 ang	10263	REEVE_G3	13.8	0	0.0	1	1	100.0000
-100.0000 ang	10912	MILAN_GG	13.8	0	0.0	1	1	100.0000

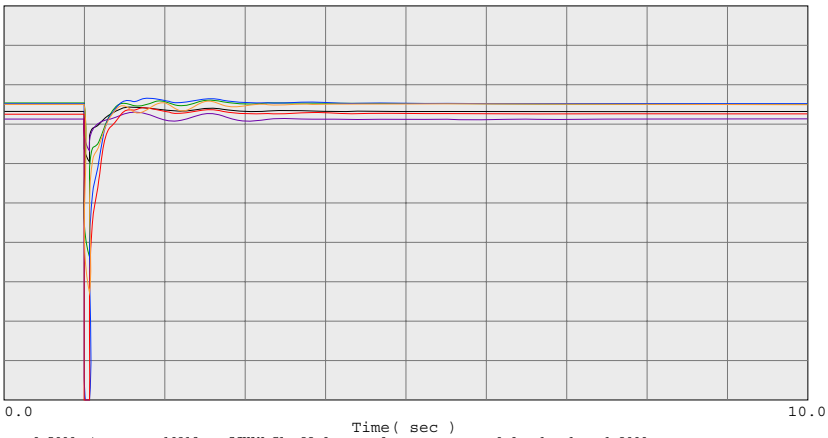

0.5000 vt	10318	SJUAN_G1	22.0	0	0.0	1	1	1.2000
0.5000 vt	12058	PEGS1	17.6	0	0.0	1	1	1.2000
0.5000 vt	10246	PERSONG1	18.0	0	0.0	1	1	1.2000
0.5000 vt	10396	LEF_S1	18.0	0	0.0	1	1	1.2000
0.5000 vt	10263	REEVE_G3	13.8	0	0.0	1	1	1.2000
0.5000 vt	10912	MILAN_GG	13.8	0	0.0	1	1	1.2000

WESTERN ELECTRICITY COORDINATING COUNCIL
12HS2A BENCHMARK CASE WITH NO Z PROJECT, ARR PST = 60 MW N-S
3-Phase fault on West Mesa-MKCOWIND 115 kV at West Mesa 115
Trip West Mesa-MKCOWIND 115 kV in 4 cycles

Page 1

	3p-KM-pnm-wnm_milan_on-dyn.chf	c:\psas\milan\psas Fri Mar 20 08:57:33 2009

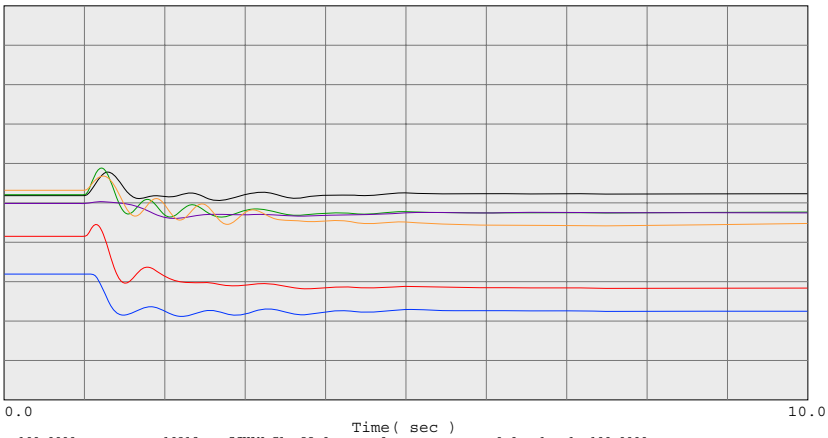

-100.0000 ang	10318	SJUAN_G1	22.0	0	0.0	1	1	100.0000
-100.0000 ang	12058	PEGS1	17.6	0	0.0	1	1	100.0000
-100.0000 ang	10246	PERSONG1	18.0	0	0.0	1	1	100.0000
-100.0000 ang	10396	LEF_S1	18.0	0	0.0	1	1	100.0000
-100.0000 ang	10263	REEVE_G3	13.8	0	0.0	1	1	100.0000
-100.0000 ang	10912	MILAN_GG	13.8	0	0.0	1	1	100.0000

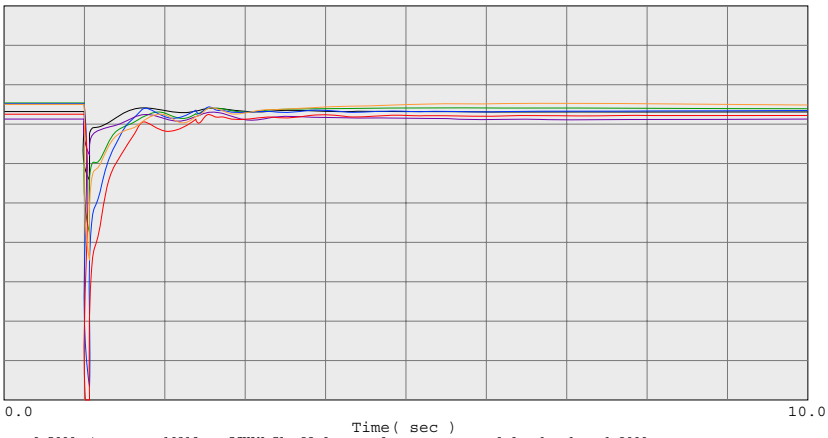

0.5000 vt	10318	SJUAN_G1	22.0	0	0.0	1	1	1.2000
0.5000 vt	12058	PEGS1	17.6	0	0.0	1	1	1.2000
0.5000 vt	10246	PERSONG1	18.0	0	0.0	1	1	1.2000
0.5000 vt	10396	LEF_S1	18.0	0	0.0	1	1	1.2000
0.5000 vt	10263	REEVE_G3	13.8	0	0.0	1	1	1.2000
0.5000 vt	10912	MILAN_GG	13.8	0	0.0	1	1	1.2000

WESTERN ELECTRICITY COORDINATING COUNCIL
12HS2A BENCHMARK CASE WITH NO Z PROJECT, ARR PST = 60 MW N-S
3-Phase fault on San Juan-Rio Puerco 345 kV line at Rio Puerco
Trip San Juan-Rio Puerco line in 4 cycles

Page 1

	3p-WW-pnm-wnm_60pct_milan_on-dyn.chf	c:\psas\milan\psas Fri Mar 20 08:57:35 2009

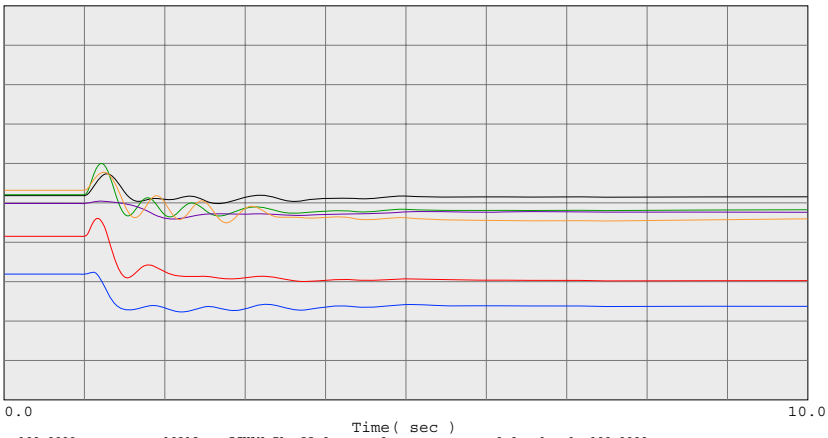

-100.0000 ang	10318	SJUAN_G1	22.0	0	0.0	1	1	100.0000
-100.0000 ang	12058	PEGS1	17.6	0	0.0	1	1	100.0000
-100.0000 ang	10246	PERSONG1	18.0	0	0.0	1	1	100.0000
-100.0000 ang	10396	LEF_S1	18.0	0	0.0	1	1	100.0000
-100.0000 ang	10263	REEVE_G3	13.8	0	0.0	1	1	100.0000
-100.0000 ang	10912	MILAN_GG	13.8	0	0.0	1	1	100.0000

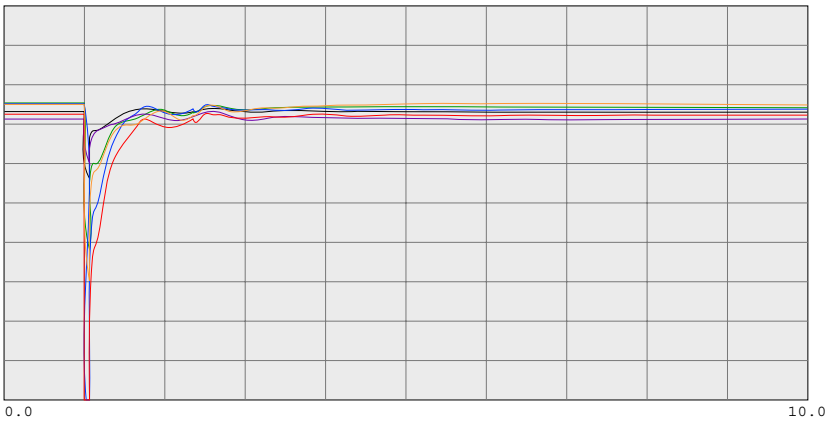

0.5000 vt	10318	SJUAN_G1	22.0	0	0.0	1	1	1.2000
0.5000 vt	12058	PEGS1	17.6	0	0.0	1	1	1.2000
0.5000 vt	10246	PERSONG1	18.0	0	0.0	1	1	1.2000
0.5000 vt	10396	LEF_S1	18.0	0	0.0	1	1	1.2000
0.5000 vt	10263	REEVE_G3	13.8	0	0.0	1	1	1.2000
0.5000 vt	10912	MILAN_GG	13.8	0	0.0	1	1	1.2000

WESTERN ELECTRICITY COORDINATING COUNCIL
12HS2A BENCHMARK CASE WITH NO Z PROJECT, ARR PST = 60 MW N-S
3-Phase fault on Four Corners-West Mesa 345 kV line at West Mesa 345
Trip Four Corners-West Mesa line in 4 cycles

Page 1

	3p-FW-pnm-wnm_60pct_milan_on-dyn.chf	c:\psas\milan\psas Fri Mar 20 08:57:38 2009

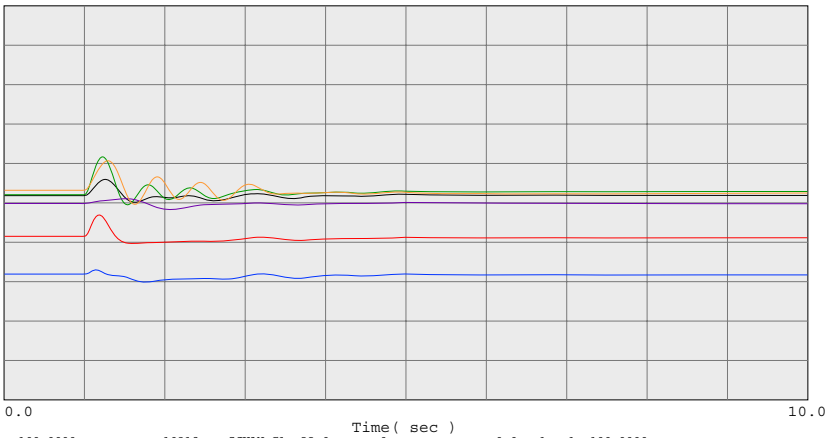

-100.0000 ang	10318	SJUAN_G1	22.0	0	0.0	1	1	100.0000
-100.0000 ang	12058	PEGS1	17.6	0	0.0	1	1	100.0000
-100.0000 ang	10246	PERSONG1	18.0	0	0.0	1	1	100.0000
-100.0000 ang	10396	LEF_S1	18.0	0	0.0	1	1	100.0000
-100.0000 ang	10263	REEVE_G3	13.8	0	0.0	1	1	100.0000
-100.0000 ang	10912	MILAN_GG	13.8	0	0.0	1	1	100.0000

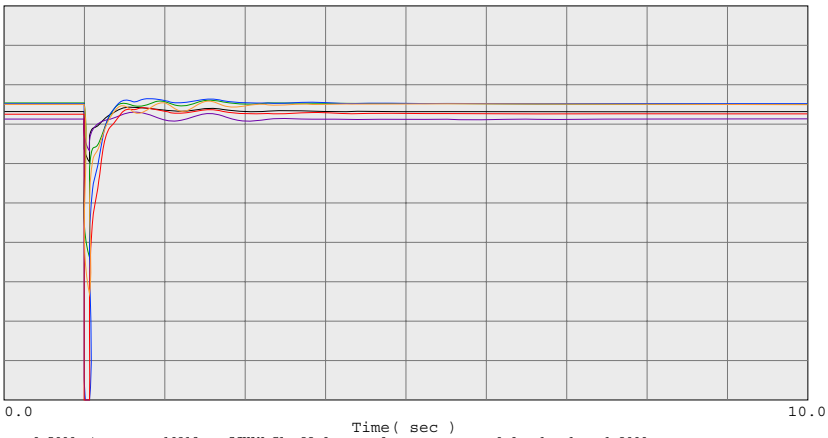

0.5000 vt	10318	SJUAN_G1	22.0	0	0.0	1	1	1.2000
0.5000 vt	12058	PEGS1	17.6	0	0.0	1	1	1.2000
0.5000 vt	10246	PERSONG1	18.0	0	0.0	1	1	1.2000
0.5000 vt	10396	LEF_S1	18.0	0	0.0	1	1	1.2000
0.5000 vt	10263	REEVE_G3	13.8	0	0.0	1	1	1.2000
0.5000 vt	10912	MILAN_GG	13.8	0	0.0	1	1	1.2000

WESTERN ELECTRICITY COORDINATING COUNCIL
12HS2A BENCHMARK CASE WITH NO Z PROJECT, ARR PST = 60 MW N-S
3-Phase fault on West Mesa-MKCOWIND 115 kV at West Mesa 115
Trip West Mesa-MKCOWIND 115 kV in 4 cycles

Page 1

	3p-KM-pnm-wnm_60pct_milan_on-dyn.chf	c:\psas\milan\psas Fri Mar 20 08:57:46 2009

XXXXX
125 MW Solar Large Generating Interconnection Feasibility Study

(OASIS # IA-PNM-2008-12)

March 2009

Prepared by:
ABB Consulting

Under contract with:
Public Service Company of New Mexico

Incomplete Draft
Request Withdrawn

Electric Services
Transmission Operations

Foreword

This report was prepared for XXXXX ("Interconnection Customer") by ABB Consulting[1], under contract Public Service Company of New Mexico ("PNM") Transmission Operations.

Any correspondence concerning this document, including technical and commercial questions should be referred to:

Jeff Mechenbier
Manager, Transmission/Distribution Planning and Contracts
Public Service Company of New Mexico
Alvarado Square MS-0604
Albuquerque, NM 87158
Phone: (505) 241-4582
Fax: (505) 241-4363

[1] This document is an account of work sponsored by Public Service Company of New Mexico (PNM) and conducted by ABB Inc. Neither ABB Inc., nor any person or persons acting on behalf of ABB, Inc.: (i) makes any warranty or representation, expressed or implied, with respect to the use of any information contained in this report, or that the use of any information, apparatus, method, or process disclosed in this report may not infringe privately owned rights, or (ii) assumes any liabilities with respect to the use of or for damages resulting from the use of any information, apparatus, method, or process disclosed in this document.

Table of Contents

Executive Summary 4

1 Study Methodology and Criteria 7

1.1 Project Modeling 7

1.2 Base Case Development 8

1.3 Study Methodology 9

1.4 Powerflow Performance Criteria 10

1.5 Generator Reactive Power Range Criterion 12

2 NR (Network Resource) Interconnection Analysis 13

2.1 Reactive Power Analysis 13

2.2 Powerflow Contingency Analysis 14

2.3 Short Circuit Analysis 19

3 ER (Energy Resource) Interconnection Analysis 20

4 Cost and Schedule for Upgrades 23

4.1 ER Interconnection 23

4.2 NR Interconnection 23

5 Conclusions 25

References

Appendix 1: Powerflow Diagrams
Appendix 2: Powerflow Results

Executive Summary

On June 30, 2008, XXXXX (Interconnection Customer) perfected a request to interconnect a 125 MW, 0.85 pf solar generating facility to Public Service Company of New Mexico's (PNM) transmission system in Cibola County, New Mexico. The requested point of interconnection ("POI") was 0.75 mile southeast of Bluewater substation on the Bluewater-West Mesa (BW) 115 kV line. Since the Milan Biomass project is senior in PNM's interconnection queue and requires a new substation at Milan about 3 miles from Bluewater substation on the BW 115 kV line, the present study assumes the POI for this Project to be at Milan, and thus a 2.25 mile 115 kV line is assumed for interconnection of the Project. The projected in-service date is 4th quarter 2012.

A feasibility study was conducted by ABB Consulting under contract to PNM to determine, on a preliminary basis, the project impacts and system reinforcements (if required) for safe and reliable interconnection of the Project to the PNM system. All modeling assumptions (base case, generation dispatch and Project data), as well as performance criteria, were provided to ABB by PNM.

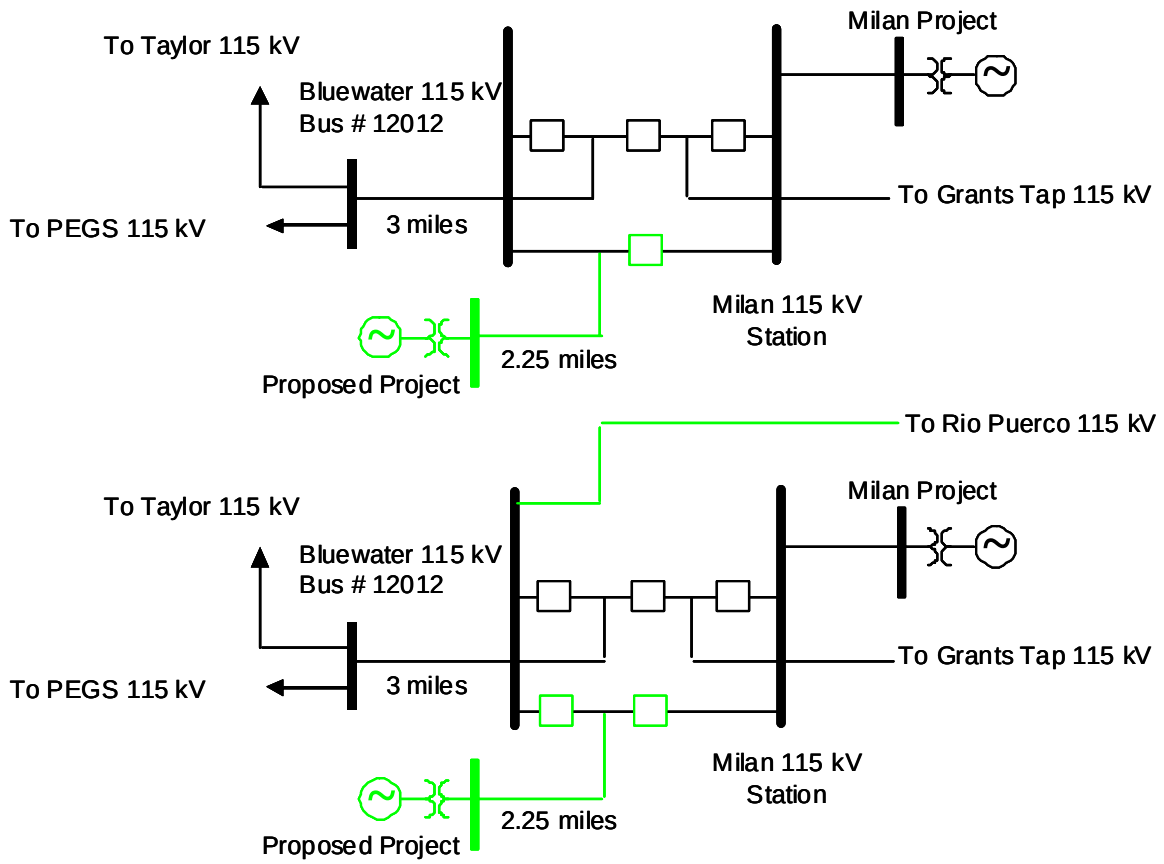

Figure 1. Project Interconnection Options. Top: ER Interconnection. Bottom: NR Interconnection with New 115 kV Line from Milan to Rio Puerco

The location of the Project is as shown in Figure 1. The POI is assumed to be the 115 kV switching station associated with the Milan Biomass Project (Milan Station), which is senior in PNM's interconnection queue. The new station is to be built in a ring bus configuration, expandable to breaker and a half. A new breaker will be added at the Milan Station to interconnect the Project. The facilities associated with the Project are shown in green.

The feasibility analysis of the XXX Solar 125 MW Project was conducted using the GE-PSLF program. The analysis included a power factor analysis and a contingency powerflow analysis. PNM conducted a short circuit analysis, a summary of which is also included in this report.

The Interconnection Customer requested a Network Resource ("NR") analysis as well as an Energy Resource ("ER") analysis for the Project. The purpose of the NR analysis is to identify the Network Upgrades required for the Project to meet the requirements for Network Resource interconnection Service. The purpose of the ER analysis is to (i) identify the Network Upgrades necessary to allow interconnection of the full output of the Project, and (ii) identify the maximum allowed Project output that can be injected prior to the completion of any Network Upgrades, except Interconnection Facilities and upgrades required to mitigate short-circuit impacts.

ER Interconnection Analysis

The ER analysis showed that, with respect to N-1 conditions, no network upgrades beyond interconnection facilities are required to interconnect the Project as an ER. This assumes that the dispatch scenario and runbacks of Project generation for certain contingencies are as described in Section 3 of this report. The interconnection facilities required for ER interconnection would be as shown in the upper diagram of Figure 1, with estimated costs as shown in Table 1.

Table 1 – Cost and Construction Time Estimates
Interconnection Facilities - ER Interconnection

Item	Cost Estimate	Construction Time Estimate
New breaker at Milan station (1)	$1,000,000	12 months
TOTAL COST	$1,000,000	

NR Interconnection Analysis

The conclusion from the power factor analysis is that the Project meets PNM's power factor requirements at the POI, provided that the Project generator's reactive capabilities are as stated in the application, i.e. 0.85 pf lagging (overexcited) to 0.85 pf leading (underexcited).

The conclusion from the contingency powerflow analysis is that numerous overloads caused by the Project or worsened by the Project occur if the only facilities constructed for the Project are the basic interconnection facilities as shown in the upper diagram of Figure 1. These numerous overloads are largely eliminated by addition of a new 115 kV transmission line from Milan to Rio Puerco, a distance of approximately 100 miles. However, small overloads of the Ambrosia – Taylor – Bluewater 115 kV line sections, the McKinley County Wind - Marquez - Unser 115 kV

line sections, and the Milan – Grants 115 kV line section remain even when the Milan – Rio Puerco 115 kV line is added. Of these remaining overloads, it should be noted that they are, in part, addressed by the upgrades required for the Milan Biomass PV project. In particular, the McKinley County – West Mesa 115 kV line (KM line) is to be reconductored for both the main interconnection plan and the optional interconnection plan for the Milan Biomass PV project. The Milan – Grants Tap portion (8.7 miles) of the Bluewater – West Mesa 115 kV line (BW line) is also to be reconductored for the Milan Biomass PV project, for the main interconnection plan. The remaining overloads of the Ambrosia – Taylor – Bluewater 115 kV lines will, however, need to be addressed by upgrades as part of the XXXXX Solar 125 MW Project.

For NR interconnection service at Milan (bottom diagram in Figure 1), the mitigation plan would thus be to add a new 115 kV transmission line from Milan to Rio Puerco and upgrade the Ambrosia-Taylor and Taylor-Bluewater 115 kV lines. The costs for this interconnection plan are as shown in Table 2.

Table 2 – Cost and Construction Time Estimates
Interconnection Facilities - NR Interconnection

Item	Cost Estimate	Construction Time Estimate
New breakers at Milan station (2)	$2,000,000	12 months
Ambrosia -Bluewater 115 kV Line Upgrade*	$5,650,000	36 months
New 115 kV, 200 MVA line from Milan to Rio Puerco (estimate 100 miles)	$70,000,000	4-10 years
New breakers at Rio Puerco station (1)	$1,000,000	12 months
TOTAL COST	$??	

Assumes reconductor of this line to at least a ?? MVA (necessary MVA rating should be based on the NR results in this study).

Note that neither NR nor ER interconnection service conveys transmission service. Additional network upgrades within and outside the PNM transmission system may be required for delivery service. The extent of the additional network upgrades that would be required depends on the timing of the transmission service request, the type of delivery service requested, and the specific Point of Delivery, if applicable.

The short circuit analysis showed _____.

All the results discussed in this report are subject to further review in the System Impact Study.

1 Study Methodology and Criteria

1.1 Project Modeling

The Project was represented in powerflow models as shown in Figure 1 below.

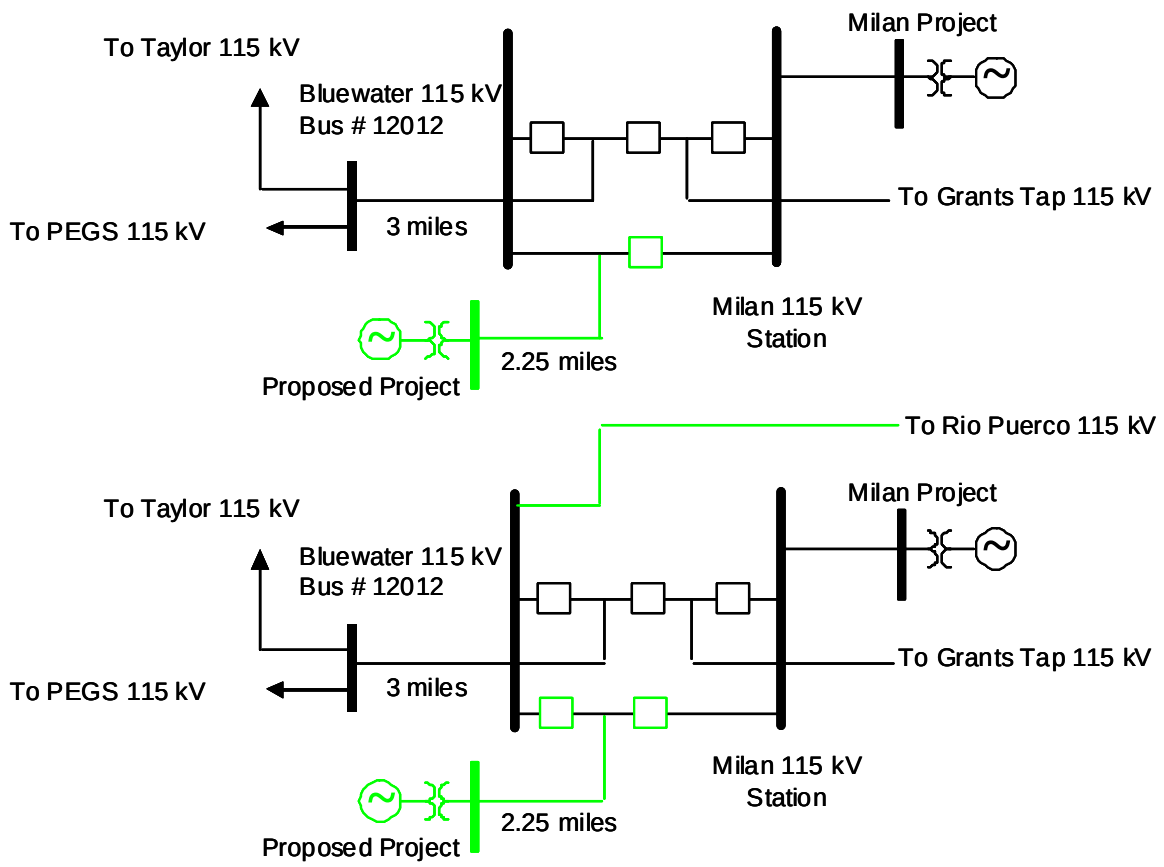

Figure 1. Project Interconnection Options. Top: ER Interconnection. Bottom: NR Interconnection with New 115 kV Line from Milan to Rio Puerco

In Figure 1 above, existing 115 kV transmission facilities and facilities associated with the Milan Biomass project, which is senior in PNM's interconnection queue and requires a new substation at Milan, are shown in black. The Project facilities are shown in green. Milan Station (proposed Project Point of Interconnection) is about 3 miles from Bluewater towards Grants.

The project parameters provided by the Interconnection Customer are listed below.

Generator Data

Generator

Nameplate rating:	*137 MVA*
Net Plant Output:	*125 MW*
Reactive:	*Rated power factor: 0.85 (lag) 0.85 (lead)*
Terminal voltage:	*13.8 kV*
Voltage Control:	*Generator controls voltage at high side of transformer*

Station step up transformer

Rating:	*100/133/167MVA*
Voltage Ratio	*13.8 / 115 kV*
Impedance	*X = 0.09 p.u. on 100 MVA base, X/R = 51*

Interconnection line

Assume 2.25 mile 115 kV line (R = 0.00214, X = 0.01159, B= 0.00200 pu on 100 MVA)

Generation Displacement Methodology

For the purposes of the NR analysis, the Project output is assumed to displace generation at San Juan.

For the purposes of the ER analysis, it is assumed that generation in the Project area can be reduced. In general, the generators that are assumed to be at reduced output are selected such that the Project's ability to inject power into the system is maximized. For the ER analysis in this study, a first set of runs were made with the Project output displaced at PEGS1. Additional ER analysis runs were made that reduced the remaining PEGS1 generation further (to zero), with generation increased at PERSONG1 and LEFG1 to compensate the reduction at PEGS1. Because PEGS is a base-load coal unit, the output levels used in the ER analysis are expected only a small percentage of the time.

1.2 Base Case Development

A WECC 2012 heavy summer case (12HS2A) was used to develop the base cases. Generation dispatch, transmission scenarios and the Project were added as discussed below.

Generation Dispatch

Proposed generation projects in the local holding a senior position in PNM's Generator Interconnection Queue, and their respective transmission system reinforcements, are included in the base cases. Certain existing or proposed projects outside the study area, which do not have an impact on the Project, were excluded or were not dispatched. Table 1 shows the generation dispatch for existing and proposed generation projects.

Table 1 – Base-line generation pattern

Unit	Nameplate MW Rating	MW Output Level
Existing Reeves 1	44	0
Existing Reeves 2	43	0
Existing Reeves 3	67	66
Existing Delta-Person	139	80
Existing Valencia Energy Facility	143	0
Existing Taiban Mesa Wind Project **	200	0
Existing Aragonne Mesa Wind project *	200	0
Proposed McKinley Wind Project	100	100
Proposed Torrance Biomass Project	37.5	37.5
Proposed Torrance Wind Project **	100	0
Proposed Eastern and Northern N.M. Projects**		0
Proposed Albuquerque area Projects **		0

* 90 MW has been developed to date.
** These projects are outside the study area and do not have an effect on the Study.

In the base cases, Southern New Mexico Import (SNMI) level is approximately 355 MW in the import direction. The Arroyo Phase Shifting Transformer (PST) is scheduled at 60 MW southbound. The Blackwater HVDC converter is scheduled at 50 MW Westbound.

1.3 Study Methodology

Base Cases

The following post-project cases from the Milan Biomass PV feasibility study were used as the pre-Project cases for this study:

Zone 122 at 100% load:
pnm-wnm_milan_on.sav

Zone 122 scaled to 60% load:
pnm-wnm_60pct_milan_on.sav

The above cases represent 2012 Heavy Summer conditions, without the Milan Biomass – PV Project. The above cases were renamed to **"XXX125_off.sav"** and **"60pct_XXX125_off.sav"** and then modified these cases to produce the following additional study cases as described in Table 2 below.

Table 2 – Study Scenarios Evaluated

Type	Case	Description
Pre-Project	XXX125_off	Peak summer load; XXX 125 Solar Off
	60pct_XXX125_off	60% load level in Zone 122; XXX 125 Solar On
ER	ER_XXX125_on	Peak summer load; XXX 125 Solar On
	60pct_ER_XXX125_on	60% load level in Zone 122; XXX 125 Solar On
NR	NR1_XXX125_on	Peak summer load; XXX 125 Solar On
	60pct_NR1_XXX125_on	60% load level in Zone 122; XXX 125 Solar On
NR	NR2_XXX125_on	Peak summer load; XXX 125 Solar On; New 115 kV line from Milan to Rio Puerco
	60pct_NR2_XXX125_on	60% load level in Zone 122; XXX 125 Solar On; New 115 kV line from Milan to Rio Puerco

For the ER post-Project cases, the Project generation was displaced at San Juan. For the NR post-Project cases, the Project generation was displaced at PEGS1.

For the cases with 60% load in Zone 122, the reduced load was displaced by reducing load-side generation in the Albuquerque area, specifically at Delta-Person.

Powerflow diagrams for the above base cases are given in Appendix 1.

1.4 Powerflow Performance Criteria

The powerflow performance criteria are given in Table 3 below.

Table 3 – Powerflow Performance Criteria

Area	Conditions	Loading Limits	Voltage (p.u.)	Voltage Drop	Application
EPEC (Area 11)	Normal	< Normal Rating	0.95 - 1.05		69kV and above
			0.95 - 1.10		Artesia 345 kV
			0.95 - 1.08		Arroyo 345 kV PST source side
			0.90 - 1.05		Alamo, Sierra Blanca and Van Horn 69kV
	Contingency	< Emergency Rating	0.925 - 1.05	7%	60 kV to 115 kV
			0.95 - 1.07	7%	Artesia 345kV
			0.95 - 1.08	7%	Arroyo 345kV PST source side
			0.90 - 1.05		Alamo, Sierra Blanca and Van Horn 69kV
			0.95 - 1.05	7%	Hidalgo, Luna, or other 345 kV buses
PNM (Area 10)	Normal ALIS	< Normal Rating	0.95-1.05		46 kV and above*
	Contingency N-1	< Emergency Rating	0.925-1.05	6 %**	46 kV to 115 kV
			0.90 – 1.05	6 %**	230 kV and above
	Contingency N-2	< Emergency Rating	0.90-1.05	10 %	46 kV and above*
Tri-State (zones 120-123)	Normal ALIS	< Normal Rating	0.95-1.05		All buses
	Contingency N-1	< Emergency Rating	0.925-1.05	6 %**	Tri-State buses served from the PNM System (46 kV to 115 kV)
			0.90 – 1.05	6 %**	Tri-State buses served from the PNM System (230 kV and above)
			0.90-1.1	7 %	Tri-State buses served from the Tri-State system
	Contingency N-2	< Emergency Rating	0.90-1.1	10%	All buses

*Taiban Mesa and Guadalupe 345 kV voltage 0.95 and 1.1 p.u. under normal and contingency conditions.
** For PNM buses in southern New Mexico and Tri-State buses in southern New Mexico served from the PNM system, the allowable N-1 voltage drop is 7%.

The above performance criteria were used to evaluate the impact of the Project.

1.5 Generator Reactive Power Range Criterion

All generators that seek to interconnect to the PNM transmission system must comply with certain reactive power requirements[2]. For conventional generators, the power factor requirement is a net +/- 0.95 pf range at the POI.

[2] See PNM FAC-001-R2.1.3 - VOLTAGE LEVEL AND MW/MVAR CAPACITY OR DEMAND.

2 NR (Network Resource) Interconnection Analysis

2.1 Reactive Power Analysis

Powerflow analysis was performed to ensure that the proposed generator meets PNM's power factor requirements at the Point of Interconnection (POI), where the POI is defined as the point where the Project facilities interconnect to the PNM transmission system.

Synchronous generators larger than 20 MW connecting to the PNM transmission system are required to have a power factor range of 0.95 overexcited to 0.95 underexcited as measured at the Point of Interconnection [1]. The analysis thus focused on determining whether this requirement is met for the Project.

Per information from PNM, the power factor analysis has been carried out with the voltage at the POI fixed at 1.00 pu. For this condition, the following results were calculated from powerflow analysis:

Table 4 – Power Factor Analysis Results

Case	XXX Solar	At POI
1	125 MW 77.4 MVAR (0.85 pf lagging)	124.3 MW 58.5 MVAR (0.90 pf lagging)
2	125 MW -77.4 MVAR (0.85 pf leading)	124.0 MW -103.8 MVAR (0.77 pf leading)

Table 4 shows that the Project meets the power factor requirement.

2.2 Powerflow Contingency Analysis

(Add one-line)

Powerflow analysis was conducted using GE-PSLF with the PSAS automation scripts. The contingencies evaluated are listed in Table 5 below.

Table 5 – List of Contingencies

N-1 Contingencies
Four Corners–West Mesa 345 kV
San Juan–Rio Puerco 345 kV
Bluewater–Ambrosia 115 kV
Bluewater–PEGS 115 kV
Bluewater–Milan 115 kV
Milan– West Mesa 115 kV
PEGS–Yahtahey 115 kV
PEGS–Ambrosia 230 kV
West Mesa–Ambrosia 230 kV
West Mesa-MKCOWIND 115 kV

N-2 Contingencies
West Mesa–Ambrosia 230 kV and Ambrosia–Bisti 230 kV
West Mesa–Ambrosia 230 kV and Ambrosia–PEGS 230 kV

For the base cases described in Table 2 and the contingencies given in Table 5, powerflow contingency analysis was performed using the PSAS simulation tool. The results of the pre- and post-Project conditions were compared to identify thermal and voltage criteria violations caused by the Project, per the criteria shown in Table 3.

The results are included in Appendix 2 and are discussed below.

Pre-Contingency Low and High Voltage Violations:

No violations due to the Project are noted.

Pre-Contingency Overloads:

No violations due to the Project are noted. The following 115 kV circuits reach 90% of their continuous ratings for Network Resource condition 1 (NR1 – no new 115 kV line from Milan to Rio Puerco):

Milan Tap – Grants Tap 115 kV
Paradise – Irving 115 kV
West Mesa – Paradise 115 kV

These circuits are reduced to below 90% of their continuous ratings for Network Resource condition 2 (NR2 – with new 115 kV line from Milan to Rio Puerco).

Post-Contingency Low and High Voltage Violations:

Small increases in post-contingency voltage are noted for some buses for post-Project conditions. For most of these buses, the increases are very small (less than 1%). A few instances of post-contingency voltage violations increasing by amounts in the 2% range for post-Project conditions are noted for buses in the McKinley County Wind farm. Note however that these violations occur mainly for "NR1" conditions (no new line from Milan to Rio Puerco) and are improved for conditions with the new 115 kV line from Milan to Rio Puerco.

Note also that no attempt was made to optimize the Project's voltage control strategy for this feasibility study. This can be investigated further in the System Impact Study.

For details, please see Appendix 1.

Post-Contingency Voltage drop or rise Violations:

No significant impacts due to the Project are noted.

Post-Contingency Overloads:

The Milan – West Mesa portion of the Bluewater – West Mesa (BW) 115 kV line overloads for the Bluewater-Milan 115 kV N-1 contingency in the main interconnection plan (Network Resource Case N1; no new 115 kV line from Milan to Rio Puerco). The magnitudes of the overloads in the various sections of the BW line are shown in Table 6.

Table 6. Overloads for Bluewater-Milan 115 kV N-1 Contingency (Network Resource Case N1; no new 115 kV line from Milan to Rio Puerco)

Line Section	Rating Amps	Peak Load		60% Load		Line Miles
		Pre-Proj	Post-Proj	Pre-Proj	Post-Proj	
LAGUNA 115.00-GRANTS_T 115.00 ck=1	497	N/A	1.462	N/A	1.515	
LAGUNA 115.00-LAGUNAT 115.00 ck=1	497	N/A	1.404	N/A	1.477	
LAGUNAT 115.00-LSTHRZNT 115.00 ck=1	497	N/A	1.398	N/A	1.471	
LSTHRZNT 115.00-WESTMS_3 115.00 ck=1	497	N/A	1.349	N/A	1.422	
MILAN_TP 115.00-GRANTS_T 115.00 ck=1	497	N/A	1.593	N/A	1.594	8.7

Similarly, the Bluewater – Milan Tap portion of the Bluewater – West Mesa (BW) 115 kV line overloads for the Milan Tap – West Mesa 115 kV contingency in the main interconnection plan. The magnitude of the overload is shown in the table below.

Table 7. Overloads for Milan-West Mesa 115 kV Contingency (Network Resource Case N1; no new 115 kV line from Milan to Rio Puerco)

Line Section	Rating Amps	Peak Load		60% Load		Line Miles
		Pre-Proj	Post-Proj	Pre-Proj	Post-Proj	
BLUEWATR 115.00-MILAN_TP 115.00 ck=1	497	N/A	1.619	N/A	1.624	3

Other overloads found for the Four Corners – West Mesa 345 kV line contingency, the PEGS-Ambrosia 230 kV line contingency, the San Juan – Rio Puerco 345 kV line contingency, the West Mesa – Ambrosia 230 kV line contingency, and the West Mesa – McKinley County (KM) contingency in the main interconnection plan (no new 115 kV line from Milan to Rio Puerco) are found in Tables 8, 9, 10, 11, and 12 respectively.

Table 8. Overloads for Four Corners – West Mesa 345 kV N-1 Contingency (Network Resource Case N1; no new 115 kV line from Milan to Rio Puerco)

Line Section	Rating Amps	Peak Load		60% Load		Line Miles
		Pre-Proj	Post-Proj	Pre-Proj	Post-Proj	
MILAN_TP 115.00-GRANTS_T 115.00 ck=1	497	N/A	1.088	N/A	1.064	8.7

Table 9. Overloads for PEGS-Ambrosia 230 kV N-1 Contingency (Network Resource Case N1; no new 115 kV line from Milan to Rio Puerco)

Line Section	Rating Amps	Peak Load		60% Load		Line Miles
		Pre-Proj	Post-Proj	Pre-Proj	Post-Proj	
AMBROSIA 115.00-TAYLOR_P 115.00 ck=1	673	N/A	1.273	N/A	1.339	
MILAN_TP 115.00-GRANTS_T 115.00 ck=1	497	N/A	1.081	N/A	1.062	8.7
TAYLOR_P 115.00-BLUEWATR 115.00 ck=1	673	N/A	1.282	N/A	1.348	

Table 10. Overloads for San Juan – Rio Puerco 345 kV N-1 Contingency (Network Resource Case N1; no new 115 kV line from Milan to Rio Puerco)

Line Section	Rating Amps	Peak Load		60% Load		Line Miles
		Pre-Proj	Post-Proj	Pre-Proj	Post-Proj	
LAGUNA 115.00-GRANTS_T 115.00 ck=1	497	N/A	1.015	N/A	1.044	
MILAN_TP 115.00-GRANTS_T 115.00 ck=1	497	N/A	1.145	N/A	1.039	8.7

Table 11. Overloads for West Mesa – Ambrosia 230 kV N-1 Contingency (Network Resource Case N1; no new 115 kV line from Milan to Rio Puerco)

Line Section	Rating Amps	Peak Load		60% Load		Line Miles
		Pre-Proj	Post-Proj	Pre-Proj	Post-Proj	
LAGUNA 115.00-GRANTS_T 115.00 ck=1	497	N/A	1.152	0.931	1.185	
LAGUNA 115.00-LAGUNAT 115.00 ck=1	497	N/A	1.094	N/A	1.148	
LAGUNAT 115.00-LSTHRZNT 115.00 ck=1	497	N/A	1.089	N/A	1.142	
LSTHRZNT 115.00-WESTMS_3 115.00 ck=1	497	N/A	1.037	N/A	1.091	
MARQUEZT 115.00-UNSER 115.00 ck=1	668	1.003	1.11	1.028	1.135	
MILAN_TP 115.00-GRANTS_T 115.00 ck=1	497	1.022	1.278	1.004	1.260	8.7
MKCOWIND 115.00-MARQUEZT 115.00 ck=1	668	1.011	1.118	1.036	1.143	

Table 12. Overloads for West Mesa – McKinley County N-1 Contingency (Network Resource Case N1; no new 115 kV line from Milan to Rio Puerco)

Line Section	Rating Amps	Peak Load		60% Load		Line Miles
		Pre-Proj	Post-Proj	Pre-Proj	Post-Proj	
MILAN_TP 115.00-GRANTS_T 115.00 ck=1	497	N/A	1.035	N/A	1.014	8.7

Network upgrades are required to address the overload shown in Tables 8-12 if Network Resource Interconnection Service will be pursued for the Project. Given the numbers of overloads and the magnitudes of the overloads in Tables 8-12, a new 115 kV line will be required from Milan to Rio Puerco for Network Resource Service. The powerflow contingency studies were therefore rerun with this new line, using the following assumed parameters:

New 115 kV Line from Milan to Rio Puerco:

Assume 100 mile 115 kV line (R = 0.094950, X = 0.51495, B= 0.08893 pu on 100 MVA)

The above data for the new 115 kV line are scaled from the data for the Belen – Willard 115 kV line, which has a 200 MVA rating and is 51.5 miles in length. The new line is integrated into the Milan 115 kV station as shown in the bottom diagram in Figure 1.

With this new line (Network Resource Case N2), the overloads identified in Tables 8-12 are largely resolved, with a few remaining overloads as given in Tables 13-14.

Table 13. Overloads for PEGS-Ambrosia 230 kV N-1 Contingency (Network Resource Case N2; new 115 kV line from Milan to Rio Puerco)

Line Section	Rating Amps	Peak Load		60% Load		Line Miles
		Pre-Proj	Post-Proj	Pre-Proj	Post-Proj	
AMBROSIA 115.00-TAYLOR_P 115.00 ck=1	673	N/A	0.992	N/A	1.048	
TAYLOR_P 115.00-BLUEWATR 115.00 ck=1	673	N/A	1.001	N/A	1.057	

Table 14. Overloads for West Mesa – Ambrosia 230 kV N-1 Contingency (Network Resource Case N2; new 115 kV line from Milan to Rio Puerco)

Line Section	Rating Amps	Peak Load		60% Load		Line Miles
		Pre-Proj	Post-Proj	Pre-Proj	Post-Proj	
MARQUEZT 115.00-UNSER 115.00 ck=1	668	1.003	1.028	1.028	1.050	
MILAN_TP 115.00-GRANTS_T 115.00 ck=1	497	1.022	1.102	1.004	1.079	8.7
MKCOWIND 115.00-MARQUEZT 115.00 ck=1	668	1.011	1.036	1.036	1.057	

Of the remaining overloads, it should be noted that these are, in part, addressed by the upgrades required for the Milan Biomass PV project. In particular, the McKinley County – West Mesa 115 kV line (KM line) is to be reconductored for both the main interconnection plan and the optional interconnection plan for the Milan Biomass PV project. The Milan – Grants Tap portion (8.7 miles) of the Bluewater – West Mesa 115 kV line (BW line) is also to be reconductored for the Milan Biomass PV project, for the main interconnection plan. These upgrades associated with the Milan Biomass PV project will resolve the remaining overloads shown in Table 14.

The remaining overloads of the Ambrosia – Taylor – Bluewater 115 kV lines will need to be addressed by upgrades as part of the XXX Solar 125 MW Project.

2.3 Short Circuit Analysis

(To be performed by PNM)

Table 15 – Number of circuit breakers above 90% of interrupting (IN) and momentary (MO) current rating

	Person 115 kV IC/MO	West Mesa 1 115 kV IC/MO	West Mesa 2 115 kV IC/MO

3 ER (Energy Resource) Interconnection Analysis

The Interconnection Facilities required for ER interconnection would be as shown in the top diagram of Figure 1 (i.e., no new 115 kV line from Milan to Rio Puerco). The facilities are limited to physically connecting the Project at Milan.

For the purposes of the ER analysis, it is assumed that generation in the Project area can be reduced. In general, the generators that are assumed to be at reduced output are selected such that the Project's ability to inject power into the system is maximized as needed. For the ER analysis in this study, a first set of runs is made with the Project output displaced at PEGS1. To address remaining overloads found in this initial run, additional ER analysis runs are made that reduce the remaining PEGS1 generation further (to zero), with generation increased at PERSONG1 and LEFG1 to compensate the reduction at PEGS1.

The results from the initial ER powerflow analysis, with the Project generation displaced at PEGS1, are shown in Tables 16-19.

Table 16. Powerflow Results for Bluewater-Milan 115 kV N-1 Contingency (Initial Energy Resource Analysis with Project Displaced at PEGS1)

Line Section	Rating Amps	Peak Load		60% Load	
		Pre-Proj	Post-Proj	Pre-Proj	Post-Proj
LAGUNA 115.00-GRANTS_T 115.00 ck=1	497	N/A	1.462	N/A	1.514
LAGUNA 115.00-LAGUNAT 115.00 ck=1	497	N/A	1.403	N/A	1.477
LAGUNAT 115.00-LSTHRZNT 115.00 ck=1	497	N/A	1.398	N/A	1.471
LSTHRZNT 115.00-WESTMS_3 115.00 ck=1	497	N/A	1.349	N/A	1.422
MILAN_TP 115.00-GRANTS_T 115.00 ck=1	497	N/A	1.593	N/A	1.594

Table 17. Powerflow Results for Milan-West Mesa 115 kV N-1 Contingency (Initial Energy Resource Analysis with Project Displaced at PEGS1)

Line Section	Rating Amps	Peak Load		60% Load	
		Pre-Proj	Post-Proj	Pre-Proj	Post-Proj
BLUEWATR 115.00-MILAN_TP 115.00 ck=1	497	N/A	1.621	N/A	1.624

Table 18. Powerflow Results for San Juan – Rio Puerco 345 kV N-1 Contingency (Initial Energy Resource Analysis with Project Displaced at PEGS1)

Line Section	Rating Amps	Peak Load		60% Load	
		Pre-Proj	Post-Proj	Pre-Proj	Post-Proj
MILAN_TP 115.00-GRANTS_T 115.00 ck=1	497	N/A	1.063	N/A	1.039

Table 19. Powerflow Results for West Mesa - Ambrosia 230 kV N-1 Contingency (Initial Energy Resource Analysis with Project Displaced at PEGS1)

Line Section	Rating Amps	Peak Load		60% Load	
		Pre-Proj	Post-Proj	Pre-Proj	Post-Proj
LAGUNA 115.00-GRANTS_T 115.00 ck=1	497	N/A	1.016	N/A	1.048
LAGUNA 115.00-LAGUNAT 115.00 ck=1	497	N/A	0.959	N/A	1.011
MARQUEZT 115.00-UNSER 115.00 ck=1	668	N/A	1.003	N/A	1.027
MILAN_TP 115.00-GRANTS_T 115.00 ck=1	497	N/A	1.140	N/A	1.122
MKCOWIND 115.00-MARQUEZT 115.00 ck=1	668	N/A	1.011	N/A	1.035

Based on the results of Tables 16-19, additional ER analysis runs were made that reduced the PEGS1 generation further (to zero), with generation increased at PERSONG1 and LEFG1 to compensate the reduction at PEGS1. These runs resolved all overloads shown in Tables 18 and 19.

To resolve the remaining overloads shown in Tables 16 and 17, runs were made with the Milan project generation set to zero in addition to the reduction at PEGS1 described above, followed by reduction of the XXX Solar Project generation in 5 MW steps until the overloads were eliminated, with results shown in Tables 20 and 21.

Table 20. Project Generation Runback Levels for Bluewater-Milan 115 kV N-1 Contingency (Final Energy Resource Analysis with PEGS1 and Milan at 0 MW)

Line Section	Rating Amps	% Zone 122 Load	
		100%	60%
LAGUNA 115.00-GRANTS_T 115.00 ck=1	497	110 MW	100 MW
LAGUNA 115.00-LAGUNAT 115.00 ck=1	497	110 MW	110 MW
LAGUNAT 115.00-LSTHRZNT 115.00 ck=1	497	110 MW	110 MW
LSTHRZNT 115.00-WESTMS_3 115.00 ck=1	497	110 MW	110 MW
MILAN_TP 115.00-GRANTS_T 115.00 ck=1	497	100 MW	100 MW

Table 21. Project Generation Runback Levels for Milan-Grants 115 kV N-1 Contingency (Final Energy Resource Analysis with PEGS1 and Milan at 0 MW)

Line Section	Rating Amps	% Zone 122 Load	
		100%	60%
BLUEWATR 115.00-MILAN_TP 115.00 ck=1	497	100 MW	95 MW

The conclusion from Tables 16-19 is that most Project-related post-contingency overloads can be resolved by reducing PEGS1 generation by the amount of generation at the Project leaving the Milan project generation as-is. The exception to this is the overloads caused by outages of the 115 kV outlet lines at Milan. For outage of the Bluewater-Milan 115 kV line or the Milan-

West Mesa 115 kV line, the Milan Biomass project generation must be reduced to zero, with the XXX Solar Project generation must be reduced to 110 MW or 100 MW as shown in Tables 20 and 21.

Note that upgrade of the Milan – Grants Tap line will be included as part of the main interconnection option for the Milan Biomass-PV Project. Required runback for the XXX Solar Project for ER interconnection service will be influenced by the choice of conductor used for the upgrade of this line section. The results in Table 20 are thus conservative (pessimistic), since the anticipated upgrade of the Milan – Grants Tap line section is not included in the rating shown for this line section.

Note also that the overloads of the Grants – West Mesa 115 kV lines will occur for outage of the Bluewater-Milan 115 kV line, and these overloads must be reduced by runback of the XXX Solar Project generation since these line sections will not be upgraded by the Milan Biomass-PV Project. With runback of the Milan Biomass-PV Project to zero, these overloads are alleviated by reduction of the XXX Solar Project as shown in Tables 20 and 21. If the Milan Biomass-PV project is kept at its full output, the XXX Solar Project must be run back to 70 MW to prevent the overload of these line sections.

In general, scenarios allowing full output of the project are expected to occur infrequently and the Project would be restricted to little or no output a large percentage of the time under ER Interconnection Service.

4 Cost and Schedule for Upgrades

4.1 ER Interconnection

The analysis shows that, with respect to N-1 conditions, no network upgrades beyond interconnection facilities are required to interconnect the Project as an ER, however, full to partial curtailment of the project would be expected most of the time to prevent contingency overloads. The interconnection facilities required for ER interconnection would be as shown in the upper diagram of Figure 1 with estimated costs as shown in Table 22.

Table 22 – Cost and Construction Time Estimates (ER Interconnection)

Item	Cost Estimate	Construction Time Estimate
New breaker at Milan station (1)	$1,000,000	12 months
TOTAL COST	$1,000,000	

4.2 NR Interconnection

For NR interconnection service at Milan (bottom diagram in Figure 1), the mitigation plan would be to add a new 115 kV transmission line from Milan to Rio Puerco and upgrade the Ambrosia-Taylor and Taylor-Bluewater 115 kV lines. The costs for this interconnection plan are shown in Table 23.

Table 23 – Cost and Construction Time Estimates (NR Interconnection)

Item	Cost Estimate	Construction Time Estimate
New breakers at Milan station (2)	$2,000,000	12 months
Ambrosia -Bluewater 115 kV Line Upgrade*	$5,650,000	36 months
New 115 kV, 200 MVA line from Milan to Rio Puerco (estimate 100 miles)	$70,000,000	4-10 years
New breakers at Rio Puerco station (1)	$1,000,000	12 months
TOTAL COST	$??	

The above estimates do not include the cost of the Project's 115 kV interconnecting line to Milan Station (estimate 2.25 miles).

5 Conclusions

A feasibility study has been conducted to determine, on a preliminary basis, the project impacts and system reinforcements (if required) for safe and reliable interconnection of the XXX Solar 125 MW Project to the PNM system. All modeling assumptions (base case, generation dispatch and Project data), as well as performance criteria, were provided to ABB by PNM. The feasibility analysis of the XXX Solar 125 MW Project was conducted using the GE-PSLF program. The analysis included a power factor analysis and a contingency powerflow analysis. PNM conducted a short circuit analysis, a summary of which is also included in this report.

The conclusion from the power factor analysis is that the Project meets PNM's power factor requirements at the POI, provided that the Project generator's reactive capabilities are as stated in the application, i.e. 0.85 pf lagging (overexcited) to 0.85 pf leading (underexcited).

The Interconnection Customer requested a Network Resource ("NR") analysis as well as an Energy Resource ("ER") analysis for the Project. The purpose of the NR analysis is to identify the Network Upgrades required for the Project to meet the requirements for Network Resource Interconnection Service. The purpose of the ER analysis is to (i) identify the Network Upgrades necessary to allow interconnection of the full output of the Project, and (ii) identify the maximum allowed Project output that can be injected prior to the completion of any Network Upgrades, except Interconnection Facilities and upgrades required to mitigate short-circuit impacts.

The ER powerflow analysis showed that, with respect to N-1 conditions, no network upgrades beyond interconnection facilities are required to interconnect the Project as an ER. This assumes that the Project will be curtailed any-time contingencies would result in criteria violations. Such curtailments would be expected to be in place most of the time.

The NR powerflow analysis showed that numerous overloads caused by the Project or worsened by the Project occur if the only facilities constructed for the Project are the basic interconnection facilities (as required for ER interconnection service). These numerous overloads are largely eliminated by addition of a new 115 kV transmission line from Milan to Rio Puerco, a distance of approximately 100 miles. However, small overloads of the Ambrosia – Taylor – Bluewater 115 kV line sections, the McKinley County Wind - Marquez - Unser 115 kV line sections, and the Milan – Grants 115 kV line section remain even when the Milan – Rio Puerco 115 kV line is added. Of these remaining overloads, it should be noted that they are, in part, addressed by the upgrades required for the Milan Biomass PV project. In particular, the McKinley County – West Mesa 115 kV line (KM line) is to be reconductored for both the main interconnection plan and the optional interconnection plan for the Milan Biomass PV project. The Milan – Grants Tap portion (8.7 miles) of the Bluewater – West Mesa 115 kV line (BW line) is also to be reconductored for the Milan Biomass PV project, for the main interconnection plan. The remaining overloads of the Ambrosia – Taylor – Bluewater 115 kV lines will, however, need to be addressed by upgrades as part of the XXX Solar 125 MW Project.

For NR interconnection service at Milan, the mitigation plan would thus be to add a new 115 kV transmission line from Milan to Rio Puerco and upgrade the Ambrosia-Taylor - Taylor-Bluewater 115 kV lines.

Note that neither NR nor ER interconnection service conveys transmission service. Additional network upgrades within and outside the PNM transmission system may be required for delivery service. The extent of the additional network upgrades that would be required depends on the timing of the transmission service request, the type of delivery service requested, and the specific Point of Delivery, if applicable.

The short circuit analysis showed _____.

All the results discussed in this report are subject to further review in the System Impact Study.

References

[1] Facility Connection Requirements FAC-001- R2.1.3 Voltage Level and MW/MVAR Capacity or Demand.

[2] Request for Interconnection of Generation with the Public Service Company of New Mexico Transmission System, dated June 30, 2008.

[3] PNM Study Criteria and Guidelines, dated March 4, 2008. File PNM_Study_Criteria_and_Guidelines_03-04-08.pdf.

Appendix 1
Powerflow Diagrams

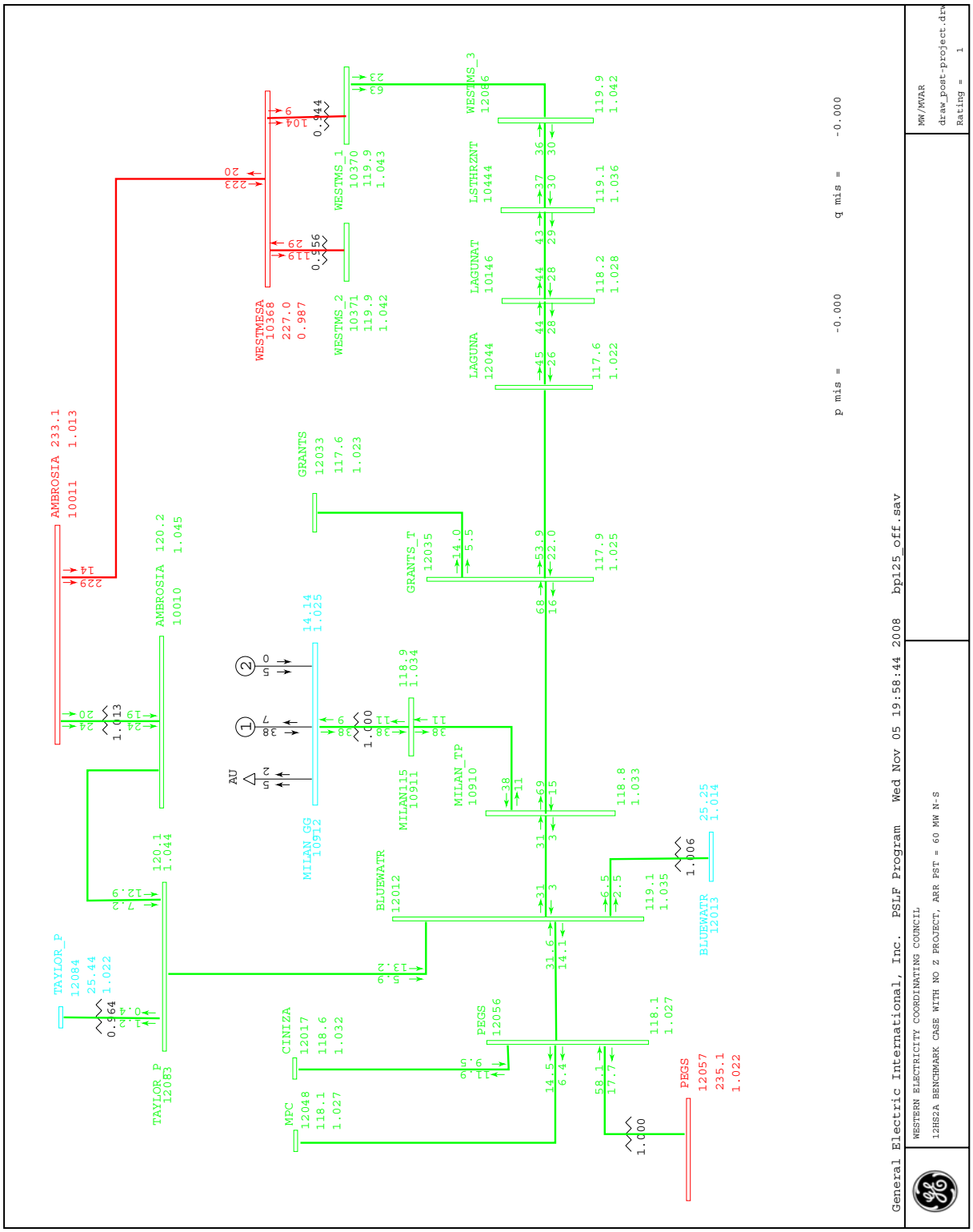
General Electric International, Inc. PSLF Program Wed Nov 05 19:58:44 2008 bp125_off.sav
WESTERN ELECTRICITY COORDINATING COUNCIL
12HS2A BENCHMARK CASE WITH NO Z PROJECT, ARR PST = 60 MW N-S
MW/MVAR
draw_post-project.drw
Rating = 1
p mis = -0.000
q mis = -0.000
AMBROSIA 233.1
10011 1.013
AMBROSIA 120.2
10010 1.045
WESTMESA
10368
227.0
0.987
WESTMS_1
10370
119.9
1.043
WESTMS_2
10371
119.9
1.042
WESTMS_3
12086
LSTHRZNT
10444
LAGUNAT
10146
LAGUNA
12044
GRANTS
12033
117.6
1.023
GRANTS_T
12035
MILAN_TP
10910
MILAN115
10911
MILAN_GG
10912
BLUEWATR
12012
BLUEWATR
12013
TAYLOR_P
12084
25.44
1.022
TAYLOR_P
12083
120.1
1.044
CINIZA
12017
118.6
1.032
MPC
12048
118.1
1.027
PEGS
12056
PEGS
12057
235.1
1.022
25.25
1.014
AU

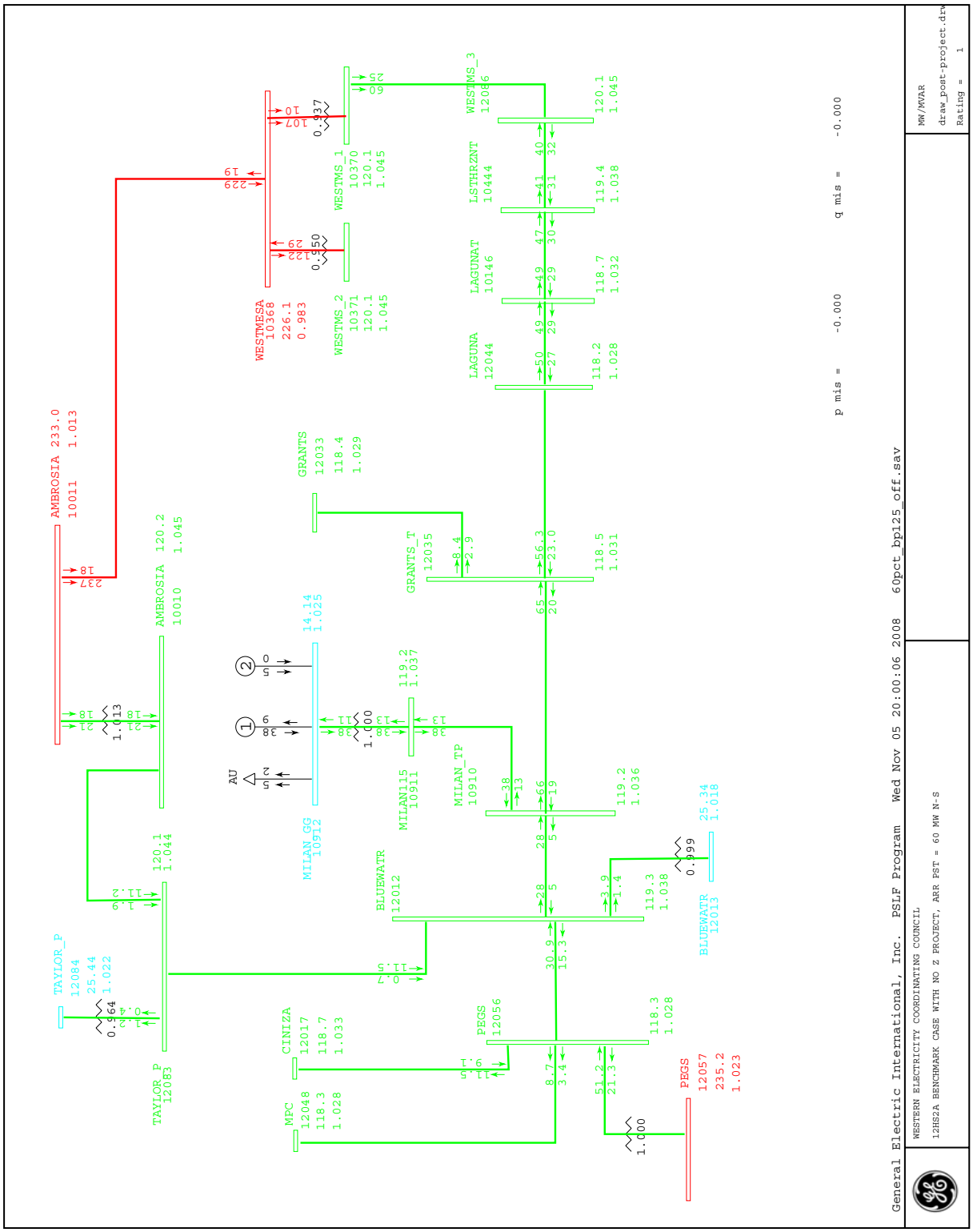
General Electric International, Inc. PSLF Program Wed Nov 05 20:00:06 2008 60pct_bp125_off.sav
WESTERN ELECTRICITY COORDINATING COUNCIL
12HS2A BENCHMARK CASE WITH NO Z PROJECT, ARR PST = 60 MW N-S
p mis = -0.000 q mis = -0.000
MW/MVAR
draw_post-project.drw
Rating = 1
AMBROSIA 233.0
10011 1.013
AMBROSIA 120.2
10010 1.045
TAYLOR_P
12084
25.44
1.022
TAYLOR_P
12083
120.1
1.044
WESTMESA
10368
226.1
0.983
WESTMS_1
10370
120.1
1.045
WESTMS_2
10371
120.1
1.045
WESTMS_3
12086
LSTHRZNT
10444
LAGUNAT
10146
LAGUNA
12044
GRANTS
12033
118.4
1.029
GRANTS_T
12035
MILAN_TP
10910
MILAN115
10911
MILAN_GG
10912
14.14
1.025
BLUEWATR
12012
BLUEWATR
12013
25.34
1.018
PEGS
12056
PEGS
12057
235.2
1.023
CINIZA
12017
118.7
1.033
MPC
12048
118.3
1.028
AU

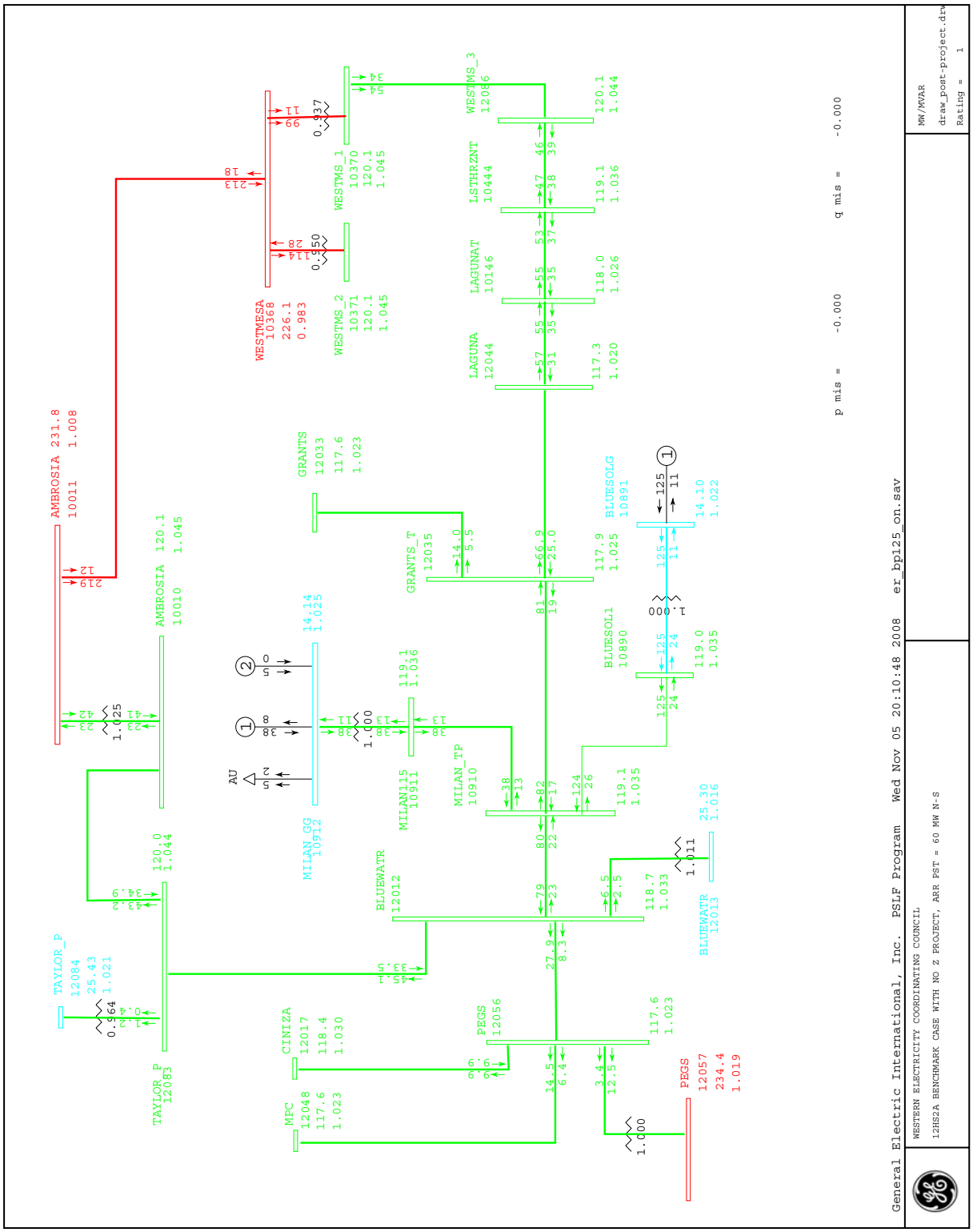
General Electric International, Inc. PSLF Program Wed Nov 05 20:10:48 2008 er_bp125_on.sav
WESTERN ELECTRICITY COORDINATING COUNCIL
12HS2A BENCHMARK CASE WITH NO Z PROJECT, ARR PST = 60 MW N-S
MW/MVAR
draw_post-project.drw
Rating = 1
p mis = -0.000
q mis = -0.000
AMBROSIA 231.8
10011 1.008
AMBROSIA 120.1
10010 1.045
WESTMESA
10368
226.1
0.983
WESTMS_1
10370
120.1
1.045
WESTMS_2
10371
120.1
1.045
WESTMS_3
12086
LSTHRZNT
10444
LAGUNAT
10146
LAGUNA
12044
117.3
1.020
118.0
1.026
119.1
1.036
120.1
1.044
GRANTS
12033
117.6
1.023
GRANTS_T
12035
BLUESOLG
10891
BLUESOL1
10890
14.10
1.022
119.0
1.035
117.9
1.025
MILAN_TP
10910
MILAN115
10911
MILAN_GG
10912
14.14
1.025
119.1
1.036
BLUEWATR
12012
BLUEWATR
12013
25.30
1.016
118.7
1.033
119.1
1.035
TAYLOR_P
12084
25.43
1.021
TAYLOR_P
12083
120.0
1.044
CINIZA
12017
118.4
1.030
MPC
12048
117.6
1.023
PEGS
12056
117.6
1.023
PEGS
12057
234.4
1.019
AU

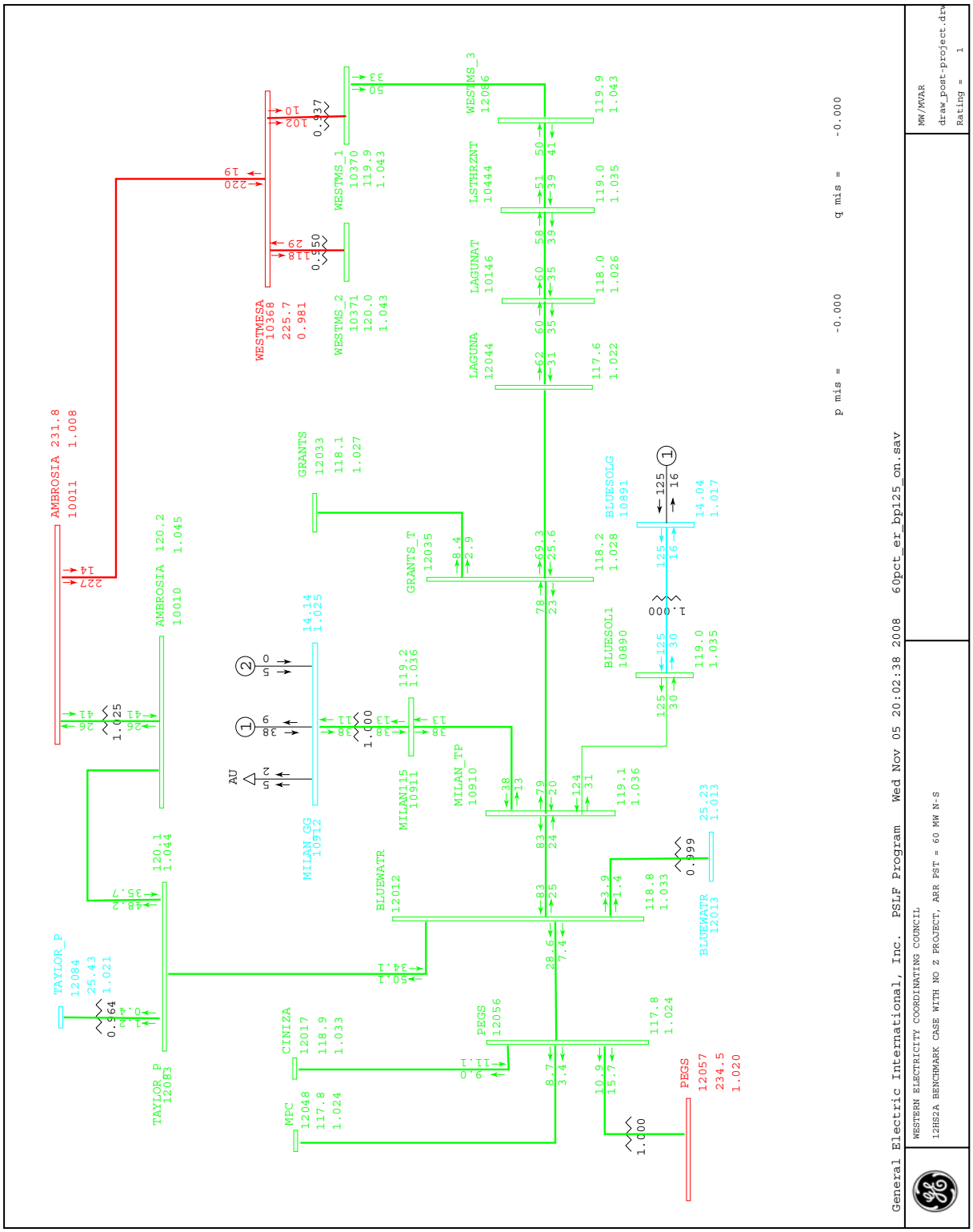
General Electric International, Inc. PSLF Program Wed Nov 05 20:02:38 2008 60pct_er_bp125_on.sav
WESTERN ELECTRICITY COORDINATING COUNCIL
12HS2A BENCHMARK CASE WITH NO Z PROJECT, ARR PST = 60 MW N-S
MW/MVAR
draw_post-project.drw
Rating = 1
p mis = -0.000
q mis = -0.000
AMBROSIA 231.8
10011 1.008
AMBROSIA 120.2
10010 1.045
TAYLOR_P
12084
25.43
1.021
TAYLOR_P
12083
120.1
1.044
WESTMESA
10368
225.7
0.981
WESTMS_1
10370
119.9
1.043
WESTMS_2
10371
120.0
1.043
WESTMS_3
12086
LAGUNA
12044
117.6
1.022
LAGUNAT
10146
118.0
1.026
LSTHRZNT
10444
119.0
1.035
GRANTS
12033
118.1
1.027
GRANTS_T
12035
118.2
1.028
BLUESOLG
10891
14.04
1.017
BLUESOL1
10890
119.0
1.035
MILAN_TP
10910
119.1
1.036
MILAN115
10911
119.2
1.036
MILAN_GG
10912
14.14
1.025
BLUEWATR
12012
118.8
1.033
BLUEWATR
12013
25.23
1.013
PEGS
12056
117.8
1.024
PEGS
12057
234.5
1.020
CINIZA
12017
118.9
1.033
MPC
12048
117.8
1.024
AU

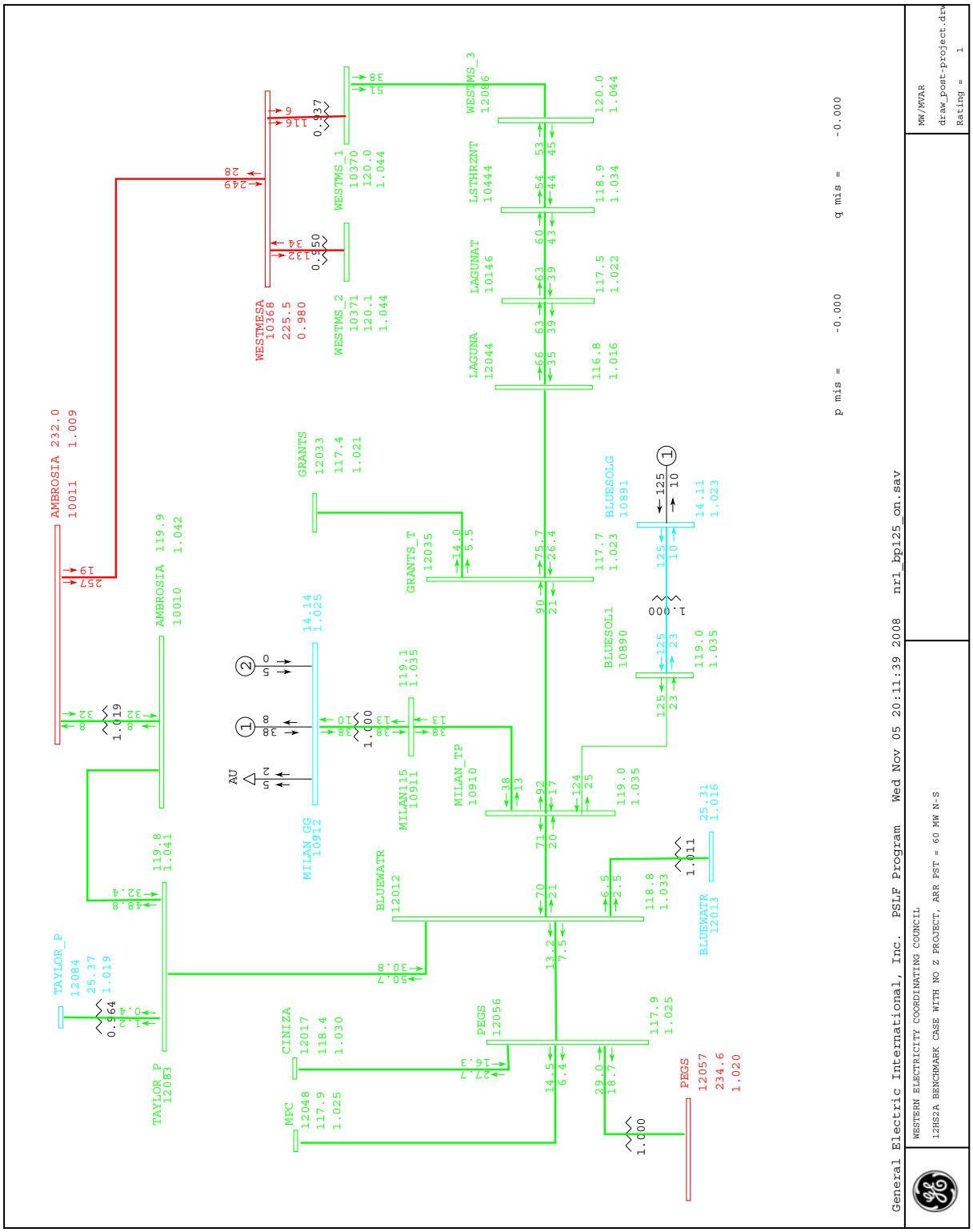
General Electric International, Inc. PSLF Program Wed Nov 05 20:11:39 2008 nr1_bp125_on.sav
WESTERN ELECTRICITY COORDINATING COUNCIL
12HS2A BENCHMARK CASE WITH NO Z PROJECT, ARR PST = 60 MW N-S
MW/MVAR
draw_post-project.drw
Rating = 1
p mis = -0.000
q mis = -0.000
AMBROSIA 232.0
10011 1.009
AMBROSIA 119.9
10010 1.042
TAYLOR_P
12084
25.37
1.019
TAYLOR_P
12083
119.8
1.041
WESTMESA
10368
225.5
0.980
WESTMS_1
10370
120.0
1.044
WESTMS_2
10371
120.1
1.044
WESTMS_3
12086
120.0
1.044
LSTHRZNT
10444
118.9
1.034
LAGUNAT
10146
117.5
1.022
LAGUNA
12044
116.8
1.016
GRANTS
12033
117.4
1.021
GRANTS_T
12035
14.0
5.5
BLUESOLG
10891
14.11
1.023
BLUESOL1
10890
119.0
1.035
117.7
1.023
MILAN_GG
10912
14.14
1.025
MILAN115
10911
119.1
1.035
MILAN_TP
10910
119.0
1.035
BLUEWATR
12012
118.8
1.033
BLUEWATR
12013
25.31
1.016
PEGS
12056
117.9
1.025
PEGS
12057
234.6
1.020
CINIZA
12017
118.4
1.030
MPC
12048
117.9
1.025
AU

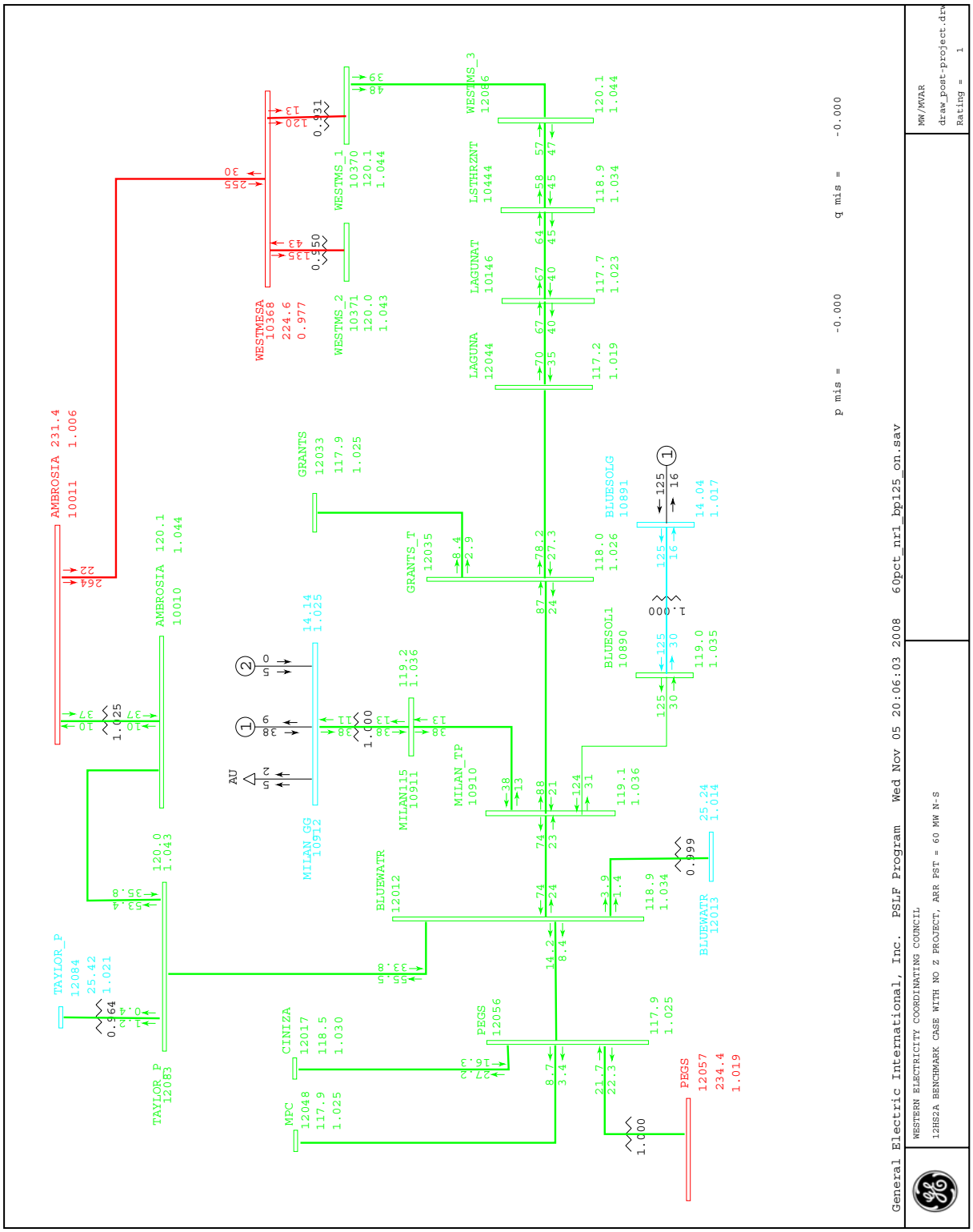
General Electric International, Inc. PSLF Program Wed Nov 05 20:06:03 2008 60pct_nr1_bp125_on.sav
WESTERN ELECTRICITY COORDINATING COUNCIL
12HS2A BENCHMARK CASE WITH NO Z PROJECT, ARR PST = 60 MW N-S
MW/MVAR
draw_post-project.drw
Rating = 1
p mis = -0.000
q mis = -0.000
AMBROSIA 231.4
10011 1.006
AMBROSIA 120.1
10010 1.044
TAYLOR_P
12084
25.42
1.021
TAYLOR_P
12083
120.0
1.043
MPC
12048
117.9
1.025
CINIZA
12017
118.5
1.030
WESTMESA
10368
224.6
0.977
WESTMS_1
10370
120.1
1.044
WESTMS_2
10371
120.0
1.043
WESTMS_3
12086
120.1
1.044
LSTHRZNT
10444
118.9
1.034
LAGUNAT
10146
117.7
1.023
LAGUNA
12044
117.2
1.019
GRANTS
12033
117.9
1.025
GRANTS_T
12035
118.0
1.026
BLUESOLG
10891
14.04
1.017
BLUESOL1
10890
119.0
1.035
MILAN_TP
10910
119.1
1.036
MILAN115
10911
119.2
1.036
MILAN_GG
10912
14.14
1.025
BLUEWATR
12012
118.9
1.034
BLUEWATR
12013
25.24
1.014
PEGS
12056
117.9
1.025
PEGS
12057
234.4
1.019
AU

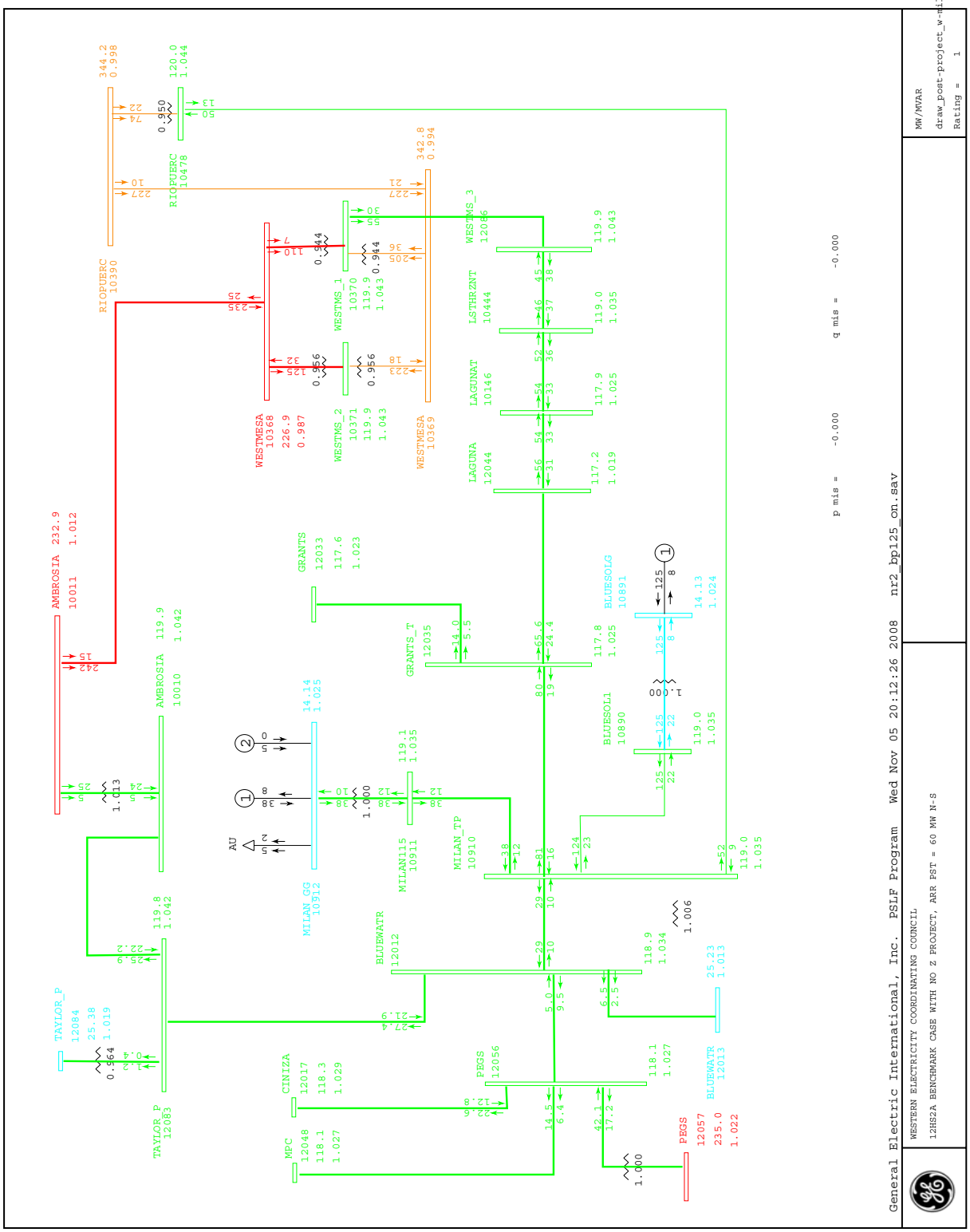
General Electric International, Inc. PSLF Program Wed Nov 05 20:12:26 2008 nr2_bp125_on.sav
WESTERN ELECTRICITY COORDINATING COUNCIL
12HS2A BENCHMARK CASE WITH NO Z PROJECT, ARR PST = 60 MW N-S
draw_post-project_w-milan-riopuerpc_v3.drw
Rating = 1
MW/MVAR
p mis = -0.000
q mis = -0.000
AMBROSIA 232.9 10011 1.012
AMBROSIA 119.9 1.042 10010
RIOPUERC 10390
RIOPUERC 10478
344.2 0.998
120.0 1.044
342.8 0.994
WESTMESA 10368 226.9 0.987
WESTMESA 10369
WESTMS_1 10370 119.9 1.043
WESTMS_2 10371 119.9 1.043
WESTMS_3 12086
LSTHRZNT 10444
LAGUNAT 10146
LAGUNA 12044
GRANTS 12033 117.6 1.023
GRANTS_T 12035
BLUESOLG 10891
BLUESOL1 10890
MILAN_GG 10912
MILAN115 10911
MILAN_TP 10910
BLUEWATR 12012
TAYLOR_P 12084 25.38 1.019
TAYLOR_P 12083
CINIZA 12017 118.3 1.029
MPC 12048 118.1 1.027
PEGS 12056
PEGS 12057 235.0 1.022
BLUEWATR 12013
AU

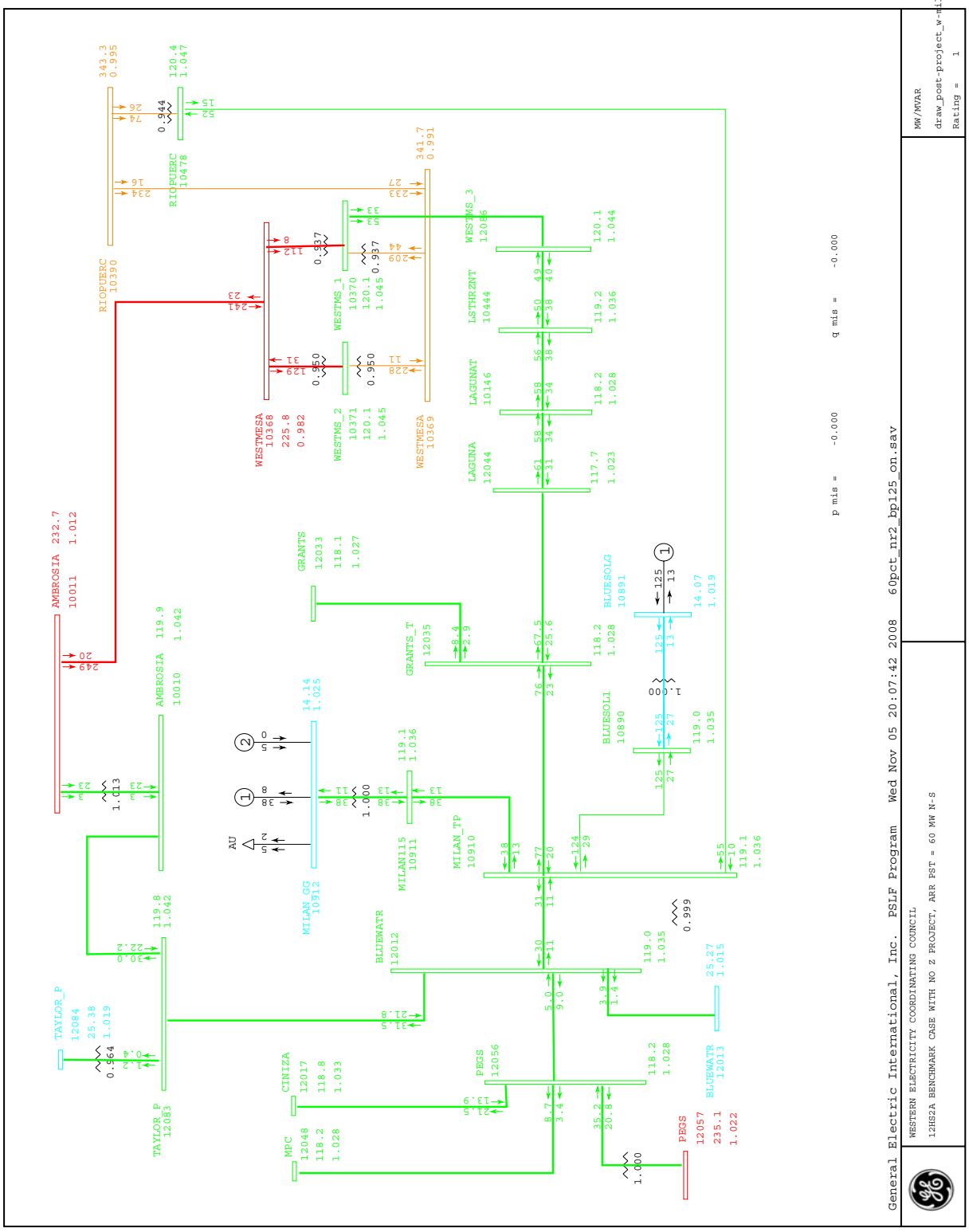
General Electric International, Inc. PSLF Program Wed Nov 05 20:07:42 2008 60pct_nr2_bp125_on.sav
WESTERN ELECTRICITY COORDINATING COUNCIL
12HS2A BENCHMARK CASE WITH NO Z PROJECT, ARR PST = 60 MW N-S
MW/MVAR
draw_post-project_w-milan-riopuerpc_v3.drw
Rating = 1
p mis = -0.000
q mis = -0.000
RIOPUERC 10390
RIOPUERC 10478
WESTMSA 10368
WESTMSA 10369
WESTMS_1 10370
WESTMS_2 10371
WESTMS_3 12086
LSTHRZNT 10444
LAGUNAT 10146
LAGUNA 12044
AMBROSIA 10011
AMBROSIA 10010
GRANTS 12033
GRANTS_T 12035
BLUESOLG 10891
BLUESOL1 10890
MILAN_GG 10912
MILAN115 10911
MILAN_TP 10910
BLUEWATR 12012
BLUEWATR 12013
TAYLOR_P 12084
TAYLOR_P 12083
CINIZA 12017
MPC 12048
PEGS 12056
PEGS 12057

Appendix 2
Powerflow Results

Post-Contingency Branch Overloads

Contingency	Monitored Element	Rating	XXX125_off	er_XXX125_on	nr1_XXX125_on	nr2_XXX125_on	60pct_XXX125_off	60pct_er_XXX125_on	60pct_nr1_XXX125_on	60pct_nr2_XXX125_on
BLUEWATR-AMBROSIA 115 kV	LAGUNA 115.00-GRANTS_T 115.00 ck=1	497 Amps							0.915	
BLUEWATR-AMBROSIA 115 kV	MILAN_TP 115.00-GRANTS_T 115.00 ck=1	497 Amps		0.904	1.003				0.987	
BLUEWATR-AMBROSIA 115 kV	MKCOWIND 34.50-MKCOWIND 34.50 ck=1	1841 Amps		0.925	0.912	0.91		0.922	0.916	0.91
BLUEWATR-AMBROSIA 115 kV	MKCOWIND 115.00-MKCOWIND 34.50 ck=1	110 MVA		0.953	0.941			0.949	0.944	
BLUEWATR-MILAN 115 kV	LAGUNA 115.00-GRANTS_T 115.00 ck=1	497 Amps		1.462	1.462			1.514	1.515	
BLUEWATR-MILAN 115 kV	LAGUNA 115.00-LAGUNAT 115.00 ck=1	497 Amps		1.403	1.404			1.477	1.477	
BLUEWATR-MILAN 115 kV	LAGUNAT 115.00-LSTHRZNT 115.00 ck=1	497 Amps		1.398	1.398			1.471	1.471	
BLUEWATR-MILAN 115 kV	LSTHRZNT 115.00-WESTMS_3 115.00 ck=1	497 Amps		1.349	1.349			1.422	1.422	
BLUEWATR-MILAN 115 kV	MILAN_TP 115.00-GRANTS_T 115.00 ck=1	497 Amps		1.593	1.593	0.957		1.594	1.594	0.937
BLUEWATR-PEGS 115 kV	BLUESOL1 115.00-BLUESOLG 13.80 ck=1	133 MVA		0.969				0.978	0.977	
BLUEWATR-PEGS 115 kV	MILAN_TP 115.00-GRANTS_T 115.00 ck=1	497 Amps			0.93				0.907	
FOURCORN-WESTMESA 345 kV	LAGUNA 115.00-GRANTS_T 115.00 ck=1	497 Amps			0.961			0.902	0.987	
FOURCORN-WESTMESA 345 kV	LAGUNA 115.00-LAGUNAT 115.00 ck=1	497 Amps			0.902				0.949	
FOURCORN-WESTMESA 345 kV	LAGUNAT 115.00-LSTHRZNT 115.00 ck=1	497 Amps							0.944	
FOURCORN-WESTMESA 345 kV	MARQUEZT 115.00-UNSER 115.00 ck=1	668 Amps			0.941				0.962	0.907
FOURCORN-WESTMESA 345 kV	MILAN_TP 115.00-GRANTS_T 115.00 ck=1	497 Amps		1.004	1.088	0.96		0.978	1.064	0.933
FOURCORN-WESTMESA 345 kV	MKCOWIND 115.00-MARQUEZT 115.00 ck=1	668 Amps			0.949			0.907	0.97	0.915
FOURCORN-WESTMESA 345 kV	NORTON_2 115.00-HERNANDZ 115.00 ck=1	879 Amps	0.958	0.957	0.921		0.971	0.97	0.935	0.911
FOURCORN-WESTMESA 345 kV	OJO 115.00-HERNANDZ 115.00 ck=1	904 Amps	0.914	0.913			0.924	0.924		
FOURCORN-WESTMESA	OJO 345.00-OJO 115.00 ck=1	180	0.931	0.93	0.905		0.94	0.939	0.914	

Contingency	Monitored Element	Rating	XXX125_off	er_XXX125_on	nr1_XXX125_on	nr2_XXX125_on	60pct_XXX125_off	60pct_er_XXX125_on	60pct_nr1_XXX125_on	60pct_nr2_XXX125_on
345 kV		MVA								
FOURCORN-WESTMESA 345 kV	PECOS 46.00-CANYON 46.00 ck=1	515 Amps	0.906	0.907	0.903		0.909	0.91	0.907	0.901
FOURCORN-WESTMESA 345 kV	SAN_JUAN 345.00-RIOPUERC 345.00 ck=1	2000 Amps	0.938	0.937	0.902		0.95	0.949	0.915	
FOURCORN-WESTMESA 345 kV	SAN_JUAN 345.00-SJUAN_G2 24.00 ck=1	357 MVA	0.914	0.914	0.908	0.903	0.916	0.917	0.911	0.905
FOURCORN-WESTMESA 345 kV	SAN_JUAN 345.00-SJUAN_G4 22.00 ck=1	585 MVA	0.961	0.968	0.967	0.952	0.969	0.977	0.976	0.961
FOURCORN-WESTMESA 345 kV	ZIA_2 46.00-PECOS 46.00 ck=1	515 Amps	0.976	0.976	0.972	0.966	0.979	0.98	0.976	0.97
MILAN-WESTMESA 115 kV	BLUEWATR 115.00-MILAN_TP 115.00 ck=1	497 Amps		1.621	1.619	0.963		1.624	1.624	0.952
MILAN-WESTMESA 115 kV	MKCOWIND 115.00-MARQUEZT 115.00 ck=1	668 Amps							0.904	
PEGS-AMBROSIA 230 kV	AMBROSIA 115.00-TAYLOR_P 115.00 ck=1	673 Amps			1.273	0.992			1.339	1.048
PEGS-AMBROSIA 230 kV	BLUEWATR 115.00-PEGS 115.00 ck=1	728 Amps	1.04			0.95	1.067			0.98
PEGS-AMBROSIA 230 kV	LAGUNA 115.00-GRANTS_T 115.00 ck=1	497 Amps			0.958				0.988	
PEGS-AMBROSIA 230 kV	LAGUNA 115.00-LAGUNAT 115.00 ck=1	497 Amps			0.902				0.951	
PEGS-AMBROSIA 230 kV	LAGUNAT 115.00-LSTHRZNT 115.00 ck=1	497 Amps							0.945	
PEGS-AMBROSIA 230 kV	MILAN_TP 115.00-GRANTS_T 115.00 ck=1	497 Amps		0.916	1.081	0.942			1.062	0.918
PEGS-AMBROSIA 230 kV	TAYLOR_P 115.00-BLUEWATR 115.00 ck=1	673 Amps			1.282	1.001			1.348	1.057
PEGS-YAHTAHEY 115 kV	MILAN_TP 115.00-GRANTS_T 115.00 ck=1	497 Amps			0.94				0.914	
SANJUAN-RIOPUERCO 345 kV	AMBROSIA 230.00-WESTMESA 230.00 ck=1	1009 Amps							0.906	
SANJUAN-RIOPUERCO 345 kV	BLUESOL1 115.00-BLUESOLG 13.80 ck=1	133 MVA				0.965				
SANJUAN-RIOPUERCO 345 kV	CANYON 46.00-FT_MARCY 46.00 ck=1	515 Amps	0.908	0.906	0.902		0.915	0.914	0.91	
SANJUAN-RIOPUERCO 345 kV	FOURCORN 345.00-WESTMESA 345.00 ck=1	2000 Amps	0.927	0.924			0.941	0.939	0.905	
SANJUAN-RIOPUERCO 345 kV	LAGUNA 115.00-GRANTS_T 115.00 ck=1	497 Amps		0.933	1.015			0.96	1.044	
SANJUAN-RIOPUERCO 345 kV	LAGUNA 115.00-LAGUNAT 115.00 ck=1	497 Amps			0.955			0.922	1.006	
SANJUAN-RIOPUERCO	LAGUNAT 115.00-LSTHRZNT 115.00 ck=1	497			0.95			0.917	1.001	

Contingency	Monitored Element	Rating	XXX125_off	er_XXX125_on	nr1_XXX125_on	nr2_XXX125_on	60pct_XXX125_off	60pct_er_XXX125_on	60pct_nr1_XXX125_on	60pct_nr2_XXX125_on
345 kV		Amps								
SANJUAN-RIOPUERCO 345 kV	LSTHRZNT 115.00-WESTMS_3 115.00 ck=1	497 Amps							0.945	
SANJUAN-RIOPUERCO 345 kV	MARQUEZT 115.00-UNSER 115.00 ck=1	668 Amps	0.92	0.929	0.989	0.917	0.943	0.952	1.014	0.937
SANJUAN-RIOPUERCO 345 kV	MILAN_TP 115.00-GRANTS_T 115.00 ck=1	497 Amps	0.936	1.063	1.145	0.982	0.913	1.039	1.123	0.954
SANJUAN-RIOPUERCO 345 kV	MKCOWIND 115.00-MARQUEZT 115.00 ck=1	668 Amps	0.928	0.936	0.997	0.925	0.951	0.959	1.022	0.944
SANJUAN-RIOPUERCO 345 kV	MKCOWIND 115.00-MKCOWIND 34.50 ck=1	110 MVA	0.946	0.944	0.946		0.946	0.946	0.946	0.939
SANJUAN-RIOPUERCO 345 kV	PECOS 46.00-CANYON 46.00 ck=1	515 Amps	0.93	0.929	0.924	0.91	0.937	0.937	0.932	0.916
SANJUAN-RIOPUERCO 345 kV	REEVES_2 115.00-REEVE_G3 13.80 ck=1	85 MVA	0.937	0.92	0.912		0.957	0.95	0.939	
SANJUAN-RIOPUERCO 345 kV	SAN_JUAN 345.00-SJUAN_G2 24.00 ck=1	357 MVA	0.905	0.905			0.907	0.907	0.902	
SANJUAN-RIOPUERCO 345 kV	SAN_JUAN 345.00-SJUAN_G4 22.00 ck=1	585 MVA	0.954	0.961	0.96		0.962	0.969	0.969	
SANJUAN-RIOPUERCO 345 kV	SANDIA_2 46.00-ID-TA 46.00 ck=1	389 Amps	0.916	0.915	0.912		0.924	0.919	0.917	0.904
SANJUAN-RIOPUERCO 345 kV	WESTMESA 230.00-WESTMS_2 115.00 ck=1	200 MVA							0.924	
SANJUAN-RIOPUERCO 345 kV	ZIA_2 46.00-PECOS 46.00 ck=1	515 Amps	1.001	0.999	0.995	0.98	1.009	1.008	1.003	0.986
WESTMESA-AMBROSIA 230 kV	BLUESOL1 115.00-BLUESOLG 13.80 ck=1	133 MVA		0.966				0.978		
WESTMESA-AMBROSIA 230 kV	LAGUNA 115.00-GRANTS_T 115.00 ck=1	497 Amps		1.016	1.152	0.979	0.931	1.048	1.185	1.005
WESTMESA-AMBROSIA 230 kV	LAGUNA 115.00-LAGUNAT 115.00 ck=1	497 Amps		0.959	1.094	0.922		1.011	1.148	0.968
WESTMESA-AMBROSIA 230 kV	LAGUNAT 115.00-LSTHRZNT 115.00 ck=1	497 Amps		0.953	1.089	0.916		1.005	1.142	0.962
WESTMESA-AMBROSIA 230 kV	LSTHRZNT 115.00-WESTMS_3 115.00 ck=1	497 Amps		0.901	1.037			0.953	1.091	0.909
WESTMESA-AMBROSIA 230 kV	MARQUEZT 115.00-UNSER 115.00 ck=1	668 Amps	1.003	1.003	1.11	1.028	1.028	1.027	1.135	1.05
WESTMESA-AMBROSIA 230 kV	MILAN_TP 115.00-GRANTS_T 115.00 ck=1	497 Amps	1.022	1.14	1.278	1.102	1.004	1.122	1.26	1.079
WESTMESA-AMBROSIA 230 kV	MKCOWIND 115.00-MARQUEZT 115.00 ck=1	668 Amps	1.011	1.011	1.118	1.036	1.036	1.035	1.143	1.057
WESTMESA-AMBROSIA 230 kV	UNSER 115.00-WESTMS_1 115.00 ck=1	668 Amps			0.98		0.9		1.009	0.919
WESTMESA-MKCOWIND	LAGUNA 115.00-GRANTS_T 115.00 ck=1	497			0.914				0.941	

Contingency	Monitored Element	Rating	XXX125_off	er_XXX125_on	nr1_XXX125_on	nr2_XXX125_on	60pct_XXX125_off	60pct_er_XXX125_on	60pct_nr1_XXX125_on	60pct_nr2_XXX125_on
115 kV		Amps								
WESTMESA-MKCOWIND 115 kV	LAGUNA 115.00-LAGUNAT 115.00 ck=1	497 Amps							0.904	
WESTMESA-MKCOWIND 115 kV	MILAN_TP 115.00-GRANTS_T 115.00 ck=1	497 Amps		0.935	1.035	0.907		0.912	1.014	
WESTMS-AMBRO-BIST 230 kV	LAGUNA 115.00-GRANTS_T 115.00 ck=1	497 Amps	0.926	1.023	1.268	1.029	0.97	1.067	1.31	1.064
WESTMS-AMBRO-BIST 230 kV	LAGUNA 115.00-LAGUNAT 115.00 ck=1	497 Amps		0.966	1.21	0.972	0.933	1.03	1.273	1.027
WESTMS-AMBRO-BIST 230 kV	LAGUNAT 115.00-LSTHRZNT 115.00 ck=1	497 Amps		0.961	1.204	0.966	0.927	1.024	1.267	1.021
WESTMS-AMBRO-BIST 230 kV	LSTHRZNT 115.00-WESTMS_3 115.00 ck=1	497 Amps		0.909	1.154	0.915		0.973	1.217	0.969
WESTMS-AMBRO-BIST 230 kV	MARQUEZT 115.00-UNSER 115.00 ck=1	668 Amps	1.025	1.009	1.209	1.076	1.06	1.043	1.244	1.106
WESTMS-AMBRO-BIST 230 kV	MILAN_TP 115.00-GRANTS_T 115.00 ck=1	497 Amps	1.05	1.148	1.395	1.154	1.043	1.141	1.387	1.139
WESTMS-AMBRO-BIST 230 kV	MKCOWIND 115.00-MARQUEZT 115.00 ck=1	668 Amps	1.033	1.017	1.217	1.084	1.068	1.051	1.251	1.114
WESTMS-AMBRO-BIST 230 kV	UNSER 115.00-WESTMS_1 115.00 ck=1	668 Amps			1.083	0.946	0.933	0.916	1.118	0.976
WESTMS-AMBRO-PEGS 230 kV	AMBROSIA 115.00-TAYLOR_P 115.00 ck=1	673 Amps			0.946				1.005	
WESTMS-AMBRO-PEGS 230 kV	BLUEWATR 115.00-PEGS 115.00 ck=1	728 Amps	0.93				0.954			
WESTMS-AMBRO-PEGS 230 kV	CINIZA 115.00-WINGATE 115.00 ck=1	482 Amps			1.045				1.067	
WESTMS-AMBRO-PEGS 230 kV	ENRON_TS 115.00-GALLUPPG 115.00 ck=1	482 Amps			0.958				1.006	
WESTMS-AMBRO-PEGS 230 kV	ENRON_TS 115.00-WINGATE 115.00 ck=1	482 Amps			1.033				1.055	
WESTMS-AMBRO-PEGS 230 kV	GALLUPPG 115.00-YAHTAHEY 115.00 ck=1	482 Amps							0.952	
WESTMS-AMBRO-PEGS 230 kV	LAGUNA 115.00-GRANTS_T 115.00 ck=1	497 Amps	0.972	1.051	1.236	1.04	1.007	1.087	1.271	1.07
WESTMS-AMBRO-PEGS 230 kV	LAGUNA 115.00-LAGUNAT 115.00 ck=1	497 Amps	0.915	0.994	1.179	0.983	0.97	1.049	1.234	1.032
WESTMS-AMBRO-PEGS 230 kV	LAGUNAT 115.00-LSTHRZNT 115.00 ck=1	497 Amps	0.909	0.989	1.173	0.977	0.964	1.043	1.228	1.026
WESTMS-AMBRO-PEGS 230 kV	LSTHRZNT 115.00-WESTMS_3 115.00 ck=1	497 Amps		0.937	1.123	0.926	0.912	0.992	1.178	0.974
WESTMS-AMBRO-PEGS 230 kV	MARQUEZT 115.00-UNSER 115.00 ck=1	668 Amps	0.974	0.988	1.074	0.99	0.998	1.011	1.097	1.011
WESTMS-AMBRO-PEGS	MILAN_TP 115.00-GRANTS_T 115.00 ck=1	497	1.095	1.176	1.363	1.165	1.08	1.161	1.348	1.145

Contingency	Monitored Element	Rating	XXX125_off	er_XXX125_on	nr1_XXX125_on	nr2_XXX125_on	60pct_XXX125_off	60pct_er_XXX125_on	60pct_nr1_XXX125_on	60pct_nr2_XXX125_on
230 kV		Amps								
WESTMS-AMBRO-PEGS 230 kV	MKCOWIND 115.00-MARQUEZT 115.00 ck=1	668 Amps	0.982	0.996	1.082	0.998	1.006	1.019	1.105	1.019
WESTMS-AMBRO-PEGS 230 kV	PEGS 115.00-CINIZA 115.00 ck=1	482 Amps			1.063				1.08	0.91
WESTMS-AMBRO-PEGS 230 kV	TAYLOR_P 115.00-BLUEWATR 115.00 ck=1	673 Amps			0.955				1.014	
WESTMS-AMBRO-PEGS 230 kV	UNSER 115.00-WESTMS_1 115.00 ck=1	668 Amps			0.946				0.97	

Post-Contingency Low Voltage Buses

Busname	Bus kV	Contingency	Criteria	XXX125_off	er_XXX125_on	nr1_XXX125_on	nr2_XXX125_on	60pct_XXX125_off	60pct_er_XXX125_on	60pct_nr1_XXX125_on	60pct_nr2_XXX125_on
SUNSET_N	13.8	SANJUAN-RIOPUERCO 345 kV	0.95	0.945	0.945	0.946		0.945	0.945	0.945	0.946
BACA	46	SANJUAN-RIOPUERCO 345 kV	0.925					0.925			
CANYON	12.5	SANJUAN-RIOPUERCO 345 kV	0.925					0.923	0.923		
CANYON	46	SANJUAN-RIOPUERCO 345 kV	0.925					0.924	0.925		
CAPITOL	4.16	SANJUAN-RIOPUERCO 345 kV	0.925	0.922	0.923			0.915	0.915	0.919	
CAPITOL	46	SANJUAN-RIOPUERCO 345 kV	0.925	0.907	0.908	0.912		0.9	0.901	0.905	0.92
COCHITI	46	SANJUAN-RIOPUERCO 345 kV	0.925	0.923	0.924			0.917	0.918	0.921	
FT_MARCY	12.5	SANJUAN-RIOPUERCO 345 kV	0.925	0.924				0.917	0.917	0.922	
FT_MARCY	46	SANJUAN-RIOPUERCO 345 kV	0.925	0.914	0.916	0.92		0.908	0.908	0.912	
HALONA	4.16	SANJUAN-RIOPUERCO 345 kV	0.925	0.918	0.92	0.924		0.911	0.912	0.916	
HICKOX	4.16	SANJUAN-RIOPUERCO 345 kV	0.925	0.924				0.918	0.918	0.922	
HICKOX	46	SANJUAN-RIOPUERCO 345 kV	0.925	0.906	0.908	0.912		0.9	0.9	0.904	0.92
IDEAL	46	FOURCORN-WESTMESA 345 kV	0.925					0.925			
IDEAL	46	SANJUAN-RIOPUERCO 345 kV	0.925	0.904	0.905	0.908	0.921	0.896	0.901	0.903	0.915
ID-TA	46	SANJUAN-RIOPUERCO 345 kV	0.925	0.904	0.906	0.908	0.922	0.897	0.902	0.904	0.916
LABAJADA	46	SANJUAN-RIOPUERCO 345 kV	0.925	0.924				0.919	0.92	0.923	
LVGT	13.8	SANJUAN-RIOPUERCO 345 kV	0.925					0.922	0.922		
MANHTTEN	12.5	SANJUAN-RIOPUERCO 345 kV	0.925	0.917	0.919	0.924		0.91	0.911	0.915	
PECOS	12.5	SANJUAN-RIOPUERCO 345 kV	0.925					0.925			
PERALTA	12.5	SANJUAN-RIOPUERCO 345 kV	0.925	0.921	0.923			0.914	0.915	0.919	
S._ANTON	46	FOURCORN-WESTMESA 345 kV	0.925	0.914	0.914	0.915	0.922	0.91	0.913	0.914	0.917
S._ANTON	46	SANJUAN-RIOPUERCO 345 kV	0.925	0.889	0.89	0.893	0.906	0.881	0.886	0.888	0.901
S.ANTON1	12.5	SANJUAN-RIOPUERCO 345 kV	0.925					0.922			
S.ANTON2	12.5	SANJUAN-RIOPUERCO 345 kV	0.925	0.923	0.925			0.916	0.921	0.923	
SANDIA	345	SANJUAN-RIOPUERCO 345 kV	0.925					0.92	0.92	0.922	
TIJERAS	46	FOURCORN-WESTMESA 345 kV	0.925					0.923			
TIJERAS	46	SANJUAN-RIOPUERCO 345 kV	0.925	0.902	0.904	0.906	0.92	0.895	0.9	0.902	0.914
WESTMESA	230	SANJUAN-RIOPUERCO 345 kV	0.925					0.924		0.922	
ZAMORA	46	FOURCORN-WESTMESA 345 kV	0.925					0.922	0.924		
ZAMORA	46	SANJUAN-RIOPUERCO 345 kV	0.925	0.9	0.902	0.904	0.918	0.893	0.898	0.9	0.912
ZAMORA_T	46	FOURCORN-WESTMESA 345 kV	0.925					0.923			
ZAMORA_T	46	SANJUAN-RIOPUERCO 345 kV	0.925	0.902	0.904	0.906	0.919	0.895	0.899	0.902	0.914

Post-Contingency High Voltage Buses

Busname	Bus kV	Contingency	Criteria	XXX125_off	er_XXX125_on	nr1_XXX125_on	nr2_XXX125_on	60pct_XXX125_off	60pct_er_XXX125_on	60pct_nr1_XXX125_on	60pct_nr2_XXX125_on
ALLISON#	115	PEGS-YAHTAHEY 115 kV	1.05	1.05	1.05	1.054					
ALLISONT	115	PEGS-YAHTAHEY 115 kV	1.05	1.051	1.051	1.055					
AMBROSIA	115	BLUEWATR-AMBROSIA 115 kV	1.05		1.057	1.053	1.05		1.057	1.057	1.05
AMBROSIA	115	BLUEWATR-MILAN 115 kV	1.05							1.05	
AMBROSIA	115	WESTMESA-AMBROSIA 230 kV	1.05	1.056	1.056	1.053	1.053	1.058	1.056	1.056	1.054
AMBROSIA	115	WESTMS-AMBRO-BIST 230 kV	1.05	1.053	1.053		1.051	1.055	1.053	1.052	1.052
BLUESOLG	13.8	SANJUAN-RIOPUERCO 345 kV	1.05				1.056				1.054
GAMERCO	115	PEGS-YAHTAHEY 115 kV	1.05			1.053					
KERMAC	115	BLUEWATR-AMBROSIA 115 kV	1.05		1.057	1.053	1.05		1.056	1.056	
KERMAC	115	BLUEWATR-MILAN 115 kV	1.05							1.05	
KERMAC	115	WESTMESA-AMBROSIA 230 kV	1.05	1.056	1.055	1.053	1.053	1.057	1.055	1.055	1.054
KERMAC	115	WESTMS-AMBRO-BIST 230 kV	1.05	1.053	1.052		1.05	1.054	1.052	1.052	1.051
KERMACT	115	BLUEWATR-AMBROSIA 115 kV	1.05		1.057	1.053	1.05		1.056	1.056	
KERMACT	115	BLUEWATR-MILAN 115 kV	1.05							1.05	
KERMACT	115	WESTMESA-AMBROSIA 230 kV	1.05	1.056	1.055	1.053	1.053	1.057	1.055	1.055	1.054
KERMACT	115	WESTMS-AMBRO-BIST 230 kV	1.05	1.053	1.052		1.05	1.054	1.052	1.052	1.051
MKCOWIND	0.57	FOURCORN-WESTMESA 345 kV	1.05	1.074	1.07	1.078	1.069	1.077	1.075	1.08	1.072
MKCOWIND	0.57	PEGS-AMBROSIA 230 kV	1.05	1.055	1.051	1.068	1.059	1.057	1.055	1.07	1.061
MKCOWIND	0.57	SANJUAN-RIOPUERCO 345 kV	1.05	1.089	1.092	1.089	1.083	1.085	1.089	1.086	1.088
MKCOWIND	0.57	WESTMESA-AMBROSIA 230 kV	1.05			1.065	1.053			1.058	1.055
MKCOWIND	0.57	WESTMS-AMBRO-BIST 230 kV	1.05	1.054	1.051	1.077	1.063			1.08	1.066
MKCOWIND	0.57	WESTMS-AMBRO-PEGS 230 kV	1.05	1.063	1.062	1.076	1.067	1.057	1.059	1.079	1.069
MKCOWIND	34.5	FOURCORN-WESTMESA 345 kV	1.05	1.056	1.057	1.062	1.057	1.06	1.061	1.068	1.059
MKCOWIND	34.5	PEGS-AMBROSIA 230 kV	1.05			1.056				1.058	1.051
MKCOWIND	34.5	SANJUAN-RIOPUERCO 345 kV	1.05	1.063	1.069	1.072	1.054	1.069	1.069	1.072	1.059
MKCOWIND	34.5	WESTMESA-AMBROSIA 230 kV	1.05			1.054					
MKCOWIND	34.5	WESTMS-AMBRO-BIST 230 kV	1.05			1.067	1.052			1.071	1.054
MKCOWIND	34.5	WESTMS-AMBRO-PEGS 230 kV	1.05	1.052	1.051	1.054	1.055			1.058	1.057
PITT-MID	115	PEGS-YAHTAHEY 115 kV	1.05			1.051					
RANCHERS	115	BLUEWATR-AMBROSIA 115 kV	1.05		1.053	1.05			1.053	1.053	
RANCHERS	115	WESTMESA-AMBROSIA 230 kV	1.05	1.052	1.052			1.053	1.052	1.051	1.05
RANCHERS	115	WESTMS-AMBRO-BIST 230 kV	1.05					1.051			
SJUAN_G3	22	FOURCORN-WESTMESA 345 kV	1.05		1.05			1.051	1.051		
TAYLOR_P	115	WESTMESA-AMBROSIA 230 kV	1.05	1.055	1.054	1.052	1.052	1.057	1.054	1.054	1.053
TAYLOR_P	115	WESTMS-AMBRO-BIST 230 kV	1.05	1.052	1.051			1.054	1.052	1.051	1.051
UNITED	115	BLUEWATR-AMBROSIA 115 kV	1.05		1.057	1.053	1.05		1.056	1.056	
UNITED	115	BLUEWATR-MILAN 115 kV	1.05							1.05	
UNITED	115	WESTMESA-AMBROSIA 230 kV	1.05	1.056	1.055	1.053	1.053	1.057	1.055	1.055	1.054
UNITED	115	WESTMS-AMBRO-BIST 230 kV	1.05	1.053	1.052		1.05	1.054	1.052	1.052	1.051
YAHTAHEY	115	PEGS-YAHTAHEY 115 kV	1.05	1.056	1.056	1.06	1.055	1.05	1.05	1.054	1.055

Post-Contingency Voltage Drops

Busname	Bus kV	Contingency	Criteria	XXX125_off	er_XXX125_on	nr1_XXX125_on	60pct_XXX125_off	60pct_er_XXX125_on	60pct_nr1_XXX125_on
12ST_TAP	46	SANJUAN-RIOPUERCO 345 kV	0.06	0.063	0.062		0.068	0.067	0.063
ALCAZAR	12.5	SANJUAN-RIOPUERCO 345 kV	0.06				0.061		
ALIRE	12.5	SANJUAN-RIOPUERCO 345 kV	0.06				0.062	0.06	
ARRIBA	12.5	SANJUAN-RIOPUERCO 345 kV	0.06	0.063	0.062		0.067	0.066	0.063
ARRIBA	115	SANJUAN-RIOPUERCO 345 kV	0.06	0.064	0.063		0.069	0.068	0.064
ARRIBA_T	115	SANJUAN-RIOPUERCO 345 kV	0.06	0.064	0.063		0.069	0.068	0.064
BACA	12.5	SANJUAN-RIOPUERCO 345 kV	0.06	0.068	0.066	0.062	0.073	0.071	0.067
BACA	46	SANJUAN-RIOPUERCO 345 kV	0.06	0.063	0.062		0.068	0.067	0.063
BECKNER	12.5	SANJUAN-RIOPUERCO 345 kV	0.06				0.062	0.06	
BECKNER	115	SANJUAN-RIOPUERCO 345 kV	0.06				0.06		
BEL_AIR	12.5	SANJUAN-RIOPUERCO 345 kV	0.06				0.06		
BEL_AIR	115	SANJUAN-RIOPUERCO 345 kV	0.06				0.061		
BELAIR_T	115	SANJUAN-RIOPUERCO 345 kV	0.06				0.06		
BEV_WOOD	115	SANJUAN-RIOPUERCO 345 kV	0.06				0.06		
CANYON	12.5	SANJUAN-RIOPUERCO 345 kV	0.06	0.067	0.065	0.062	0.073	0.071	0.068
CANYON	46	SANJUAN-RIOPUERCO 345 kV	0.06	0.066	0.064	0.061	0.072	0.07	0.067
CAPITOL	4.16	SANJUAN-RIOPUERCO 345 kV	0.06	0.072	0.07	0.067	0.079	0.077	0.074
CAPITOL	46	SANJUAN-RIOPUERCO 345 kV	0.06	0.068	0.066	0.063	0.074	0.073	0.07
CB108A	115	SANJUAN-RIOPUERCO 345 kV	0.06				0.06		
COCHITI	12.5	SANJUAN-RIOPUERCO 345 kV	0.06				0.063	0.061	
COCHITI	46	SANJUAN-RIOPUERCO 345 kV	0.06				0.06		
COLINAS	12.5	SANJUAN-RIOPUERCO 345 kV	0.06				0.061	0.06	
COLINAS	115	SANJUAN-RIOPUERCO 345 kV	0.06				0.063	0.062	
CORRALB	115	SANJUAN-RIOPUERCO 345 kV	0.06				0.06		
EB-HW	115	SANJUAN-RIOPUERCO 345 kV	0.06				0.06		
ELDORAD#	115	SANJUAN-RIOPUERCO 345 kV	0.06				0.062	0.061	
ELDORADO	12.5	SANJUAN-RIOPUERCO 345 kV	0.06				0.061		
ELDRADOT	115	SANJUAN-RIOPUERCO 345 kV	0.06				0.062	0.061	
FT_MARCY	12.5	SANJUAN-RIOPUERCO 345 kV	0.06	0.07	0.068	0.065	0.077	0.075	0.072
FT_MARCY	46	SANJUAN-RIOPUERCO 345 kV	0.06	0.067	0.065	0.062	0.073	0.072	0.069
GALLINAS	12.5	SANJUAN-RIOPUERCO 345 kV	0.06	0.063	0.062		0.067	0.066	0.063
GALLINAT	115	SANJUAN-RIOPUERCO 345 kV	0.06	0.064	0.063		0.069	0.068	0.064
HALONA	4.16	SANJUAN-RIOPUERCO 345 kV	0.06	0.071	0.069	0.065	0.077	0.075	0.072
HAWKINS	12.5	SANJUAN-RIOPUERCO 345 kV	0.06				0.06		
HERNANDZ	115	SANJUAN-RIOPUERCO 345 kV	0.06				0.062	0.062	
HICKOX	4.16	SANJUAN-RIOPUERCO 345 kV	0.06	0.07	0.068	0.065	0.077	0.075	0.072
HICKOX	46	SANJUAN-RIOPUERCO 345 kV	0.06	0.068	0.066	0.063	0.074	0.073	0.07
HW-11	115	SANJUAN-RIOPUERCO 345 kV	0.06				0.06		
HW-CG	115	SANJUAN-RIOPUERCO 345 kV	0.06				0.06		
IDEAL	4.16	SANJUAN-RIOPUERCO 345 kV	0.06	0.065	0.062	0.06	0.071	0.069	0.067
IDEAL	46	SANJUAN-RIOPUERCO 345 kV	0.06	0.062			0.067	0.066	0.064

Busname	Bus kV	Contingency	Criteria	XXX125_off	er_XXX125_on	nr1_XXX125_on	60pct_XXX125_off	60pct_er_XXX125_on	60pct_nr1_XXX125_on
ID-TA	46	SANJUAN-RIOPUERCO 345 kV	0.06	0.061			0.067	0.066	0.064
LA_JARA	69	SANJUAN-RIOPUERCO 345 kV	0.06				0.062		
LA_JARA	115	SANJUAN-RIOPUERCO 345 kV	0.06				0.061		
LABAJADA	12.5	SANJUAN-RIOPUERCO 345 kV	0.06				0.064	0.063	0.061
LABAJADA	46	SANJUAN-RIOPUERCO 345 kV	0.06				0.06		
LAWRENCE	12.5	SANJUAN-RIOPUERCO 345 kV	0.06				0.06		
LVGT	13.8	SANJUAN-RIOPUERCO 345 kV	0.06	0.063	0.061		0.067	0.066	0.062
M_PLAZA	12.5	SANJUAN-RIOPUERCO 345 kV	0.06				0.06		
MANHTTEN	12.5	SANJUAN-RIOPUERCO 345 kV	0.06	0.074	0.072	0.068	0.081	0.079	0.076
MEJIA	12.5	SANJUAN-RIOPUERCO 345 kV	0.06				0.062	0.06	
MENAUL	12.5	SANJUAN-RIOPUERCO 345 kV	0.06				0.063	0.061	
MGLLUJAN	12.5	SANJUAN-RIOPUERCO 345 kV	0.06				0.06		
PALM	12.5	SANJUAN-RIOPUERCO 345 kV	0.06				0.06		
PANORAMA	12.5	SANJUAN-RIOPUERCO 345 kV	0.06				0.061		
PECOS	12.5	SANJUAN-RIOPUERCO 345 kV	0.06	0.061			0.066	0.065	0.062
PECOS	46	SANJUAN-RIOPUERCO 345 kV	0.06	0.062	0.061		0.068	0.066	0.064
PERALTA	12.5	SANJUAN-RIOPUERCO 345 kV	0.06	0.069	0.067	0.064	0.076	0.074	0.071
POWRPLNT	12.5	SANJUAN-RIOPUERCO 345 kV	0.06				0.061		
PRINCESS	115	SANJUAN-RIOPUERCO 345 kV	0.06				0.06		
RIOHONDO	12.5	SANJUAN-RIOPUERCO 345 kV	0.06				0.061		
RODEO	12.5	SANJUAN-RIOPUERCO 345 kV	0.06				0.063	0.061	
RODEO_T	115	SANJUAN-RIOPUERCO 345 kV	0.06				0.06		
ROWE	24.9	SANJUAN-RIOPUERCO 345 kV	0.06	0.072	0.07	0.066	0.077	0.076	0.072
ROWE_TAP	115	SANJUAN-RIOPUERCO 345 kV	0.06	0.062	0.061		0.067	0.066	0.063
S._ANTON	46	SANJUAN-RIOPUERCO 345 kV	0.06	0.063	0.061		0.069	0.067	0.065
S.ANTON1	12.5	SANJUAN-RIOPUERCO 345 kV	0.06	0.068	0.065	0.063	0.074	0.072	0.07
S.ANTON2	12.5	SANJUAN-RIOPUERCO 345 kV	0.06	0.065	0.063	0.061	0.072	0.07	0.067
SANDIA_1	46	SANJUAN-RIOPUERCO 345 kV	0.06				0.061		
SANDIA_2	46	SANJUAN-RIOPUERCO 345 kV	0.06				0.063	0.061	
SANPEDRO	12.5	SANJUAN-RIOPUERCO 345 kV	0.06				0.06		
SANPEDRO	115	SANJUAN-RIOPUERCO 345 kV	0.06				0.06		
SARA_CS	115	SANJUAN-RIOPUERCO 345 kV	0.06				0.06		
SARA_CT	115	SANJUAN-RIOPUERCO 345 kV	0.06				0.06		
SARA_RD2	12.5	SANJUAN-RIOPUERCO 345 kV	0.06				0.06		
SIGNET_2	12.5	SANJUAN-RIOPUERCO 345 kV	0.06				0.06		
SIGNETIC	12.5	SANJUAN-RIOPUERCO 345 kV	0.06				0.06		
SPACHCO2	12.5	SANJUAN-RIOPUERCO 345 kV	0.06				0.063	0.062	
SPACHECO	12.5	SANJUAN-RIOPUERCO 345 kV	0.06				0.063	0.061	
SPACHECO	115	SANJUAN-RIOPUERCO 345 kV	0.06				0.06		
SPEDRO_T	115	SANJUAN-RIOPUERCO 345 kV	0.06				0.06		
STATEPEN	115	SANJUAN-RIOPUERCO 345 kV	0.06				0.06		
STORRIE	69	SANJUAN-RIOPUERCO 345 kV	0.06	0.065	0.063		0.069	0.068	0.064
STORRIE	115	SANJUAN-RIOPUERCO 345 kV	0.06	0.064	0.063		0.068	0.067	0.064
TIJERAS	12.5	SANJUAN-RIOPUERCO 345 kV	0.06	0.067	0.065	0.063	0.074	0.072	0.07
TIJERAS	46	SANJUAN-RIOPUERCO 345 kV	0.06	0.062			0.068	0.066	0.064

Busname	Bus kV	Contingency	Criteria	XXX125_off	er_XXX125_on	nr1_XXX125_on	60pct_XXX125_off	60pct_er_XXX125_on	60pct_nr1_XXX125_on
VALENCIA	46	SANJUAN-RIOPUERCO 345 kV	0.06	0.063	0.062		0.068	0.067	0.063
VALENCIA	115	SANJUAN-RIOPUERCO 345 kV	0.06	0.064	0.063		0.069	0.068	0.064
VERANDA	12.5	SANJUAN-RIOPUERCO 345 kV	0.06				0.06		
WARNER	12.5	SANJUAN-RIOPUERCO 345 kV	0.06				0.061		
WINROCK	12.5	SANJUAN-RIOPUERCO 345 kV	0.06				0.062	0.06	
WINROCK	115	SANJUAN-RIOPUERCO 345 kV	0.06				0.06		
ZAMORA	12.5	SANJUAN-RIOPUERCO 345 kV	0.06	0.066	0.063	0.061	0.072	0.07	0.068
ZAMORA	46	SANJUAN-RIOPUERCO 345 kV	0.06	0.062			0.068	0.066	0.064
ZAMORA_T	46	SANJUAN-RIOPUERCO 345 kV	0.06	0.062			0.068	0.066	0.064
ZIA_1	115	SANJUAN-RIOPUERCO 345 kV	0.06				0.06		
ZIA_2	46	SANJUAN-RIOPUERCO 345 kV	0.06	0.061			0.066	0.065	0.062
ZIA_2	115	SANJUAN-RIOPUERCO 345 kV	0.06				0.06		

Post-Contingency Voltage Rises

Busname	Bus kV	Contingency	Criteria	XXX125_off	er_XXX125_on	nr1_XXX125_on	nr2_XXX125_on	60pct_XXX125_off	60pct_er_XXX125_on	60pct_nr1_XXX125_on	60pct_nr2_XXX125_on
MKCOWIND	0.57	FOURCORN-WESTMESA 345 kV	0.05					0.051			
MKCOWIND	0.57	SANJUAN-RIOPUERCO 345 kV	0.05	0.063	0.066	0.055	0.052	0.059	0.061	0.053	0.056
MKCOWIND	34.5	SANJUAN-RIOPUERCO 345 kV	0.05		0.051						