JEA Procedures for Generator

Interconnection to Transmission System (JPGITS)

(Applicable to Generating Facilities connecting to the transmission system)

Effective Date: June 28, 2019

TABLE OF CONTENTS

Page No.

Section 1. Definitions ..... - 1 -

Section 2. Scope and Application ..... - 10 -
2.1 Application of JEA Procedures for Generator Interconnection to Transmission System ..... - 10 -
2.2 Comparability ..... - 10 -
2.3 Base Case Data ..... - 11 -
2.4 No Applicability to Transmission Service ..... - 11 -

Section 3. Interconnection Requests ..... - 11 -
3.1 General ..... - 11 -
3.2 Identification of Types of Interconnection Services ..... - 11 -
3.2.1 Energy Resource Interconnection Service ..... - 12 -
3.2.1.1 The Product ..... - 12 -
3.2.1.2 The Study ..... - 12 -
3.2.2 Network Resource Interconnection Service ..... - 12 -
3.2.2.1 The Product ..... - 13 -
3.2.2.2 The Study ..... - 13 -
3.3 Valid Interconnection Request ..... - 13 -
3.3.1 Initiating an Interconnection Request ..... - 13 -
3.3.2 Acknowledgment of Interconnection Request ..... - 14 -
3.3.3 Deficiencies in Interconnection Request ..... - 14 -
3.3.4 Scoping Meeting ..... - 15 -
3.4 OASIS Posting ..... - 16 -
3.5 Coordination with Affected Systems ..... - 16 -
3.6 Withdrawal ..... - 17 -

Section 4. Queue Position. ..... - 18 -
4.1 General ..... - 18 -
4.2 Clustering ..... - 18 -
4.3 Transferability of Queue Position ..... - 19 -
4.4 Modifications ..... - 19 -

Section 5. Procedures for Interconnection Requests Submitted Prior to Effective Date of Standard Large Generator Interconnection Procedures ..... - 21 -
5.1 Queue Position for Pending Requests ..... - 21 -
5.2 New Transmission Provider ..... - 22 -

Section 6. Interconnection Feasibility Study ..... - 23 -

6.1 Interconnection Feasibility Study Agreement ..... - 23 -
6.2 Scope of Interconnection Feasibility Study ..... - 24 -
6.3 Interconnection Feasibility Study Procedures ..... - 24 -
6.4 Re-Study ..... - 25 -

Section 7. Interconnection System Impact Study ..... - 25 -
7.1 Interconnection System Impact Study Agreement ..... - 25 -
7.2 Execution of Interconnection System Impact Study Agreement ..... - 25 -
7.3 Scope of Interconnection System Impact Study ..... - 26 -
7.4 Interconnection System Impact Study Procedures ..... - 27 -
7.5 Meeting with JEA ..... - 27 -
7.6 Re-Study ..... - 28 -

Section 8. Interconnection Facilities Study ..... - 28 -
8.1 Interconnection Facilities Study Agreement ..... - 28 -
8.2 Scope of Interconnection Facilities Study ..... - 28 -
8.3 Interconnection Facilities Study Procedures ..... - 29 -
8.4 Meeting with JEA ..... - 29 -
8.5 Re-Study ..... - 30 -

Section 9. Engineering & Procurement ('E&P') Agreement ..... - 30 -

Section 10. Optional Interconnection Study ..... - 31 -
10.1 Optional Interconnection Study Agreement ..... - 31 -
10.2 Scope of Optional Interconnection Study ..... - 32 -
10.3 Optional Interconnection Study Procedures ..... - 32 -

Section 11. JEA Agreement for Generator Interconnection to Transmission System (JAGITS) ..... - 32 -
11.1 Tender ..... - 32 -
11.2 Negotiation ..... - 33 -
11.3 Execution and Filing ..... - 33 -
11.4 Commencement of Interconnection Activities ..... - 34 -

Section 12. Construction of JEA's Interconnection Facilities and Network Upgrades ..... - 34 -
12.1 Schedule ..... - 34 -
12.2 Construction Sequencing ..... - 34 -
12.2.1 General ..... - 34 -
12.2.2 Construction of Network Upgrades that are an Obligation of an Entity other than Interconnection Customer ..... - 34 -

12.2.3 Advancing Construction of Network Upgrades that are Part of an Expansion Plan of JEA ..... - 35 -
12.2.4 Amended Interconnection System Impact Study ..... - 35 -

Section 13. Miscellaneous ..... - 35 -
13.1 Confidentiality ..... - 35 -
13.2 Delegation of Responsibility ..... - 36 -
13.3 Obligation for Study Costs ..... - 36 -
13.4 Third Parties Conducting Studies ..... - 36 -
13.5 Disputes ..... - 37 -
13.5.1 Submission ..... - 37 -
13.5.2 Internal Dispute Resolution Procedures ..... - 37 -
13.5.3 External Arbitration Procedures ..... - 37 -
13.5.4 Arbitration Decisions ..... - 37 -
13.5.5 Costs ..... - 37 -
13.6 Local Furnishing Bonds ..... - 39 -
13.6.1 JEA's Own Facilities Financed by Local Furnishing Bonds .... - 39 -
13.6.2 Alternative Procedures for Requesting Interconnection Service ..... - 40 -
13.7 Taxes ..... - 41 -

Appendix 1 – Interconnection Request for Generating Facility Interconnection to Transmission System

Appendix 2 – Interconnection Feasibility Study Agreement

Appendix 3 – Interconnection System Impact Study Agreement

Appendix 4 – Interconnection Facilities Study Agreement

Appendix 5 – Optional Interconnection Study Agreement

Appendix 6 – JEA Agreement for Generator Interconnection to Transmission System (JAGITS) [see separate document]

Section 1. Definitions

Adverse System Impact shall mean the negative effects due to technical or operational limits on conductors or equipment being exceeded that may compromise the safety and reliability of the electric system.

Affected System shall mean an electric system other than JEA's Transmission System that may be affected by the proposed interconnection.

Affected System Operator shall mean the entity that operates an Affected System.

Affiliate shall mean, with respect to a corporation, partnership or other entity, each such other corporation, partnership or other entity that directly or indirectly, through one or more intermediaries, controls, is controlled by, or is under common control with, such corporation, partnership or other entity.

Ancillary Services shall mean those services that are necessary to support the transmission of capacity and energy from resources to loads while maintaining reliable operation of JEA's Transmission System in accordance with Good Utility Practice.

Applicable Laws and Regulations shall mean all duly promulgated applicable federal, state and local laws, regulations, rules, ordinances, codes, decrees, judgments, directives, or judicial or administrative orders, permits and other duly authorized actions of any Governmental Authority.

Applicable Reliability Council shall mean the reliability council applicable to the Transmission System to which the Generating Facility is directly interconnected.

Applicable Reliability Standards shall mean the requirements and guidelines of NERC, the Applicable Reliability Council, and the Control Area of the Transmission System to which the Generating Facility is directly interconnected.

Arbitration Commitment Letter shall mean a letter requesting the submittal of disputed terms and conditions to arbitration as described in Section 13.5.3

Base Case shall mean the base case power flow, short circuit, and stability data bases used for the Interconnection Studies by JEA or Interconnection Customer.

Breach shall mean the failure of a Party to perform or observe any material term or condition of the JEA Agreement for Generator Interconnection to Transmission System.

Breaching Party shall mean a Party that is in Breach of the JEA Agreement for Generator Interconnection to Transmission System.

Business Day shall mean Monday through Friday, excluding Federal Holidays.

Calendar Day shall mean any day including Saturday, Sunday or a Federal Holiday.

Clustering shall mean the process whereby a group of Interconnection Requests is studied together, instead of serially, for the purpose of conducting the Interconnection System Impact Study.

Commercial Operation shall mean the status of a Generating Facility that has commenced generating electricity for sale, excluding electricity generated during Trial Operation.

Commercial Operation Date of a unit shall mean the date on which the Generating Facility commences Commercial Operation as agreed to by the Parties pursuant to Appendix E to the JEA Agreement for Generator Interconnection to Transmission System.

Confidential Information shall mean any confidential, proprietary or trade secret information of a plan, specification, pattern, procedure, design, device, list, concept, policy or compilation relating to the present or planned business of a Party, which is designated as confidential by the Party supplying the information, whether conveyed orally, electronically, in writing, through inspection, or otherwise.

Control Area shall mean an electrical system or systems bounded by interconnection metering and telemetry, capable of controlling generation to maintain its interchange schedule with other Control Areas and contributing to frequency regulation of the interconnection. A Control Area must be certified by an Applicable Reliability Council.

Default shall mean the failure of a Breaching Party to cure its Breach in accordance with Article 17 of the JEA Agreement for Generator Interconnection to Transmission System.

Dispute Resolution shall mean the procedure for resolution of a dispute between the Parties in which they will first attempt to resolve the dispute on an informal basis.

Distribution System shall mean JEA's facilities and equipment used to transmit electricity to ultimate usage points such as homes and industries directly from nearby generators or from interchanges with higher voltage transmission networks which transport bulk power over longer distances. The voltage levels at which distribution systems operate differ among areas.

Distribution Upgrades shall mean the additions, modifications, and upgrades to JEA's Distribution System at or beyond the Point of Interconnection to facilitate interconnection of the Generating Facility and render the transmission service necessary to effect Interconnection Customer's wholesale sale of electricity in interstate commerce. Distribution Upgrades do not include Interconnection Facilities.

Effective Date shall mean the date on which the JEA Agreement for Generator Interconnection to Transmission System becomes effective upon execution by the Parties.

Emergency Condition shall mean a condition or situation: (1) that in the judgment of the Party making the claim is imminently likely to endanger life or property; or (2) that, in the case of JEA, is imminently likely (as determined in a non-discriminatory manner) to cause a material adverse effect on the security of, or damage to JEA's Transmission System, JEA's Interconnection Facilities or the electric systems of others to which JEA's Transmission System is directly connected; or (3) that, in the case of Interconnection Customer, is imminently likely (as determined in a non-discriminatory manner) to cause a material adverse effect on the security of, or damage to, the Generating Facility or Interconnection Customer's Interconnection Facilities. System restoration and black start shall be considered Emergency Conditions; provided that Interconnection Customer is not obligated by the JEA Agreement for Generator Interconnection to Transmission System to possess black start capability.

Energy Resource Interconnection Service shall mean an Interconnection Service that allows the Interconnection Customer to connect its Generating Facility to JEA's Transmission System to be eligible to deliver the Generating Facility's electric output using the existing firm or non-firm capacity of JEA's Transmission System on an as available basis. Energy Resource Interconnection Service in and of itself does not convey transmission service.

Engineering & Procurement (E&P) Agreement shall mean an agreement that authorizes JEA to begin engineering and procurement of long lead-time items necessary for the establishment of the interconnection in order to advance the implementation of the Interconnection Request.

Environmental Law shall mean Applicable Laws or Regulations relating to pollution or protection of the environment or natural resources.

Federal Power Act shall mean the Federal Power Act, as amended, 16 U.S.C. §§ 791a et seq.

FERC shall mean the Federal Energy Regulatory Commission (Commission) or its successor.

Force Majeure shall mean any act of God, labor disturbance, act of the public enemy, war, insurrection, riot, fire, storm or flood, explosion, breakage or accident to machinery or equipment, any order, regulation or restriction imposed by governmental, military or lawfully established civilian authorities, or any other cause beyond a Party's control. A Force Majeure event does not include acts of negligence or intentional wrongdoing by the Party claiming Force Majeure.

Generating Facility shall mean Interconnection Customer's device for the production of electricity identified in the Interconnection Request, but shall not include the Interconnection Customer's Interconnection Facilities.

Generating Facility Capacity shall mean the net capacity of the Generating Facility and the aggregate net capacity of the Generating Facility where it includes multiple energy production devices.

Good Utility Practice shall mean any of the practices, methods and acts engaged in or approved by a significant portion of the electric industry during the relevant time period, or any of the practices, methods and acts which, in the exercise of reasonable judgment in light of the facts known at the time the decision was made, could have been expected to accomplish the desired result at a reasonable cost consistent with good business practices, reliability, safety and expedition. Good Utility Practice is not intended to be limited to the optimum practice, method, or act to the exclusion of all others, but rather to be acceptable practices, methods, or acts generally accepted in the region.

Governmental Authority shall mean any federal, state, local or other governmental regulatory or administrative agency, court, commission, department, board, or other governmental subdivision, legislature, rulemaking board, tribunal, or other governmental authority having jurisdiction over the Parties, their respective facilities, or the respective services they provide, and exercising or entitled to exercise any administrative, executive, police, or taxing authority or power; provided, however, that such term does not include Interconnection Customer, JEA, or any Affiliate thereof.

Hazardous Substances shall mean any chemicals, materials or substances defined as or included in the definition of "hazardous substances," "hazardous wastes,"

"hazardous materials," "hazardous constituents," "restricted hazardous materials," "extremely hazardous substances," "toxic substances," "radioactive substances," "contaminants," "pollutants," "toxic pollutants" or words of similar meaning and regulatory effect under any applicable Environmental Law, or any other chemical, material or substance, exposure to which is prohibited, limited or regulated by any applicable Environmental Law.

Initial Synchronization Date shall mean the date upon which the Generating Facility is initially synchronized and upon which Trial Operation begins.

In-Service Date shall mean the date upon which the Interconnection Customer reasonably expects it will be ready to begin use of JEA's Interconnection Facilities to obtain back feed power.

Interconnection Customer shall mean any entity, including JEA, Transmission Owner or any of the Affiliates or subsidiaries of either, that proposes to interconnect its Generating Facility with JEA's Transmission System.

Interconnection Customer's Interconnection Facilities shall mean all facilities and equipment, as identified in Appendix A of the JEA Agreement for Generator Interconnection to Transmission System, that are located between the Generating Facility and the Point of Change of Ownership, including any modification, addition, or upgrades to such facilities and equipment necessary to physically and electrically interconnect the Generating Facility to JEA's Transmission System. Interconnection Customer's Interconnection Facilities are sole use facilities.

Interconnection Facilities shall mean JEA's Interconnection Facilities and the Interconnection Customer's Interconnection Facilities. Collectively, Interconnection Facilities include all facilities and equipment between the Generating Facility and the Point of Interconnection, including any modification, additions or upgrades that are necessary to physically and electrically interconnect the Generating Facility to JEA's Transmission System. Interconnection Facilities are sole use facilities and shall not include Distribution Upgrades, Stand Alone Network Upgrades or Network Upgrades.

Interconnection Facilities Study shall mean a study conducted by JEA or a third party consultant for the Interconnection Customer to determine a list of facilities (including JEA's Interconnection Facilities and Network Upgrades as identified in the Interconnection System Impact Study), the cost of those facilities, and the time required to interconnect the Generating Facility with JEA's Transmission System. The scope of the study is defined in Section 8 of the JEA Procedures for Generator Interconnection to Transmission System.

Interconnection Facilities Study Agreement shall mean the form of agreement contained in Appendix 4 of the JEA Procedures for Generator Interconnection to Transmission System for conducting the Interconnection Facilities Study.

Interconnection Feasibility Study shall mean a preliminary evaluation of the system impact and cost of interconnecting the Generating Facility to JEA's Transmission System, the scope of which is described in Section 6 of the JEA Procedures for Generator Interconnection to Transmission System.

Interconnection Feasibility Study Agreement shall mean the form of agreement contained in Appendix 2 of the JEA Procedures for Generator Interconnection to Transmission System for conducting the Interconnection Feasibility Study.

Interconnection Request shall mean an Interconnection Customer's request, in the form of Appendix 1 to the JEA Procedures for Generator Interconnection to Transmission System, to interconnect a new Generating Facility, or to increase the capacity of, or make a Material Modification to the operating characteristics of, an existing Generating Facility that is interconnected with JEA's Transmission System.

Interconnection Service shall mean the service provided by JEA associated with interconnecting the Interconnection Customer's Generating Facility to JEA's Transmission System and enabling it to receive electric energy and capacity from the Generating Facility at the Point of Interconnection, pursuant to the terms of the JEA Agreement for Generator Interconnection to Transmission System.

Interconnection Study shall mean any of the following studies: the Interconnection Feasibility Study, the Interconnection System Impact Study, and the Interconnection Facilities Study described in the JEA Procedures for Generator Interconnection to Transmission System.

Interconnection System Impact Study shall mean an engineering study that evaluates the impact of the proposed interconnection on the safety and reliability of JEA's Transmission System and, if applicable, an Affected System. The study shall identify and detail the system impacts that would result if the Generating Facility were interconnected without project modifications or system modifications, focusing on the Adverse System Impacts identified in the Interconnection Feasibility Study, or to study potential impacts, including but not limited to those identified in the Scoping Meeting as described in the JEA Procedures for Generator Interconnection to Transmission System.

Interconnection System Impact Study Agreement shall mean the form of agreement contained in Appendix 3 of the JEA Procedures for Generator Interconnection to Transmission System for conducting the Interconnection System Impact Study.

IRS shall mean the Internal Revenue Service.

JEA shall mean the municipal-owned electric utility (or its designated agent) that owns, controls, or operates generation, transmission or distribution facilities used for the transmission of electricity in interstate commerce and provides transmission service under the Tariff.

JEA Agreement for Generator Interconnection to Transmission System (JAGITS) shall mean the form of interconnection agreement applicable to an Interconnection Request pertaining to a Transmission Interconnected Generating Facility.

JEA Procedures for Generator Interconnection to Transmission System (JPGITS) shall mean the interconnection procedures applicable to an Interconnection Request pertaining to a Transmission Interconnected Generating Facility.

Joint Operating Committee shall be a group made up of representatives from Interconnection Customers and JEA to coordinate operating and technical considerations of Interconnection Service.

Loss shall mean any and all losses relating to injury to or death of any person or damage to property, demand, suits, recoveries, costs and expenses, court costs, attorney fees, and all other obligations by or to third parties, arising out of or resulting from the other Party's performance, or non-performance of its obligations under the JEA Agreement for Generator Interconnection to Transmission System on behalf of the indemnifying Party, except in cases of gross negligence or intentional wrongdoing by the indemnifying Party.

Material Modification shall mean those modifications that have a material impact on the cost or timing of any Interconnection Request with a later queue priority date.

Metering Equipment shall mean all metering equipment installed or to be installed at the Generating Facility pursuant to the JEA Agreement for Generator Interconnection to Transmission System at the metering points, including but not limited to instrument transformers, MWh-meters, data acquisition equipment, transducers, remote terminal unit, communications equipment, phone lines, and fiber optics.

NERC shall mean the North American Electric Reliability Council or its successor organization.

Network Resource shall mean any designated generating resource owned, purchased, or leased by a Network Customer under the Network Integration Transmission

Service Tariff. Network Resources do not include any resource, or any portion thereof, that is committed for sale to third parties or otherwise cannot be called upon to meet the Network Customer's Network Load on a non-interruptible basis.

Network Resource Interconnection Service shall mean an Interconnection Service that allows the Interconnection Customer to integrate its Transmission Interconnected Generating Facility with JEA's Transmission System (1) in a manner comparable to that in which JEA integrates its generating facilities to serve native load customers. Network Resource Interconnection Service in and of itself does not convey transmission service.

Network Upgrades shall mean the additions, modifications, and upgrades to JEA's Transmission System required at or beyond the point at which the Interconnection Facilities connect to JEA's Transmission System to accommodate the interconnection of the Transmission Interconnected Generating Facility to JEA's Transmission System.

Notice of Dispute shall mean a written notice of a dispute or claim that arises out of or in connection with the JEA Agreement for Generator Interconnection to Transmission System or its performance.

Optional Interconnection Study shall mean a sensitivity analysis based on assumptions specified by the Interconnection Customer in the Optional Interconnection Study Agreement.

Optional Interconnection Study Agreement shall mean the form of agreement contained in Appendix 5 of the JEA Procedures for Generator Interconnection to Transmission System for conducting the Optional Interconnection Study.

Party or Parties shall mean JEA, Transmission Owner, Interconnection Customer or any combination of the above.

Point of Change of Ownership shall mean the point, as set forth in Appendix A to the JEA Agreement for Generator Interconnection to Transmission System, where the Interconnection Customer's Interconnection Facilities connect to JEA's Interconnection Facilities.

Point of Interconnection shall mean the point, as set forth in Appendix A to the JEA Agreement for Generator Interconnection to Transmission System, where the Interconnection Facilities connect to JEA's Transmission System.

Queue Position shall mean the order of a valid Interconnection Request, relative to all other pending valid Interconnection Requests, that is established based upon the date and time of receipt of the valid Interconnection Request by JEA.

Reasonable Efforts shall mean, with respect to an action required to be attempted or taken by a Party under the JEA Agreement for Generator Interconnection to Transmission System, efforts that are timely and consistent with Good Utility Practice and are otherwise substantially equivalent to those a Party would use to protect its own interests.

Scoping Meeting shall mean the meeting between representatives of the Interconnection Customer and JEA conducted for the purpose of discussing alternative interconnection options, to exchange information including any transmission data and earlier study evaluations that would be reasonably expected to impact such interconnection options, to analyze such information, and to determine the potential feasible Points of Interconnection.

Site Control shall mean documentation reasonably demonstrating: (1) ownership of, a leasehold interest in, or a right to develop a site for the purpose of constructing the Generating Facility; (2) an option to purchase or acquire a leasehold site for such purpose; or (3) an exclusivity or other business relationship between Interconnection Customer and the entity having the right to sell, lease or grant Interconnection Customer the right to possess or occupy a site for such purpose.

Stand Alone Network Upgrades shall mean Network Upgrades that an Interconnection Customer may construct without affecting day-to-day operations of the Transmission System during their construction. Both JEA and the Interconnection Customer must agree as to what constitutes Stand Alone Network Upgrades and identify them in Appendix A to the JEA Agreement for Generator Interconnection to Transmission System.

System Protection Facilities shall mean the equipment, including necessary protection signal communications equipment, required to protect (1) JEA's Transmission System from faults or other electrical disturbances occurring at the Generating Facility and (2) the Generating Facility from faults or other electrical system disturbances occurring on JEA's Transmission System or on other delivery systems or other generating systems to which JEA's Transmission System is directly connected.

Tariff shall mean JEA's Tariff.

Transmission Interconnected Generating Facility shall mean a Generating Facility interconnecting to the transmission system.

Transmission Owner shall mean an entity that owns, leases or otherwise possesses an interest in the portion of the Transmission System at the Point of Interconnection and may be a Party to the JEA Agreement for Generator Interconnection to Transmission System to the extent necessary.

Transmission Provider shall mean the public utility (or its designated agent) that owns, controls, or operates transmission or distribution facilities used for the transmission of electricity in interstate commerce and provides transmission service under the Tariff. The term Transmission Provider should be read to include the Transmission Owner when the Transmission Owner is separate from JEA.

JEA's Interconnection Facilities shall mean all facilities and equipment owned, controlled, or operated by JEA from the Point of Change of Ownership to the Point of Interconnection as identified in Appendix A to the JEA Agreement for Generator Interconnection to Transmission System, including any modifications, additions or upgrades to such facilities and equipment. JEA's Interconnection Facilities are sole use facilities and shall not include Distribution Upgrades, Stand Alone Network Upgrades or Network Upgrades.

Transmission System shall mean the facilities owned, controlled or operated by JEA or Transmission Owner that are used to provide transmission service.

Trial Operation shall mean the period during which Interconnection Customer is engaged in on-site test operations and commissioning of the Generating Facility prior to Commercial Operation.

Section 2. Scope and Application

2.1 Application of JEA Procedures for Generator Interconnection to Transmission System.

Sections 2 through 13 apply to processing an Interconnection Request pertaining to a Transmission Interconnected Generating Facility.

2.2 Comparability.

JEA shall receive, process and analyze all Interconnection Requests in a timely manner as set forth in this JPGITS. JEA will use the same Reasonable Efforts in processing and analyzing Interconnection Requests from all Interconnection Customers, whether the Generating Facilities are owned by JEA, its subsidiaries or Affiliates or others.

2.3 Base Case Data.

JEA shall provide base power flow, short circuit and stability databases, including all underlying assumptions, and contingency list upon request subject to confidentiality provisions in JPGITS Section 13.1. JEA is permitted to require that Interconnection Customer sign a confidentiality agreement before the release of commercially sensitive information or Critical Energy Infrastructure Information in the Base Case data. Such databases and lists, hereinafter referred to as Base Cases, shall include all (1) generation projects and (ii) transmission projects, including merchant transmission projects that are proposed for the Transmission System for which a transmission expansion plan has been submitted and approved by the applicable authority.

2.4 No Applicability to Transmission Service.

Nothing in this JPGITS shall constitute a request for transmission service or confer upon an Interconnection Customer any right to receive transmission service.

Section 3. Interconnection Requests

3.1 General.

An Interconnection Customer shall submit to JEA an Interconnection Request in the form of Appendix 1 to this JPGITS and a refundable deposit of $10,000 for each request. JEA shall apply each deposit toward the cost of each Interconnection Feasibility Study. Interconnection Customer shall submit a separate Interconnection Request for each site and may submit multiple Interconnection Requests for a single site. Interconnection Customer must submit a deposit with each Interconnection Request even when more than one request is submitted for a single site. An Interconnection Request to evaluate one site at two different voltage levels shall be treated as two Interconnection Requests.

At Interconnection Customer's option, JEA and Interconnection Customer will identify alternative Point(s) of Interconnection and configurations at the Scoping Meeting to evaluate in this process and attempt to eliminate alternatives in a reasonable fashion given resources and information available. Interconnection Customer will select the definitive Point(s) of Interconnection to be studied no later than the execution of the Interconnection Feasibility Study Agreement.

3.2 Identification of Types of Interconnection Services.

At the time the Interconnection Request is submitted, Interconnection Customer must request either Energy Resource Interconnection Service or Network Resource Interconnection Service, as described; provided, however, any Interconnection Customer requesting Network Resource Interconnection Service may also request that it be concurrently studied for Energy Resource Interconnection Service, up to the point when an Interconnection Facility Study Agreement is executed. Interconnection Customer may then elect to proceed with Network Resource Interconnection Service or to proceed under a lower level of interconnection service to the extent that only certain upgrades will be completed.

3.2.1 Energy Resource Interconnection Service.

3.2.1.1 **The Product**. Energy Resource Interconnection Service allows Interconnection Customer to connect the Transmission Interconnected Generating Facility to the Transmission System and be eligible to deliver the Transmission Interconnected Generating Facility's output using the existing firm or non-firm capacity of the Transmission System on an "as available" basis. Energy Resource Interconnection Service does not in and of itself convey any right to deliver electricity to any specific customer or Point of Delivery.

3.2.1.2 **The Study**. The study consists of short circuit/fault duty, steady state (thermal and voltage) and stability analyses. The short circuit/fault duty analysis would identify direct Interconnection Facilities required and the Network Upgrades necessary to address short circuit issues associated with the Interconnection Facilities. The stability and steady state studies would identify necessary upgrades to allow full output of the proposed Transmission Interconnected Generating Facility and would also identify the maximum allowed output, at the time the study is performed, of the interconnecting Transmission Interconnected Generating Facility without requiring additional Network Upgrades.

3.2.2 Network Resource Interconnection Service.

3.2.2.1 **The Product**. JEA must conduct the necessary studies and construct the Network Upgrades needed to integrate the Transmission Interconnected Generating Facility (1) in a manner comparable to that in which JEA integrates its generating facilities to serve native load customers. Network Resource Interconnection Service Allows Interconnection Customer 's Transmission Interconnected Generating Facility to be designated as a Network Resource, up to the Transmission Interconnected Generating Facility's full output, on the same basis as existing Network Resources interconnected to JEA's Transmission System, and to be studied as a Network Resource on the assumption that such a designation will occur.

3.2.2.2 **The Study**. The Interconnection Study for Network Resource Interconnection Service shall assure that Interconnection Customer's Transmission Interconnected Generating Facility meets the requirements for Network Resource Interconnection Service and as a general matter, that such Transmission Interconnected Generating Facility's interconnection is also studied with JEA's Transmission System at both off-peak and peak load, under a variety of severely stressed conditions, to determine whether, with the Transmission Interconnected Generating Facility at full output, the aggregate of generation in the local area can be delivered to the aggregate of load on JEA's Transmission System, consistent with JEA's reliability criteria and procedures. This approach assumes that some portion of existing Network Resources are displaced by the output of Interconnection Customer's Transmission Interconnected Generating Facility. Network Resource Interconnection Service in and of itself does not convey any right to deliver electricity to any specific customer or Point of Delivery.

3.3 Valid Interconnection Request.

3.3.1 Initiating an Interconnection Request.

To initiate an Interconnection Request, Interconnection Customer must submit all of the following:

(i) A $10,000 deposit,

(ii) A completed application in the form of Appendix 1, and

(iii) Demonstration of Site Control or a posting of an additional deposit of $10,000. Such deposits shall be applied toward any Interconnection Studies pursuant to the Interconnection Request. If Interconnection Customer demonstrates Site Control within the cure period specified in Section 3.3.3 after submitting its Interconnection Request, the additional deposit shall be refundable; otherwise, all such deposit(s), additional and initial, become non-refundable.

The expected In-Service Date of the new Transmission Interconnected Generating Facility or increase in capacity of the existing Generating Facility shall be no more than the process window for the regional expansion planning period (or in the absence of a regional planning process, the process window for JEA's expansion planning period) not to exceed seven years from the date the Interconnection Request is received by JEA, unless Interconnection Customer demonstrates that engineering, permitting and construction of the new Transmission Interconnected Generating Facility or increase in capacity of the existing Generating Facility will take longer than the regional expansion planning period. The In-Service Date may succeed the date the Interconnection Request is received by JEA by a period up to ten years, or longer where Interconnection Customer and JEA agree, such agreement not to be unreasonably withheld.

3.3.2 Acknowledgment of Interconnection Request.

JEA shall acknowledge receipt of the Interconnection Request within five (5) Business Days of receipt of the request and attach a copy of the received Interconnection Request to the acknowledgement.

3.3.3 Deficiencies in Interconnection Request.

An Interconnection Request will not be considered to be a valid request until all items in Section 3.3.1 have been received by JEA. If an Interconnection Request fails to meet the requirements set forth in Section 3.3.1, JEA shall notify Interconnection Customer within

five (5) Business Days of receipt of the initial Interconnection Request of the reasons for such failure and that the Interconnection Request does not constitute a valid request. In the event JEA discovers or verifies a deficiency later in the interconnection process, JEA will notify Interconnection Customer as soon as practicable. Interconnection Customer shall provide JEA the additional requested information needed to constitute a valid request within ten (10) Business Days after receipt of such notice. Failure by Interconnection Customer to comply with this Section 3.3.3 shall be treated in accordance with Section 3.6.

3.3.4 Scoping Meeting.

Within ten (10) Business Days after receipt of a valid Interconnection Request, JEA shall establish a date agreeable to Interconnection Customer for the Scoping Meeting, and such date shall be no later than thirty (30) Calendar Days from receipt of the valid Interconnection Request, unless otherwise mutually agreed upon by the Parties.

The purpose of the Scoping Meeting shall be to discuss alternative interconnection options, to exchange information including any transmission data that would reasonably be expected to impact such interconnection options, to analyze such information and to determine the potential feasible Points of Interconnection. JEA and Interconnection Customer will bring to the meeting such technical data, including, but not limited to known:

(i) General facility loadings,
(ii) General instability issues,
(iii) General short circuit issues,
(iv) General voltage issues,
(v) Voltage and frequency ride-through capabilities for the Generating Facility
(vi) General power quality issues including voltage flicker, harmonics
(vii) General reliability issues and
(viii) Diagrams and/or layout of applicable substations as may be reasonably required to accomplish the purpose of the meeting. JEA and Interconnection Customer will also bring to the meeting personnel and other resources as may be reasonably required to accomplish the purpose of the meeting in the time allocated for the meeting. On the basis of the meeting, Interconnection

Customer shall designate its Point of Interconnection, pursuant to Section 6.1, and one or more available alternative Point(s) of Interconnection. The duration of the meeting shall be sufficient to accomplish its purpose.

3.4 OASIS Posting.

JEA will maintain on its OASIS a list of all Interconnection Requests. The list will identify, for each Interconnection Request:

(i) The maximum summer and winter megawatt electrical output;
(ii) The location by county;
(iii) The station or transmission line or lines where the interconnection will be made;
(iv) The projected In-Service Date;
(v) The status of the Interconnection Request, including Queue Position;
(vi) The type of Interconnection Service being requested; and
(vii) The availability of any studies related to the Interconnection Request;
(viii) The date of the Interconnection Request;
(ix) The type of Generating Facility to be constructed including technology and fuel type; and
(x) For Interconnection Requests that have not resulted in a completed interconnection, an explanation as to why it was not completed.

Except in the case of an Affiliate, the list will not disclose the identity of Interconnection Customer until Interconnection Customer executes an JAGITS. Before holding a Scoping Meeting with its Affiliate, JEA shall post on OASIS an advance notice of its intent to do so. JEA shall post to its OASIS site any deviations from the study timelines set forth herein. Interconnection Study reports and Optional Interconnection Study reports shall be posted to JEA's OASIS site subsequent to the meeting between Interconnection Customer and JEA to discuss the applicable study results. JEA shall also post any known deviations in the Generating Facility's In-Service Date.

3.5 Coordination with Affected Systems.

JEA will coordinate the conduct of any studies required to determine the impact of the Interconnection Request on Affected Systems with Affected System Operators and, if possible, include those results (if available) in its

applicable Interconnection Study within the time frame specified in this JPGITS. JEA will include such Affected System Operators in all meetings held with Interconnection Customer as required by this JPGITS. Interconnection Customer will be separately responsible to adhere to the Affected Systems Operator's procedures and costs related to studies and modifications to the Affected System. Interconnection Customer will cooperate with JEA in all matters related to the conduct of studies and the determination of modifications to Affected Systems. A Transmission Provider which may be an Affected System shall cooperate with JEA with whom interconnection has been requested in all matters related to the conduct of studies and the determination of modifications to Affected Systems. JEA may limit Interconnection Service for an Interconnection Request until needed reliability upgrades on an Affected System(s) are complete under separate agreements.

3.6 Withdrawal.

Interconnection Customer may withdraw its Interconnection Request at any time by written notice of such withdrawal to JEA. In addition, if Interconnection Customer fails to adhere to all requirements of this JPGITS, except as provided in Section 13.5 (Disputes), JEA shall deem the Interconnection Request to be withdrawn and shall provide written notice to Interconnection Customer of the deemed withdrawal and an explanation of the reasons for such deemed withdrawal. Upon receipt of such written notice, Interconnection Customer shall have fifteen (15) Business Days in which to either respond with information or actions that cures the deficiency or to notify JEA of its intent to pursue Dispute Resolution.

Withdrawal shall result in the loss of Interconnection Customer's Queue Position. If an Interconnection Customer disputes the withdrawal and loss of its Queue Position, then during Dispute Resolution, Interconnection Customer's Interconnection Request is eliminated from the queue until such time that the outcome of Dispute Resolution would restore its Queue Position. An Interconnection Customer that withdraws or is deemed to have withdrawn its Interconnection Request shall pay to JEA all costs that JEA prudently incurs with respect to that Interconnection Request prior to JEA's receipt of notice described above. Interconnection Customer must pay all monies due to JEA before it is allowed to obtain any Interconnection Study data or results.

JEA shall (i) update the OASIS Queue Position posting and (ii) refund to Interconnection Customer any portion of Interconnection Customer's deposit or study payments that exceeds the costs that JEA has incurred, including interest calculated in accordance with section 35.19a(a)(2) of FERC's regulations. In the event of such withdrawal, JEA, subject to the confidentiality provisions of Section 13.1, shall provide, at Interconnection Customer's request, all information that JEA developed for any completed study conducted up to the date of withdrawal of the Interconnection Request.

Section 4. Queue Position

4.1 General.

JEA shall assign a Queue Position based upon the date and time of receipt of the valid Interconnection Request; provided that, if the sole reason an Interconnection Request is not valid is the lack of required information on the application form, and Interconnection Customer provides such information in accordance with Section 3.3.3, then JEA shall assign Interconnection Customer a Queue Position based on the date the application form was originally filed. Moving a Point of Interconnection shall result in a lowering of Queue Position if it is deemed a Material Modification under Section 4.4.3.

The Queue Position of each Interconnection Request will be used to determine the order of performing the Interconnection Studies and determination of cost responsibility for the facilities necessary to accommodate the Interconnection Request. A higher queued Interconnection Request is one that has been placed "earlier" in the queue in relation to another Interconnection Request that is lower queued. JEA may perform an Interconnection Study out of queue order at any time to the extent warranted by Good Utility Practice based upon the electrical remoteness of the Generating Facility.

JEA may allocate the cost of the common upgrades for clustered Interconnection Requests without regard to Queue Position.

4.2 Clustering.

At JEA's option, Interconnection Requests may be studied serially or in clusters for the purpose of the Interconnection System Impact Study.

Clustering shall be implemented on the basis of electrical proximity of Interconnection Requests without regard to the nature of the underlying Interconnection Service, whether Energy Resource Interconnection Service or Network Resource Interconnection Service. The deadline for completing Interconnection System Impact Study for a cluster shall be in accordance with Section 7.4, for all Interconnection Requests assigned to the same cluster. JEA may study an Interconnection Request separately to the extent warranted by Good Utility Practice based upon the electrical remoteness of the proposed Transmission Interconnected Generating Facility.

Clustering Interconnection System Impact Studies shall be conducted in such a manner to ensure the efficient implementation of the applicable regional transmission expansion plan in light of the Transmission System's capabilities at the time of each study.

4.3 Transferability of Queue Position.

An Interconnection Customer may transfer its Queue Position to another entity only if such entity acquires the specific Generating Facility identified in the Interconnection Request and the Point of Interconnection does not change.

4.4 Modifications.

Interconnection Customer shall submit to JEA, in writing, modifications to any information provided in the Interconnection Request. Interconnection Customer shall retain its Queue Position if the modifications are in accordance with Sections 4.4.1, 4.4.2 or 4.4.5, or are determined not to be Material Modifications pursuant to Section 4.4.3.

Notwithstanding the above, during the course of the Interconnection Studies, either Interconnection Customer or JEA may identify changes to the planned interconnection that may improve the costs and benefits (including reliability) of the interconnection, and the ability of the proposed change to accommodate the Interconnection Request. To the extent the identified changes are acceptable to JEA and Interconnection Customer, such acceptance not to be unreasonably withheld, JEA shall modify the Point of Interconnection and/or configuration in accordance with such changes and proceed with any re-studies necessary to do so in accordance

with Section 6.4, Section 7.6 and Section 8.5 as applicable and Interconnection Customer shall retain its Queue Position.

4.4.1 Prior to the return of the executed Interconnection System Impact Study Agreement to JEA, modifications permitted under this Section shall include specifically:

(a) a decrease of up to 60 percent of electrical output (MW) of the proposed project;

(b) modifying the technical parameters associated with the Transmission Interconnected Generating Facility technology or the Transmission Interconnected Generating Facility step-up transformer impedance characteristics; and

(c) modifying the interconnection configuration. For plant increases, the incremental increase in plant output will go to the end of the queue for the purposes of cost allocation and study analysis.

4.4.2 Prior to the return of the executed Interconnection Facility Study Agreement to JEA, the modifications permitted under this Section shall include specifically:

(a) additional 15 percent decrease of electrical output (MW), and

(b) Transmission Interconnected Generating Facility technical parameters associated with modifications to Transmission Interconnected Generating Facility technology and transformer impedances; provided, however, the incremental costs associated with those modifications are the responsibility of the requesting Interconnection Customer.

4.4.3 Prior to making any modification other than those specifically permitted by Sections 4.4.1, 4.4.2, and 4.4.5, Interconnection Customer may first request that JEA evaluate whether such modification is a Material Modification. In response to Interconnection Customer's request, JEA shall evaluate the proposed modifications prior to making them and inform Interconnection Customer in writing of whether the modifications would constitute a Material Modification. Any change to the Point of Interconnection, except those deemed acceptable under Sections 4.4.1, 6.1, 7.2 or so allowed elsewhere, shall constitute a Material Modification. Interconnection Customer may then withdraw the proposed

modification or proceed with a new Interconnection Request for such modification.

4.4.4 Upon receipt of Interconnection Customer's request for modification permitted under this Section 4.4, JEA shall commence and perform any necessary additional studies as soon as practicable, but in no event shall JEA commence such studies later than thirty (30) Calendar Days after receiving notice of Interconnection Customer's request. Any additional studies resulting from such modification shall be done at Interconnection Customer's cost.

4.4.5 Extensions of less than three (3) cumulative years in the Commercial Operation Date of the Transmission Interconnected Generating Facility to which the Interconnection Request relates are not material and should be handled through construction sequencing.

Section 5. Procedures for Interconnection Requests Submitted Prior to Effective Date of JEA Procedures for Generator Interconnection to Transmission System

5.1 Queue Position for Pending Requests.

5.1.1 Any Interconnection Customer assigned a Queue Position prior to the effective date of this JPGITS shall retain that Queue Position.

5.1.1.1 If an Interconnection Study Agreement has not been executed as of the effective date of this JPGITS, then such Interconnection Study, and any subsequent Interconnection Studies, shall be processed in accordance with this JPGITS.

5.1.1.2 If an Interconnection Study Agreement has been executed prior to the effective date of this JPGITS, such Interconnection Study shall be completed in accordance with the terms of such agreement. With respect to any remaining studies for which an Interconnection Customer has not signed an Interconnection Study Agreement prior to the effective date of the JPGITS, JEA must offer Interconnection Customer the option of either continuing under JEA's existing interconnection study process or going

forward with the completion of the necessary Interconnection Studies (for which it does not have a signed Interconnection Studies Agreement) in accordance with this JPGITS.

5.1.1.3 If a JAGITS has been submitted before the effective date of the JPGITS, then the JAGITS would be grandfathered.

5.1.2 Transition Period.

To the extent necessary, JEA and Interconnection Customers with an outstanding request (i.e., an Interconnection Request for which a JAGITS has not been submitted for approval as of the effective date of this JPGITS) shall transition to this JPGITS within a reasonable period of time not to exceed sixty (60) Calendar Days. The use of the term "outstanding request" herein shall mean any Interconnection Request, on the effective date of this JPGITS:

(i) That has been submitted but not yet accepted by JEA;

(ii) Where the related interconnection agreement has not yet been submitted for approval in executed or unexecuted form,

(iii) Where the relevant Interconnection Study Agreements have not yet been executed, or

(iv) Where any of the relevant Interconnection Studies are in process but not yet completed.

Any Interconnection Customer with an outstanding request as of the effective date of this JPGITS may request a reasonable extension of any deadline, otherwise applicable, if necessary to avoid undue hardship or prejudice to its Interconnection Request. A reasonable extension shall be granted by JEA to the extent consistent with the intent and process provided for under this JPGITS.

5.2 New Transmission Provider.

If JEA transfers control of its Transmission System to a successor Transmission Provider during the period when an Interconnection Request is pending, JEA shall transfer to the successor Transmission Provider any amount of the deposit or payment with interest thereon that exceeds the cost that it incurred to evaluate the request for interconnection. Any difference between such net amount and the deposit or payment required by this JPGITS shall be paid by or refunded to the Interconnection Customer, as appropriate. JEA shall coordinate with the successor Transmission

Provider to complete any Interconnection Study, as appropriate, that JEA has begun but has not completed. If JEA has tendered a draft JAGITS to Interconnection Customer but Interconnection Customer has not executed the JAGITS Agreement, Interconnection Customer must complete negotiations with the successor Transmission Provider.

Section 6. Interconnection Feasibility Study

6.1 Interconnection Feasibility Study Agreement.

Simultaneously with the acknowledgement of a valid Interconnection Request JEA shall provide to Interconnection Customer an Interconnection Feasibility Study Agreement in the form of Appendix 2. The Interconnection Feasibility Study Agreement shall specify that Interconnection Customer is responsible for the actual cost of the Interconnection Feasibility Study. Within five (5) Business Days following the Scoping Meeting Interconnection Customer shall specify for inclusion in the attachment to the Interconnection Feasibility Study Agreement the Point(s) of Interconnection and any reasonable alternative Point(s) of Interconnection. Within five (5) Business Days following JEA's receipt of such designation, JEA shall tender to Interconnection Customer the Interconnection Feasibility Study Agreement signed by JEA, which includes a good faith estimate of the cost for completing the Interconnection Feasibility Study. Interconnection Customer shall execute and deliver to JEA the Interconnection Feasibility Study Agreement along with a $10,000 deposit no later than thirty (30) Calendar Days after its receipt.

On or before the return of the executed Interconnection Feasibility Study Agreement to JEA, Interconnection Customer shall provide the technical data called for in Appendix 1, Attachment A.

If the Interconnection Feasibility Study uncovers any unexpected result(s) not contemplated during the Scoping Meeting, a substitute Point of Interconnection identified by either Interconnection Customer or JEA, and acceptable to the other, such acceptance not to be unreasonably withheld, will be substituted for the designated Point of Interconnection specified above without loss of Queue Position, and Re-studies shall be completed pursuant to Section 6.4 as applicable. For the purpose of this Section 6.1, if JEA and Interconnection Customer cannot agree on the substituted Point of Interconnection, then Interconnection Customer may direct that one of the

alternatives as specified in the Interconnection Feasibility Study Agreement, as specified pursuant to Section 3.3.4, shall be the substitute.

If Interconnection Customer and JEA agree to forgo the Interconnection Feasibility Study, JEA will initiate an Interconnection System Impact Study under Section 7 of this JPGITS and apply the $10,000 deposit towards the Interconnection System Impact Study.

6.2 Scope of Interconnection Feasibility Study.

The Interconnection Feasibility Study shall preliminarily evaluate the feasibility of the proposed interconnection to the Transmission System.

The Interconnection Feasibility Study will consider the Base Case as well as all generating facilities (and with respect to (iii), any identified Network Upgrades) that, on the date the Interconnection Feasibility Study is commenced:

(i) Are directly interconnected to the Transmission System;
(ii) Are interconnected to Affected Systems and may have an impact on the Interconnection Request;
(iii) Have a pending higher queued Interconnection Request to interconnect to the Transmission System; and
(iv) Have no Queue Position but have executed the JAGITS Agreement.

The Interconnection Feasibility Study will consist of a power flow and short circuit analysis, as appropriate. The Interconnection Feasibility Study will provide a list of facilities and a non-binding good faith estimate of cost responsibility and a non-binding good faith estimated time to construct.

6.3 Interconnection Feasibility Study Procedures.

JEA shall utilize existing studies to the extent practicable when it performs the study. JEA shall use Reasonable Efforts to complete the Interconnection Feasibility Study no later than sixty (60) Calendar Days after JEA receives the fully executed Interconnection Feasibility Study Agreement. At the request of Interconnection Customer or at any time JEA determines that it will not meet the required time frame for completing the Interconnection Feasibility Study, JEA shall notify Interconnection Customer as to the schedule status of the Interconnection Feasibility Study. If JEA is unable to complete the Interconnection Feasibility Study within that time period, it shall notify Interconnection Customer and provide an estimated completion date with an explanation of the reasons why additional time is required. Upon request, JEA shall provide Interconnection Customer supporting documentation, work papers and

relevant power flow, short circuit and stability databases for the Interconnection Feasibility Study, subject to confidentiality arrangements consistent with Section 13.1.

6.3.1 Meeting with JEA.

Within ten (10) Business Days of providing an Interconnection Feasibility Study report to Interconnection Customer, JEA and Interconnection Customer shall meet to discuss the results of the Interconnection Feasibility Study.

6.4 Re-Study.

If Re-Study of the Interconnection Feasibility Study is required due to a higher queued project dropping out of the queue, or a modification of a higher queued project subject to Section 4.4, or re-designation of the Point of Interconnection pursuant to Section 6.1 JEA shall notify Interconnection Customer in writing. Such Re-Study shall take not longer than forty-five (45) Calendar Days from the date of the notice. Any cost of Re-Study shall be borne by the Interconnection Customer being re-studied.

Section 7. Interconnection System Impact Study

7.1 Interconnection System Impact Study Agreement.

Unless otherwise agreed, pursuant to the Scoping Meeting provided in Section 3.3.4, simultaneously with the delivery of the Interconnection Feasibility Study to Interconnection Customer, JEA shall provide to Interconnection Customer an Interconnection System Impact Study Agreement in the form of Appendix 3 to this JPGITS. The Interconnection System Impact Study Agreement shall provide that Interconnection Customer shall compensate JEA for the actual cost of the Interconnection System Impact Study. Within three (3) Business Days following the Interconnection Feasibility Study results meeting, JEA shall provide to Interconnection Customer a non-binding good faith estimate of the cost and timeframe for completing the Interconnection System Impact Study.

7.2 Execution of Interconnection System Impact Study Agreement.

Interconnection Customer shall execute the Interconnection System Impact Study Agreement and deliver the executed Interconnection System Impact Study Agreement to JEA no later than thirty (30) Calendar Days after its receipt along with demonstration of Site Control, and a $50,000 deposit.

If Interconnection Customer does not provide all such technical data when it delivers the Interconnection System Impact Study Agreement, JEA shall notify Interconnection Customer of the deficiency within five (5) Business Days of the receipt of the executed Interconnection System Impact Study Agreement and Interconnection Customer shall cure the deficiency within ten (10) Business Days of receipt of the notice, provided, however, such deficiency does not include failure to deliver the executed Interconnection System Impact Study Agreement or deposit.

If the Interconnection System Impact Study uncovers any unexpected result(s) not contemplated during the Scoping Meeting and the Interconnection Feasibility Study, a substitute Point of Interconnection identified by either Interconnection Customer or JEA, and acceptable to the other, such acceptance not to be unreasonably withheld, will be substituted for the designated Point of Interconnection specified above without loss of Queue Position, and restudies shall be completed pursuant to Section 7.6 as applicable. For the purpose of this Section 7.2, if JEA and Interconnection Customer cannot agree on the substituted Point of Interconnection, then Interconnection Customer may direct that one of the alternatives as specified in the Interconnection Feasibility Study Agreement, as specified pursuant to Section 3.3.4, shall be the substitute.

7.3 Scope of Interconnection System Impact Study.

The Interconnection System Impact Study shall evaluate the impact of the proposed interconnection on the reliability of the Transmission System. The Interconnection System Impact Study will consider the Base Case as well as all generating facilities (and with respect to (iii) below, any identified Network Upgrades associated with such higher queued interconnection) that, on the date the Interconnection System Impact Study is commenced:

(i) Are directly interconnected to the Transmission System;

(ii) Are interconnected to Affected Systems and may have an impact on the Interconnection Request;

(iii) Have a pending higher queued Interconnection Request to interconnect to the Transmission System; and

(iv) Have no Queue Position but have executed the JAGITS Agreement.

The Interconnection System Impact Study will consist of a short circuit and protection analysis, a stability analysis, a power flow analysis and other technical analyses as required to adequately determining the reliability or safety concerns associated with the Interconnection Request. The

Interconnection System Impact Study will state the assumptions upon which it is based; state the results of the analyses; and provide the requirements or potential impediments to providing the requested interconnection service, including a preliminary indication of the cost and length of time that would be necessary to correct any problems identified in those analyses and implement the interconnection. The Interconnection System Impact Study will provide a list of facilities that are required as a result of the Interconnection Request and a non-binding good faith estimate of cost responsibility and a non-binding good faith estimated time to construct.

7.4 Interconnection System Impact Study Procedures

JEA shall coordinate the Interconnection System Impact Study with any Affected System that is affected by the Interconnection Request pursuant to Section 3.5 above. JEA shall utilize existing studies to the extent practicable when it performs the study. JEA shall use Reasonable Efforts to complete the Interconnection System Impact Study within one hundred-fifty (150) Calendar Days after the receipt of the Interconnection System Impact Study Agreement or notification to proceed, study payment, and technical data. If JEA uses Clustering, JEA shall use Reasonable Efforts to deliver a completed Interconnection System Impact Study within one hundred-fifty (150) Calendar Days after the close of the Queue Cluster Window.

At the request of Interconnection Customer or at any time JEA determines that it will not meet the required time frame for completing the Interconnection System Impact Study, JEA shall notify Interconnection Customer as to the schedule status of the Interconnection System Impact Study. If JEA is unable to complete the Interconnection System Impact Study within the time period, it shall notify Interconnection Customer and provide an estimated completion date with an explanation of the reasons why additional time is required. Upon request, JEA shall provide Interconnection Customer all supporting documentation, work papers and relevant pre-Interconnection Request and post-Interconnection Request power flow, short circuit and stability databases for the Interconnection System Impact Study, subject to confidentiality arrangements consistent with Section 13.1.

7.5 Meeting with JEA.

Within ten (10) Business Days of providing an Interconnection System Impact Study report to Interconnection Customer, JEA and Interconnection

Customer shall meet to discuss the results of the Interconnection System Impact Study.

7.6 Re-Study.

If Re-Study of the Interconnection System Impact Study is required due to a higher queued project dropping out of the queue, or a modification of a higher queued project subject to Section 4.4, or re-designation of the Point of Interconnection pursuant to Section 7.2 JEA shall notify Interconnection Customer in writing. Such Re-Study shall take no longer than ninety (90) Calendar Days from the date of notice. Any cost of Re-Study shall be borne by the Interconnection Customer being re-studied.

Section 8. Interconnection Facilities Study

8.1 Interconnection Facilities Study Agreement.

Simultaneously with the delivery of the Interconnection System Impact Study to Interconnection Customer, JEA shall provide to Interconnection Customer an Interconnection Facilities Study Agreement in the form of Appendix 4 to this JPGITS. The Interconnection Facilities Study Agreement shall provide that Interconnection Customer shall compensate JEA for the actual cost of the Interconnection Facilities Study. Within three (3) Business Days following the Interconnection System Impact Study results meeting, JEA shall provide to Interconnection Customer a non-binding good faith estimate of the cost and timeframe for completing the Interconnection Facilities Study. Interconnection Customer shall execute the Interconnection Facilities Study Agreement and deliver the executed Interconnection Facilities Study Agreement to JEA within thirty (30) Calendar Days after its receipt, together with the required technical data and the $100,000 deposit.

8.2 Scope of Interconnection Facilities Study.

The Interconnection Facilities Study shall specify and estimate the cost of the equipment, engineering, procurement and construction work needed to implement the conclusions of the Interconnection System Impact Study in accordance with Good Utility Practice to physically and electrically connect the Interconnection Facility to the Transmission System. The Interconnection Facilities Study shall also identify the electrical switching configuration of the connection equipment, including, without limitation: the transformer, switchgear, meters, and other station equipment; the nature and estimated cost of any JEA's Interconnection Facilities and Network

Upgrades necessary to accomplish the interconnection; and an estimate of the time required to complete the construction and installation of such facilities.

8.3 Interconnection Facilities Study Procedures.

JEA shall coordinate the Interconnection Facilities Study with any Affected System pursuant to Section 3.5 above. JEA shall utilize existing studies to the extent practicable in performing the Interconnection Facilities Study. JEA shall use Reasonable Efforts to complete the study and issue a draft Interconnection Facilities Study report to Interconnection Customer within the following number of days after receipt of an executed Interconnection Facilities Study Agreement: one hundred eighty (180) Calendar Days, with no more than a +/- 20 percent cost estimate contained in the report.

At the request of Interconnection Customer or at any time JEA determines that it will not meet the required time frame for completing the Interconnection Facilities Study, JEA shall notify Interconnection Customer as to the schedule status of the Interconnection Facilities Study. If JEA is unable to complete the Interconnection Facilities Study and issue a draft Interconnection Facilities Study report within the time required, it shall notify Interconnection Customer and provide an estimated completion date and an explanation of the reasons why additional time is required.

Interconnection Customer may, within thirty (30) Calendar Days after receipt of the draft report, provide written comments to JEA, which JEA shall include in the final report. JEA shall issue the final Interconnection Facilities Study report within fifteen (15) Business Days of receiving Interconnection Customer's comments or promptly upon receiving Interconnection Customer's statement that it will not provide comments. JEA may reasonably extend such fifteen-day period upon notice to Interconnection Customer if Interconnection Customer's comments require JEA to perform additional analyses or make other significant modifications prior to the issuance of the final Interconnection Facilities Report. Upon request, JEA shall provide Interconnection Customer supporting documentation, work papers, and databases or data developed in the preparation of the Interconnection Facilities Study, subject to confidentiality arrangements consistent with Section 13.1.

8.4 Meeting with JEA.

Within ten (10) Business Days of providing a draft Interconnection Facilities Study report to Interconnection Customer, JEA and

Interconnection Customer shall meet to discuss the results of the Interconnection Facilities Study.

8.5 Re-Study.

If Re-Study of the Interconnection Facilities Study is required due to a higher queued project dropping out of the queue or a modification of a higher queued project pursuant to Section 4.4, JEA shall so notify Interconnection Customer in writing. Such Re-Study shall take no longer than ninety (90) Calendar Days from the date of notice. Any cost of Re-Study shall be borne by the Interconnection Customer being re-studied.

Section 9. Engineering & Procurement ('E&P') Agreement.

Prior to executing a JAGITS, an Interconnection Customer may, in order to advance the implementation of its interconnection, request and JEA shall offer the Interconnection Customer, an E&P Agreement that authorizes JEA to begin engineering and procurement of long lead-time items necessary for the establishment of the interconnection. However, JEA shall not be obligated to offer an E&P Agreement if Interconnection Customer is in Dispute Resolution as a result of an allegation that Interconnection Customer has failed to meet any milestones or comply with any prerequisites specified in other parts of the JPGITS. The E&P Agreement is an optional procedure and it will not alter the Interconnection Customer's Queue Position or In-Service Date. The E&P Agreement shall provide for Interconnection Customer to pay the cost of all activities authorized by Interconnection Customer and to make advance payments or provide other satisfactory security for such costs.

Interconnection Customer shall pay the cost of such authorized activities and any cancellation costs for equipment that is already ordered for its interconnection, which cannot be mitigated as hereafter described, whether or not such items or equipment later become unnecessary. If Interconnection Customer withdraws its application for interconnection or either Party terminates the E&P Agreement, to the extent the equipment ordered can be canceled under reasonable terms, Interconnection Customer shall be obligated to pay the associated cancellation costs. To the extent that the equipment cannot be reasonably canceled, JEA may elect:

(i) To take title to the equipment, in which event JEA shall refund Interconnection Customer any amounts paid by Interconnection Customer for such equipment and shall pay the cost of delivery of such equipment, or

(ii) To transfer title to and deliver such equipment to Interconnection Customer, in which event Interconnection Customer shall pay any unpaid balance and cost of delivery of such equipment.

Section 10. Optional Interconnection Study

10.1 Optional Interconnection Study Agreement.

On or after the date when Interconnection Customer receives Interconnection System Impact Study results, Interconnection Customer may request, and JEA shall perform a reasonable number of Optional Studies. The request shall describe the assumptions that Interconnection Customer wishes JEA to study within the scope described in Section 10.2. Within five (5) Business Days after receipt of a request for an Optional Interconnection Study, JEA shall provide to Interconnection Customer an Optional Interconnection Study Agreement in the form of Appendix 5.

The Optional Interconnection Study Agreement shall:

(i) Specify the technical data that Interconnection Customer must provide for each phase of the Optional Interconnection Study,

(ii) Specify Interconnection Customer's assumptions as to which Interconnection Requests with earlier queue priority dates will be excluded from the Optional Interconnection Study case and assumptions as to the type of interconnection service for Interconnection Requests remaining in the Optional Interconnection Study case, and

(iii) JEA's estimate of the cost of the Optional Interconnection Study. The estimate shall not include any costs expected to be incurred by any Affected System whose participation is necessary to complete the Optional Interconnection Study.

Notwithstanding the above, JEA shall not be required as a result of an Optional Interconnection Study request to conduct any additional Interconnection Studies with respect to any other Interconnection Request.

Interconnection Customer shall execute the Optional Interconnection Study Agreement within ten (10) Business Days of receipt and deliver the Optional Interconnection Study Agreement, the technical data and a $10,000 deposit to JEA.

10.2 Scope of Optional Interconnection Study.

The Optional Interconnection Study will consist of a sensitivity analysis based on the assumptions specified by Interconnection Customer in the Optional Interconnection Study Agreement. The Optional Interconnection Study will also identify JEA's Interconnection Facilities and the Network Upgrades, and the estimated cost thereof, that may be required to provide Interconnection Service based upon the results of the Optional Interconnection Study. The Optional Interconnection Study shall be performed solely for informational purposes. JEA shall use Reasonable Efforts to coordinate the study with any Affected Systems that may be affected by the types of Interconnection Services that are being studied. JEA shall utilize existing studies to the extent practicable in conducting the Optional Interconnection Study.

10.3 Optional Interconnection Study Procedures.

The executed Optional Interconnection Study Agreement, the prepayment, and technical and other data called for therein must be provided to JEA within ten (10) Business Days of Interconnection Customer receipt of the Optional Interconnection Study Agreement. JEA shall use Reasonable Efforts to complete the Optional Interconnection Study within a mutually agreed upon time period specified within the Optional Interconnection Study Agreement. If JEA is unable to complete the Optional Interconnection Study within such time period, it shall notify Interconnection Customer and provide an estimated completion date and an explanation of the reasons why additional time is required. Any difference between the study deposit and the actual cost of the study shall be paid to JEA or refunded to Interconnection Customer, as appropriate. Upon request, JEA shall provide Interconnection Customer supporting documentation and work papers and databases or data developed in the preparation of the Optional Interconnection Study, subject to confidentiality arrangements consistent with Section 13.1.

Section 11. JEA Agreement for Generator Interconnection to Transmission System (JAGITS)

11.1 Tender.

Interconnection Customer shall tender comments on the draft Interconnection Facilities Study Report within thirty (30) Calendar Days of receipt of the report. Within thirty (30) Calendar Days after the comments are submitted, JEA shall tender a draft JAGITS, together with draft appendices completed to the extent practicable. The draft JAGITS shall be

in the form of JEA's standard form JAGITS, which is in Appendix 6. Interconnection Customer shall execute and return the completed draft appendices within thirty (30) Calendar Days.

11.2 Negotiation.

Notwithstanding Section 11.1, at the request of Interconnection Customer JEA shall begin negotiations with Interconnection Customer concerning the appendices to the JAGITS at any time after Interconnection Customer executes the Interconnection Facilities Study Agreement. JEA and Interconnection Customer shall negotiate concerning any disputed provisions of the appendices to the draft JAGITS after tender of the final Interconnection Facilities Study Report. If Interconnection Customer determines that negotiations are at an impasse, it may request termination of the negotiations at any time after tender of the draft JAGITS pursuant to Section 11.1 or initiate Dispute Resolution procedures pursuant to Section 13.5. If Interconnection Customer requests termination of the negotiations, but within sixty (60) Calendar Days thereafter fails to initiate Dispute Resolution, it shall be deemed to have withdrawn its Interconnection Request. Unless otherwise agreed by the Parties, if Interconnection Customer has not initiated Dispute Resolution procedures pursuant to Section 13.5 within sixty (60) Calendar Days of tender of draft JAGITS, it shall be deemed to have withdrawn its Interconnection Request. JEA shall provide to Interconnection Customer a final JAGITS within fifteen (15) Business Days after the completion of the negotiation process.

11.3 Execution.

Within fifteen (15) Business Days after receipt of the final JAGITS, Interconnection Customer shall provide JEA

(A) Reasonable evidence that continued Site Control or

(B) Posting of $250,000, non-refundable additional security, which shall be applied toward future construction costs.

At the same time, Interconnection Customer also shall provide reasonable evidence that one or more of the following milestones in the development of the Transmission Interconnected Generating Facility, at Interconnection Customer election, has been achieved:

(i) The execution of a contract for the supply or transportation of fuel to the Transmission Interconnected Generating Facility;

(ii) The execution of a contract for the supply of cooling water to the Transmission Interconnected Generating Facility;

(iii) Execution of a contract for the engineering for, procurement of major equipment for, or construction of, the Transmission Interconnected Generating Facility;
(iv) Execution of a contract for the sale of electric energy or capacity from the Transmission Interconnected Generating Facility; or
(v) Application for an air, water, or land use permit.

Interconnection Customer shall execute two originals of the tendered JAGITS and return them to JEA as soon as practicable, but not later than ten (10) Business Days after receiving the two executed originals of the tendered JAGITS. .

11.4 Commencement of Interconnection Activities.
If Interconnection Customer executes the final JAGITS, JEA and Interconnection Customer shall perform their respective obligations in accordance with the terms of the JAGITS.

Section 12. Construction of JEA's Interconnection Facilities and Network Upgrades

12.1 Schedule.
JEA and Interconnection Customer shall negotiate in good faith concerning a schedule for the construction of JEA's Interconnection Facilities and the Network Upgrades.

12.2 Construction Sequencing.

12.2.1 General.
In general, the In-Service Date of an Interconnection Customers seeking interconnection to the Transmission System will determine the sequence of construction of Network Upgrades.

12.2.2 Construction of Network Upgrades that are an Obligation of an Entity other than Interconnection Customer or JEA.
An Interconnection Customer with a executed JAGITS, in order to maintain its In-Service Date, shall be solely responsible with coordinating and funding all necessary non-JEA Network Upgrades belonging to any Affected Parties, if required. JEA shall provide the contact information between

the Interconnection Customer and the Affected Parties in order to facilitate their coordination.

12.2.3 Advancing Construction of JEA Network Upgrades that are Part of an Expansion Plan of JEA.

An Interconnection Customer with a JAGITS, in order to maintain its In-Service Date, may request that JEA advance to the extent necessary the completion of Network Upgrades that:

(i) Are necessary to support such In-Service Date and

(ii) Would otherwise not be completed, pursuant to an expansion plan of JEA, in time to support such In-Service Date. Upon such request, JEA will use Reasonable Efforts to advance the construction of such JEA Network Upgrades to accommodate such request; provided that Interconnection Customer commits to pay JEA any associated expediting costs.

12.2.4 Amended Interconnection System Impact Study.

An Interconnection System Impact Study will be amended to determine the facilities necessary to support the requested In-Service Date. This amended study will include those transmission and Transmission Interconnected Generating Facilities that are expected to be in service on or before the requested In-Service Date.

Section 13. Miscellaneous

13.1 Confidentiality.

The parties acknowledge that JEA is a body politic and corporate that is subject to Chapter 119, Florida Statutes, and related statutes known as the "Public Records Laws" and that this Agreement is a public record as defined therein. If a request is made to view information Interconnection Customer has clearly segregated and marked as “Confidential” (“Confidential Information”), JEA will notify Interconnection Customer of such request and the date that such records will be released to the requester unless Interconnection Customer obtains a court order enjoining such disclosure. If Interconnection Customer fails to obtain that court order enjoining disclosure, JEA will release the requested information on the date specified. Such release shall be deemed to be made with Interconnection Customer's consent and will not be deemed to be a violation of law,

including but not limited to laws concerning trade secrets, copyright or other intellectual property. In the event Interconnection Customer breaches this Agreement, then Interconnection Customer hereby grants JEA a limited license to use the Confidential Information in any reasonable way in order to mitigate JEA's damages.

13.2 Delegation of Responsibility.

JEA may use the services of subcontractors as it deems appropriate to perform its obligations under this JPGITS. JEA shall remain primarily liable to Interconnection Customer for the performance of such subcontractors and compliance with its obligations of this JPGITS. The subcontractor shall keep all information provided confidential and shall use such information solely for the performance of such obligation for which it was provided and no other purpose.

13.3 Obligation for Study Costs.

JEA shall charge and Interconnection Customer shall pay the actual costs of the Interconnection Studies. Any difference between the study deposit and the actual cost of the applicable Interconnection Study shall be paid by or refunded, except as otherwise provided herein, to Interconnection Customer or offset against the cost of any future Interconnection Studies associated with the applicable Interconnection Request prior to beginning of any such future Interconnection Studies. Any invoices for Interconnection Studies shall include a detailed and itemized accounting of the cost of each Interconnection Study. Interconnection Customer shall pay any such undisputed costs within thirty (30) Calendar Days of receipt of an invoice therefor. JEA shall not be obligated to perform or continue to perform any studies unless Interconnection Customer has paid all undisputed amounts in compliance herewith.

13.4 Third Parties Conducting Studies.

If

(i) At the time of the signing of an Interconnection Study Agreement there is disagreement as to the estimated time to complete an Interconnection Study,

(ii) Interconnection Customer receives notice pursuant to Sections 6.3, 7.4 or 8.3 that JEA will not complete an Interconnection Study within the applicable timeframe for such Interconnection Study, or

(iii) Interconnection Customer receives neither the Interconnection Study nor a notice under Sections 6.3, 7.4 or

8.3 within the applicable timeframe for such Interconnection Study, then Interconnection Customer may require JEA to utilize a third party consultant reasonably acceptable to Interconnection Customer and JEA to perform such Interconnection Study under the direction of JEA. At other times, JEA may also utilize a third party consultant to perform such Interconnection Study, either in response to a general request of Interconnection Customer, or on its own volition.

In all cases, use of a third party consultant shall be in accord with Article 26 of the JAGITS (Subcontractors) and limited to situations where JEA determines that doing so will help maintain or accelerate the study process for Interconnection Customer's pending Interconnection Request and not interfere with JEA's progress on Interconnection Studies for other pending Interconnection Requests. In cases where Interconnection Customer requests use of a third party consultant to perform such Interconnection Study, Interconnection Customer and JEA shall negotiate all of the pertinent terms and conditions, including reimbursement arrangements and the estimated study completion date and study review deadline. JEA shall convey all work papers, data bases, study results and all other supporting documentation prepared to date with respect to the Interconnection Request as soon as soon as practicable upon Interconnection Customer's request subject to the confidentiality provision in Section 13.1. In any case, such third party contract may be entered into with either Interconnection Customer or JEA at JEA's discretion. In the case of (iii) Interconnection Customer maintains its right to submit a claim to Dispute Resolution to recover the costs of such third party study. Such third party consultant shall be required to comply with this JPGITS, Article 26 of the JAGITS (Subcontractors), and the relevant procedures and protocols as would apply if JEA were to conduct the Interconnection Study and shall use the information provided to it solely for purposes of performing such services and for no other purposes. JEA shall cooperate with such third party consultant and Interconnection Customer to complete and issue the Interconnection Study in the shortest reasonable time.

13.5 Disputes.

13.5.1 Submission.

In the event either Party has a dispute, or asserts a claim, that arises out of or in connection with the JAGITS, the JPGITS, or their performance, such Party (the "disputing Party") shall

provide the other Party with written notice of the dispute or claim ("Notice of Dispute"). Such dispute or claim shall be referred to a designated senior representative of each Party for resolution on an informal basis as promptly as practicable after receipt of the Notice of Dispute by the other Party. In the event the Parties do not reach final agreement, each Party may exercise whatever rights and remedies it may have in equity or at law consistent with the terms of this JAGITS.

13.5.2 Internal Dispute Resolution Procedures.
Any dispute between an Interconnection Customer and JEA involving a Transmission Interconnected Generating Facility under this document shall be referred to a designated senior representative of JEA and a senior representative of the Interconnection Customer for resolution on an informal basis as promptly as practicable. In the event the designated representatives are unable to resolve the dispute within thirty (30) days [or such other period as the Parties may agree upon] by mutual agreement, such dispute shall be submitted to arbitration and resolved in accordance with the arbitration procedures set forth below.

13.5.3 External Arbitration Procedures.
Disputes may be submitted to arbitration upon request from the Interconnection Customer in the form of an Arbitration Commitment Letter and provision of the required letter of creditor other form of security. Any arbitration initiated under this Section 13 shall be conducted before a single neutral arbitrator appointed by the Parties. If the Parties fail to agree upon a single arbitrator within ten (10) days of the referral of the dispute to arbitration, each Party shall choose one arbitrator who shall sit on a three-member arbitration panel. The two arbitrators so chosen shall within twenty (20) days select a third arbitrator to chair the arbitration panel. In either case, the arbitrators shall be knowledgeable in electric utility matters, including electric transmission and bulk power issues, and shall not have any current or past substantial business or financial relationships with any Party to the arbitration (other than previous arbitration experience). The arbitrator(s) shall provide each of the Parties an opportunity to be heard and, except as otherwise provided herein, shall generally conduct the arbitration in accordance with the

Commercial Arbitration Rules of the American Arbitration Association and any applicable Regional Transmission Group rules.

13.5.4 Arbitration Decisions.

Unless otherwise agreed, the arbitrator(s) shall render a decision to disputes under this Section 13 within ninety (90) days of appointment and shall notify the Parties in writing of such decision and the reasons therefore. The arbitrator(s) shall be authorized only to interpret and apply the provisions of this document, Tariff, and any Service Agreement entered into under this document and shall have no power to modify or change any of the above in any manner. The decision of the arbitrator(s) shall be final and binding upon the Parties, and judgment on the award may be entered in any court governed by the rules of the State of Florida.

13.5.5 Costs.

Each Party shall be responsible for its own costs incurred during the arbitration process and for the following costs, if applicable:

1. the cost of the arbitrator chosen by the Party to sit on the three member panel and one half of the cost of the third arbitrator chosen; or

2. one half the cost of the single arbitrator jointly chosen by the Parties.

13.6 Local Furnishing Bonds.

13.6.1 JEA's Own Facilities Financed by Local Furnishing Bonds.

This provision is applicable only to JEA that has financed facilities with tax-exempt bonds under section 103 of the Internal Revenue Code ("tax-exempt bonds "). Notwithstanding any other provision of this JAGITS and JPGITS, JEA shall not be required to provide Interconnection Service to Interconnection Customer pursuant to this JAGITS and JPGITS if the provision of such Transmission Service would jeopardize the tax-exempt status of any tax-exempt

bonds used to finance JEA's facilities that would be used in providing such Interconnection Service.

13.6.2 Alternative Procedures for Requesting Interconnection Service.

If JEA determines that the provision of Interconnection Service requested by Interconnection Customer would jeopardize the tax-exempt status of any of its bonds used to finance its facilities that would be used in providing such Interconnection Service, it shall advise the Interconnection Customer within thirty (30) Calendar Days of receipt of the Interconnection Request.

13.7 Taxes

Nothing in this Agreement shall be construed to affect the tax status of a JEA as a municipal entity under applicable tax law and regulations. Interconnection Customer shall cooperate with JEA and take all actions as may be recommended so as not to adversely affect JEA's tax exempt status.

APPENDIX 1 to JPGITS
INTERCONNECTION REQUEST FOR A
TRANSMISSION INTERCONNECTED GENERATING FACILITY

1. The undersigned Interconnection Customer submits this request to interconnect its Transmission Interconnected Generating Facility with JEA's Transmission System.

2. This Interconnection Request is for (check one):
   _____ A proposed new Transmission Interconnected Generating Facility.
   _____ An increase in the generating capacity or a Material Modification of an existing Generating Facility.

3. The type of interconnection service requested (check one):
   _____ Energy Resource Interconnection Service
   _____ Network Resource Interconnection Service

4. _____ Check here only if Interconnection Customer requesting Network Resource Interconnection Service also seeks to have its Generating Facility studied for Energy Resource Interconnection Service

5. Interconnection Customer provides the following information:

   a. Address or location or the proposed new Transmission Interconnected Generating Facility site (to the extent known) or, in the case of an existing Generating Facility, the name and specific location of the existing Generating Facility;

   b. Maximum summer at ____ degrees C and winter at _____ degrees C megawatt electrical output of the proposed new Transmission Interconnected Generating Facility or the amount of megawatt increase in the generating capacity of an existing Generating Facility;

   c. General description of the equipment configuration;

   d. Commercial Operation Date, synchronization date, and required Interconnection Facilities In-Service Date (Day, Month, and Year);

   e. Name, address, telephone number, and e-mail address of Interconnection Customer's contact person;

f. Approximate location of the proposed Point of Interconnection including township and zip code (optional); and

g. Interconnection Customer Data (set forth in Attachment A)

h. Primary frequency response operating range for electric storage resources.

6. Applicable deposit amount as specified in the JPGITS.

7. Evidence of Site Control as specified in the JPGITS (check one)
____ Is attached to this Interconnection Request
____ Will be provided at a later date in accordance with this JPGITS

8. This Interconnection Request shall be submitted to the representative indicated below:

JEA
Attn: Manager, Electric T&D Planning
21 West Church St
Jacksonville, FL 32202

9. Representative of Interconnection Customer to contact:
[To be completed by Interconnection Customer]

10. This Interconnection Request is submitted by:

Name of Interconnection Customer: _____

By (signature): _____

Name (type or print): _____

Title: _____

Date: _____

TRANSMISSION INTERCONNECTED GENERATING FACILITY DATA

UNIT RATINGS

kVA _____ °F _____ Voltage _____
Power Factor _____
Speed (RPM) _____ Connection (e.g. Wye) _____
Short Circuit Ratio _____ Frequency, Hertz _____
Stator Amperes at Rated kVA _____ Field Volts _____
Max Turbine MW _____°F _____

Primary frequency response operating range for electric storage resources:
Minimum State of Charge:_____
Maximum State of Charge:_____

COMBINED TURBINE-GENERATOR-EXCITER INERTIA DATA

Inertia Constant, H = _____ kW sec/kVA
Moment-of-Inertia, WR^2 = _____ lb. $ft.^2$

REACTANCE DATA (PER UNIT-RATED KVA)

	DIRECT AXIS		QUADRATURE AXIS	
Synchronous – saturated	X_{dv}	_____	X_{qv}	_____
Synchronous – unsaturated	X_{di}	_____	X_{qi}	_____
Transient – saturated	X'_{dv}	_____	X'_{qv}	_____
Transient – unsaturated	X'_{di}	_____	X'_{qi}	_____
Subtransient – saturated	X''_{dv}	_____	X''_{qv}	_____
Subtransient – unsaturated	X''_{di}	_____	X''_{qi}	_____
Negative Sequence – saturated	$X2_v$	_____		
Negative Sequence – unsaturated	$X2_i$	_____		
Zero Sequence – saturated	$X0_v$	_____		
Zero Sequence – unsaturated	$X0_i$	_____		
Leakage Reactance	Xl_m	_____		

FIELD TIME CONSTANT DATA (SEC)

Open Circuit	T'_{do}	_____	T'_{qo}	_____
Three-Phase Short Circuit Transient	T'_{d3}	_____	T'_{q}	_____
Line to Line Short Circuit Transient	T'_{d2}	_____		
Line to Neutral Short Circuit Transient	T'_{d1}	_____		
Short Circuit Subtransient	T''_{d}	_____	T''_{q}	_____
Open Circuit Subtransient	T''_{do}	_____	T''_{qo}	_____

ARMATURE TIME CONSTANT DATA (SEC)

Three Phase Short Circuit	T_{a3}	_____
Line to Line Short Circuit	T_{a2}	_____
Line to Neutral Short Circuit	T_{a1}	_____

NOTE: If requested information is not applicable, indicate by marking "N/A."

MW CAPABILITY AND PLANT CONFIGURATION
TRANSMISSION INTERCONNECTED GENERATING FACILITY DATA

ARMATURE WINDING RESISTANCE DATA (PER UNIT)

Positive	R_1	_____
Negative	R_2	_____
Zero	R_0	_____

Rotor Short Time Thermal Capacity I_2^2t = _____
Field Current at Rated kVA, Armature Voltage and PF = _____ amps
Field Current at Rated kVA and Armature Voltage, 0 PF = _____ amps
Three Phase Armature Winding Capacitance = _____ microfarad
Field Winding Resistance = _____ ohms _____ °C
Armature Winding Resistance (Per Phase) = _____ ohms _____ °C

CURVES

Provide Saturation, Vee, Reactive Capability, Capacity Temperature Correction curves. Designate normal and emergency Hydrogen Pressure operating range for multiple curves.

Provide Power Quality curves if available specifying percent total harmonic distortion vertically and percent power output horizontally from 25 – 100% power output for both current and voltages or specify that the unit is IEEE 519 compliant.

GENERATOR STEP-UP TRANSFORMER DATA RATINGS

Capacity Self-cooled/Maximum Nameplate
_____/_____kVA

Voltage Ratio (Generator Side/System side/Tertiary)
_____/_____/_____kV

Winding Connections (Low V/High V/Tertiary V (Delta or Wye))
_____/_____/_____

Fixed Taps Available _____

Present Tap Setting _____

IMPEDANCE

Positive Z_1 (on self-cooled kVA rating)_____ % _____ X/R

Zero Z_0 (on self-cooled kVA rating)_____ % _____ X/R

EXCITATION SYSTEM DATA

Identify appropriate IEEE or PTI model block diagram of excitation system and power system stabilizer (PSS) for computer representation in power system stability simulations and the corresponding excitation system and PSS constants for use in the model.

GOVERNOR SYSTEM DATA

Identify appropriate IEEE or PTI model block diagram of governor system for computer representation in power system stability simulations and the corresponding governor system constants for use in the model.

OTHER SPECIAL EQUIPMENT

Identify any required or planned special equipment and/or diagrams required for this installation including, any Flexible AC Transmission (FACTs) devices such as static VAR compensators or Remedial Action Schemes (RAS's).

WIND GENERATORS

Number of generators to be interconnected pursuant to this Interconnection Request:
_____

Elevation: _____ _____ Single Phase _____ Three Phase

Inverter manufacturer, model name, number, and version:
_____

List of adjustable setpoints for the protective equipment or software:
_____
Type of wind generator including a generic description, e.g., GE doubly fed induction machine with back-to-back IGBT converters, or Micon induction generator):

Specify wind generator voltage ride through capability:
Minimum low voltage threshold in percent to enable tripping Minimum low voltage duration in seconds to enable tripping

Provide voltage flicker data, if available, for the wind generator model to be installed specified in percent of total voltage output. The data may be provided at 25, 50, 75, and 100% of output or in

the form of a curve with the Y-axis showing percent of flicker versus total output and the X-axis showing percent load output from at least 25% to 100% of total output.

Note: A completed power system load flow and dynamic data in IEEE or PTI format must be supplied with the Interconnection Request. If other data sheets provide additional information for consideration in the Interconnection Request, then they shall be provided and discussed at the Scoping Meeting. Interconnection Customer generator consisting of many small units shall be required to provide equivalent models of their Generating Facility at the Point of Interconnection with JEA.

INDUCTION GENERATORS

(*) Field Volts: _____
(*) Field Amperes: _____
(*) Motoring Power (kW): _____
(*) Neutral Grounding Resistor (If Applicable): _____
(*) I_2^2t or K (Heating Time Constant): _____
(*) Rotor Resistance: _____
(*) Stator Resistance: _____
(*) Stator Reactance: _____
(*) Rotor Reactance: _____
(*) Magnetizing Reactance: _____
(*) Short Circuit Reactance: _____
(*) Exciting Current: _____
(*) Temperature Rise: _____
(*) Frame Size: _____
(*) Design Letter: _____
(*) Reactive Power Required In Vars (No Load): _____
(*) Reactive Power Required In Vars (Full Load): _____
(*) Total Rotating Inertia, H: _____Per Unit on KVA Base

Note: Please consult JEA prior to submitting the Interconnection Request to determine if the information designated by (*) is required.

Attachment B to Appendix 1
Interconnection Request

Required Solar Generating Facility Information

Generating Facility Name: _____

Maximum Net Export Capability (at POI): _____MW (Gross Generation – Station Service)
Gross Generator Capability (at Inverter Terminals): _____MW
Station Service Load (including losses): _____MW

1. Simplified One-Line Diagram. This should be similar to Figure below. If it is different, please mark the difference on the diagram below.

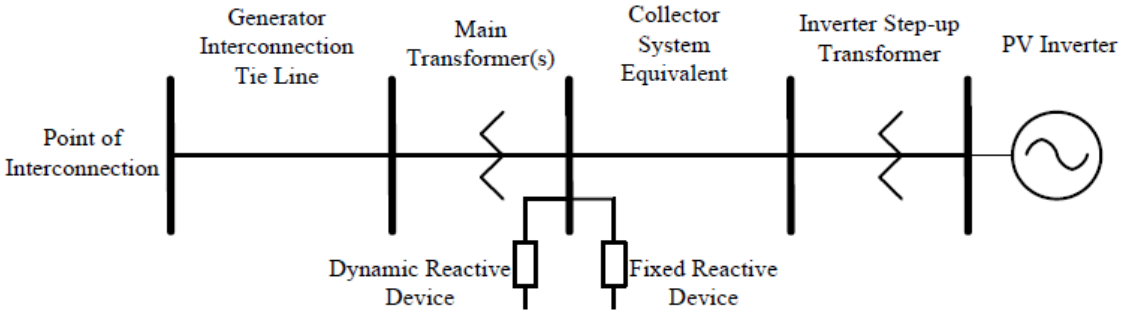

2. Generator Interconnection Tie Line.
a) Point of Interconnection (substation/line name): _____

b) Line voltage: _____kV, line rating at 95 degree F ambient: _____MVA, line length: _____Miles/Feet

c) R_1 = _____ohm or _____ pu on 100 MVA and line kV base (positive sequence)

d) X_1 = _____ohm or _____ pu on 100 MVA and line kV base (positive sequence)

e) B_1 = _____ µF or _____ pu on 100 MVA and line kV base (positive sequence)

f) R_0 = _____ ohm or _____ pu on 100 MVA and line kV base (zero sequence)

g) X_0 = _____ ohm or _____ pu on 100 MVA and line kV base (zero sequence)

h) B_0 = _____ µF or _____ pu on 100 MVA and line kV base (zero sequence)

3. Main Transformer. Number of main transformers: _____

Two-Winding Main Transformer Data (as applicable):

a) Rating (OA/FA/FA): _____/_____ /_____ MVA

b) Nominal Voltage for each winding (Low/High): _____/ _____kV

c) Winding Connections (Low/High): Delta or Wye / Delta or Wye

d) Available tap positions: ___/___ /___ /___ /___ kV **or** ____%____ # of taps.

e) Positive sequence impedance Z_1: _____%, _____X/R on self-cooled (OA) MVA rating above.

f) Zero sequence impedance Z_0: _____ %, _____ X/R on self-cooled (OA) MVA rating above.

g) For padmount transformer, construction: 3 / 4 / 5 -legged

Three-Winding Main Transformer Data (as applicable)

h) GSU connection and winding (please attach diagram and mark to reference this form).

	H Winding Data	**X Winding Data**	**Y Winding Data**
Full load ratings (i.e. OA/FA/FA)	_____/_____/_____ MVA	_____/_____/_____ MVA	_____/_____/_____ MVA
Rated high side voltage base	_____ kV Delta or Wye connected	_____ kV Delta or Wye connected	_____ kV Delta or Wye connected
Tap positions available	_____/ _____/ _____/ _____/ _____ kV	_____/ _____/ _____/ _____/ _____ kV	_____/ _____/ _____/ _____/ _____ kV
Present Tap Setting (if applicable)	_____ kV	_____ kV	_____ kV
Neutral solidly grounded? (or) Neutral Grounding Resistor (if applicable)	_____ _____ Ohms	_____ _____ Ohms	_____ _____ Ohms
BIL rating	_____ kV	_____ kV	_____ kV

Three-Winding Main Transformer Impedance Data (as applicable)

	H-X Winding Data	H-Y Winding Data	X-Y Winding Data
Transformer base for impedances provided	_____ MVA	_____ MVA	_____ MVA
Positive sequence impedance Z_1	_____ % _____ X/R	_____ % _____ X/R	_____ % _____ X/R
Zero sequence impedance Z_0	_____ % _____ X/R	_____ % _____ X/R	_____ % _____ X/R

4. Collector System Equivalent Model.

a) Collector system voltage = _____kV

b) Collector system equivalent model rating at 95 degree F ambient = _____MVA

c) R_1 = _____ ohm or _____ pu on 100 MVA and collector kV base (positive sequence)

d) X_1 = _____ ohm or _____ pu on 100 MVA and collector kV base (positive sequence)

e) B_1 = _____ µF or_____ pu on 100 MVA and collector kV base (positive sequence)

f) R_0 =_____ ohm or _____ pu on 100 MVA and collector kV base (zero sequence)

g) X_0 = _____ ohm or _____ pu on 100 MVA and collector kV base (zero sequence)

h) B_0 = _____ µF or _____ pu on 100 MVA and collector kV base (zero sequence)

5. Inverter Step-Up Transformers.

a) Number of inverter step-up transformers: _____ Rating: _____ MVA

Two-Winding Inverter Step-Up Transformer Data (as applicable):

b) Nominal Voltage for each winding (Low/High): _____/ _____kV

c) Winding Connections (Low/High): Delta or Wye / Delta or Wye

d) Available taps: _____ /_____ /_____ /_____ /_____ kV or _____% _____# of taps.

e) Positive sequence impedance (Z_1) _____ %, _____ X/R on MVA rating above.

f) Zero sequence impedance (Z_0) _____ %, _____X/R on MVA rating above.

Three-Winding Inverter Step-Up Transformer Data (as applicable)

g) GSU connection and winding (attach diagram and mark to reference this form).

	H Winding Data	X Winding Data	Y Winding Data
Full load ratings (i.e. OA/FA/FA)	_____/_____/_____ MVA	_____/_____/_____ MVA	_____/_____/_____ MVA
Rated high side voltage base	_____ kV Delta or Wye connected	_____ kV Delta or Wye connected	_____ kV Delta or Wye connected
Tap positions available	_____/_____/_____/ _____/_____ kV	_____/_____/_____/ _____/_____ kV	_____/_____/_____/ _____/_____ kV
Present Tap Setting (if applicable)	_____ kV	_____ kV	_____ kV
Neutral solidly grounded? (or) Neutral Grounding Resistor (if applicable)	_____ _____ Ohms	_____ _____ Ohms	_____ _____ Ohms
BIL rating	_____ kV	_____ kV	_____ kV

Three-Winding Inverter Step-Up Transformer Impedance Data (as applicable)

	H-X Winding Data	H-Y Winding Data	X-Y Winding Data
Transformer base for impedances provided	_____ MVA	_____ MVA	_____ MVA
Positive sequence impedance Z_1	_____ % _____ X/R	_____ % _____ X/R	_____ % _____ X/R
Zero sequence impedance Z_0	_____ % _____ X/R	_____ % _____ X/R	_____ % _____ X/R

6. Inverter and PV Module Data.

a) Number of Inverters: _____

b) Nameplate Rating (each Inverter): _____ kW/_____ kVA

c) Describe reactive capability: _____

d) Inverter Manufacturer and Model #: _____

e) PV Module Manufacturer and Model #: _____

f) Provide with this form the dynamic modeling data, including plant volt/var control function model and active power/frequency control function model, in a Siemens/PTI PSS/E standard model. If a user-written model is submitted in place of a standard model, it must include the dynamic device performance characteristics including explanation of constants and a block diagram. All of the associated files, including source code, for dynamic modeling should be in PSS/E version conforming to the JEA requirement at the time of submitting the Interconnection Request , and must be shareable on an FRCC regional and interconnection-wide basis to support use in the interconnection-wide cases (As required by MOD-32)._____

g) Are inverters part of a certified package (UL1741)?_____

7. Plant Reactive Power Compensation (beyond the inverters built-in reactive capability).

a) Type of reactive compensation device(s): **Fixed** or **Dynamic**

b) Individual fixed shunt reactive device type: _____

- Number and size of each: _____×_____ MVA

c) Dynamic reactive control device (e.g., SVC, STATCOM):_____

d) Control range at rated MW output: _____ Mvar (lead and lag)

e) Control mode (e.g., voltage, power factor, reactive power):_____

f) Regulation point: _____

g) Describe the overall reactive power control strategy: _____

h) Provide with this form the dynamic modeling data in a Siemens/PTI PSS/E standard model. If a user-written model is submitted in place of a standard model, it must include the dynamic device performance characteristics including explanation of constants and a block diagram. All of the associated files, including source code, for dynamic modeling should be in PSS/E version conforming to the JEA requirement at the time of submitting the Interconnection Request, and must be shareable on an FRCC regional and interconnection-wide basis to support use in the interconnection-wide cases (As required by MOD-32)._____

8. Short Circuit Contribution of the Generating Facility at the Point of Interconnection.

a) Maximum Three Phase Fault Current: _____Amps and Duration: _____

b) Maximum Single Line to Ground Fault* Current: _____Amps and Duration: _____

* Single Line to Ground Fault at the Point of Interconnection with ties to utility at the POI open.

9. Harmonic Distortion of the plant at Point of Interconnection.

a) Total Harmonic Current Distortion: _____ %

b) Provide with this data form the individual harmonic currents through 49th harmonic, in % of fundamental current rating. _____

APPENDIX 2 to JPGITS
INTERCONNECTION FEASIBILITY STUDY AGREEMENT

THIS AGREEMENT is made and entered into this___day of _____, 20___ by and between_____ , a _____ organized and existing under the laws of the State of _____, ("Interconnection Customer,") and **JEA,** a body politic and corporate created and established by Chapter 67-1569 under the laws of the State of Florida, ("JEA "). Interconnection Customer and JEA each may be referred to as a "Party," or collectively as the "Parties."

RECITALS

WHEREAS, Interconnection Customer is proposing to develop a Transmission Interconnected Generating Facility or generating capacity addition to an existing Generating Facility consistent with the Interconnection Request submitted by Interconnection Customer dated _____ ; and

WHEREAS, Interconnection Customer desires to interconnect the Transmission Interconnected Generating Facility with the Transmission System; and

WHEREAS, Interconnection Customer has requested JEA to perform an Interconnection Feasibility Study to assess the feasibility of interconnecting the proposed Transmission Interconnected Generating Facility to the Transmission System, and of any Affected Systems;

NOW, THEREFORE, in consideration of and subject to the mutual covenants contained herein the Parties agreed as follows:

1.0 When used in this Agreement, with initial capitalization, the terms specified shall have the meanings indicated in JEA's JPGITS.

2.0 Interconnection Customer elects and JEA shall cause to be performed an Interconnection Feasibility Study consistent with Section 6.0 of this JPGITS.

3.0 The scope of the Interconnection Feasibility Study shall be subject to the assumptions set forth in Attachment A to this Agreement.

4.0 The Interconnection Feasibility Study shall be based on the technical information provided by Interconnection Customer in the Interconnection

Request, as may be modified as the result of the Scoping Meeting. JEA reserves the right to request additional technical information from Interconnection Customer as may reasonably become necessary consistent with Good Utility Practice during the course of the Interconnection Feasibility Study and as designated in accordance with Section 3.3.4 of the JPGITS. If, after the designation of the Point of Interconnection pursuant to Section 3.3.4 of the JPGITS, Interconnection Customer modifies its Interconnection Request pursuant to Section 4.4, the time to complete the Interconnection Feasibility Study may be extended.

5.0 The Interconnection Feasibility Study report shall provide the following information:

A. preliminary identification of any circuit breaker short circuit capability limits exceeded as a result of the interconnection;

B. preliminary identification of any thermal overload or voltage limit violations resulting from the interconnection; and

C. preliminary description and non-bonding estimated cost of facilities required to interconnect the Transmission Interconnected Generating Facility to the Transmission System and to address the identified short circuit and power flow issues.

6.0 Interconnection Customer shall provide a deposit of $10,000 for the performance of the Interconnection Feasibility Study.

Upon receipt of the Interconnection Feasibility Study JEA shall charge and Interconnection Customer shall pay the actual costs of the Interconnection Feasibility Study.

Any difference between the deposit and the actual cost of the study shall be paid by or refunded to Interconnection Customer, as appropriate.

7.0 Miscellaneous. The Interconnection Feasibility Study Agreement shall include standard miscellaneous terms including, but not limited to, indemnities, representations, disclaimers, warranties, governing law, amendment, execution, waiver, enforceability and assignment, that reflect best practices in the electric industry, and that are consistent with regional practices, Applicable Laws and Regulations, and the organizational nature of each Party. All of these provisions, to the extent practicable, shall be consistent with the provisions of the JPGITS and the JAGITS.

IN WITNESS WHEREOF, the Parties have caused this Agreement to be duly executed by their duly authorized officers or agents on the day and year first above written.

Project Name:_____

JEA

By: _____

Title: _____

Date: _____

[Interconnection Customer]

By: _____

Title: _____

Date: _____

Attachment A to Appendix 2
Interconnection Feasibility
Study Agreement

ASSUMPTIONS USED IN CONDUCTING THE INTERCONNECTION FEASIBILITY STUDY

The Interconnection Feasibility Study will be based upon the information set forth in the Interconnection Request and agreed upon in the Scoping Meeting held on

_____

Designation of Point of Interconnection and configuration to be studied.
Designation of alternative Point(s) of Interconnection and configuration.

[Above assumptions to be completed by Interconnection Customer and other assumptions to be provided by Interconnection Customer and JEA]

APPENDIX 3 to JPGITS
INTERCONNECTION SYSTEM IMPACT STUDY AGREEMENT

THIS AGREEMENT is made and entered into this___day of _____, 20___ by and between_____, a _____organized and existing under the laws of the State of _____, ("Interconnection Customer,") and **JEA**, a body politic and corporate created and established by Chapter 67-1569 under the laws of the State of Florida, ("JEA "). Interconnection Customer and JEA each may be referred to as a "Party," or collectively as the "Parties."

RECITALS

WHEREAS, Interconnection Customer is proposing to develop a Transmission Interconnected Generating Facility or generating capacity addition to an existing Generating Facility consistent with the Interconnection Request submitted by Interconnection Customer dated _____; and

WHEREAS, Interconnection Customer desires to interconnect the Transmission Interconnected Generating Facility with the Transmission System; and

WHEREAS, JEA has completed an Interconnection Feasibility Study (the "Feasibility Study") and provided the results of said study to Interconnection Customer (This recital to be omitted if JEA does not require the Interconnection Feasibility Study.); and

WHEREAS, Interconnection Customer has requested JEA to perform an Interconnection System Impact Study to assess the impact of interconnecting the Transmission Interconnected Generating Facility to the Transmission System, and of any Affected Systems;

NOW, THEREFORE, in consideration of and subject to the mutual covenants contained herein the Parties agreed as follows:

1.0 When used in this Agreement, with initial capitalization, the terms specified shall have the meanings indicated in JEA's JPGITS.

2.0 Interconnection Customer elects and JEA shall cause to be performed an Interconnection System Impact Study consistent with Section 7.0 of this JPGITS.

3.0 The scope of the Interconnection System Impact Study shall be subject to the assumptions set forth in Attachment A to this Agreement.

4.0 The Interconnection System Impact Study will be based upon the results of the Interconnection Feasibility Study and the technical information provided by Interconnection Customer in the Interconnection Request, subject to any modifications in accordance with Section 4.4 of the JPGITS. JEA reserves the right to request additional technical information from Interconnection Customer as may reasonably become necessary consistent with Good Utility Practice during the course of the Interconnection Customer System Impact Study. If Interconnection Customer modifies its designated Point of Interconnection, Interconnection Request, or the technical information provided therein is modified, the time to complete the Interconnection System Impact Study may be extended.

5.0 The Interconnection System Impact Study will be conducted in accordance with JEA planning criteria using Florida Reliability Coordinating Council (FRCC) databank as well as all applicable FRCC Processes and Procedures.

6.0 The Interconnection System Impact Study report shall provide the following information:

A identification of any circuit breaker short circuit capability limits exceeded as a result of the interconnection;

B identification of any thermal overload or voltage limit violations resulting from the interconnection;

C identification of any instability or inadequately damped response to system disturbances resulting from the interconnection and

D description and non-binding, good faith estimated cost of facilities required to interconnect the Transmission Interconnected Generating Facility to the Transmission System and to address the identified short circuit, instability, and power flow issues.

7.0 Interconnection Customer shall provide a deposit of $50,000 for the performance of the Interconnection System Impact Study. JEA's good faith estimate for the time of completion of the Interconnection System Impact Study is [insert date].

Upon receipt of the Interconnection System Impact Study, JEA shall charge and Interconnection Customer shall pay the actual costs of the Interconnection System Impact Study.

Any difference between the deposit and the actual cost of the study shall be paid by or refunded to Interconnection Customer, as appropriate.

8.0 Miscellaneous. The Interconnection System Impact Study Agreement shall include standard miscellaneous terms including, but not limited to, indemnities, representations, disclaimers, warranties, governing law, amendment, execution, waiver, enforceability and assignment, that reflect best practices in the electric industry, that are consistent with regional practices, Applicable Laws and Regulations and the organizational nature of each Party. All of these provisions, to the extent practicable, shall be consistent with the provisions of the JPGITS and the JAGITS.]

IN WITNESS THEREOF, the Parties have caused this Agreement to be duly executed by their duly authorized officers or agents on the day and year first above written.

Project Name:_____

JEA

By: _____

Title: _____

Date: _____

[Interconnection Customer]

By: _____

Title: _____

Date: _____

Attachment A To Appendix 3
Interconnection System Impact
Study Agreement

ASSUMPTIONS USED IN CONDUCTING THE INTERCONNECTION SYSTEM IMPACT STUDY

The Interconnection System Impact Study will be based upon the results of the Interconnection Feasibility Study, subject to any modifications in accordance with Section 4.4 of the JPGITS, and the following assumptions:

Designation of Point of Interconnection and configuration to be studied.
Designation of alternative Point(s) of Interconnection and configuration.

[Above assumptions to be completed by Interconnection Customer and other assumptions to be provided by Interconnection Customer and JEA]

APPENDIX 4 to JPGITS
INTERCONNECTION FACILITIES STUDY AGREEMENT

THIS AGREEMENT is made and entered into this____day of _____, 20____by and between_____, a _____ organized and existing under the laws of the State of _____, ("Interconnection Customer,") and **JEA**, a body politic and corporate created and established by Chapter 67-1569 under the laws of the State of Florida, ("JEA "). Interconnection Customer and JEA each may be referred to as a "Party," or collectively as the "Parties."

RECITALS

WHEREAS, Interconnection Customer is proposing to develop a Transmission Interconnected Generating Facility or generating capacity addition to an existing Generating Facility consistent with the Interconnection Request submitted by Interconnection Customer dated _____; and

WHEREAS, Interconnection Customer desires to interconnect the Transmission Interconnected Generating Facility with the Transmission System;

WHEREAS, JEA has completed an Interconnection System Impact Study (the "System Impact Study") and provided the results of said study to Interconnection Customer; and

WHEREAS, Interconnection Customer has requested JEA to perform an Interconnection Facilities Study to specify and estimate the cost of the equipment, engineering, procurement and construction work needed to implement the conclusions of the Interconnection System Impact Study in accordance with Good Utility Practice to physically and electrically connect the Transmission Interconnected Generating Facility to the Transmission System.

NOW, THEREFORE, in consideration of and subject to the mutual covenants contained herein the Parties agreed as follows:

1.0 When used in this Agreement, with initial capitalization, the terms specified shall have the meanings indicated in JEA's JPGITS.

2.0 Interconnection Customer elects and JEA shall cause an Interconnection Facilities Study consistent with Section 8.0 of this JPGITS.

3.0 The scope of the Interconnection Facilities Study shall be subject to the assumptions set forth in Attachment A and the data provided in Attachment B to this Agreement.

4.0 The Interconnection Facilities Study report
(i) shall provide a description, estimated cost of (consistent with Attachment A), schedule for required facilities to interconnect the Transmission Interconnected Generating Facility to the Transmission System and
(ii) shall address the short circuit, instability, and power flow issues identified in the Interconnection System Impact Study.

5.0 Interconnection Customer shall provide a deposit of $100,000 for the performance of the Interconnection Facilities Study. The time for completion of the Interconnection Facilities Study is specified in Attachment A.

6.0 Miscellaneous. The Interconnection Facility Study Agreement shall include standard miscellaneous terms including, but not limited to, indemnities, representations, disclaimers, warranties, governing law, amendment, execution, waiver, enforceability and assignment, that reflect best practices in the electric industry, and that are consistent with regional practices, Applicable Laws and Regulations, and the organizational nature of each Party. All of these provisions, to the extent practicable, shall be consistent with the provisions of the JPGITS and the JAGITS.

IN WITNESS WHEREOF, the Parties have caused this Agreement to be duly executed by their duly authorized officers or agents on the day and year first above written.

Project Name:_____

JEA

By: _____

Title: _____

Date: _____

[Interconnection Customer]

By: _____

Title: _____

Date: _____

Attachment A To Appendix 4
Interconnection Facilities
Study Agreement

SCHEDULE FOR CONDUCTING THE INTERCONNECTION FACILITIES STUDY

JEA shall use Reasonable Efforts to complete the study and issue a draft Interconnection Facilities Study report to Interconnection Customer within the following number of days after of receipt of an executed copy of this Interconnection Facilities Study Agreement:

- one hundred eighty (180) Calendar Days with no more than a +/- 20 percent cost estimate contained in the report

Attachment B to Appendix 4
Interconnection Facilities
Study Agreement

DATA FORM TO BE PROVIDED BY INTERCONNECTION CUSTOMER WITH THE INTERCONNECTION FACILITIES STUDY AGREEMENT

Provide location plan and simplified one-line diagram of the plant and station facilities. For staged projects, please indicate future generation, transmission circuits, etc.

One set of metering is required for each generation connection to the new ring bus or existing JEA station. Number of generation connections:

On the one line diagram indicate the generation capacity attached at each metering location. (Maximum load on CT/PT)

On the one line diagram indicate the location of auxiliary power. (Minimum load on CT/PT) Amps

Will an alternate source of auxiliary power be available during CT/PT maintenance?
_____Yes _____ No

Will a transfer bus on the generation side of the metering require that each meter set be designed for the total plant generation? _____Yes _____No (Please indicate on one line diagram).

What type of control system or PLC will be located at Interconnection Customer's Transmission Interconnected Generating Facility?

_____

What protocol does the control system or PLC use?

_____

Please provide a 7.5-minute quadrangle of the site. Sketch the plant, station, transmission line, and property line.

Physical dimensions of the proposed interconnection station:

_____

Bus length from generation to interconnection station:

_____

Line length from interconnection station to JEA's transmission line.

_____

Tower number observed in the field. (Painted on tower leg)* _____

Number of third party easements required for transmission lines*:

_____

* To be completed in coordination with JEA.

Is the Transmission Interconnected Generating Facility in JEA's service area?

_____Yes _____No Local provider: _____

Please provide proposed schedule dates:

Begin Construction	Date: _____
Generator step-up transformer receives back feed power	Date: _____
Generation Testing	Date: _____
Commercial Operation	Date: _____

APPENDIX 5 to JPGITS
OPTIONAL INTERCONNECTION STUDY AGREEMENT

THIS AGREEMENT is made and entered into this___day of _____, 20_ by and between_____, a _____ organized and existing under the laws of the State of _____, ("Interconnection Customer,") and **JEA**, a body politic and corporate created and established by Chapter 67-1569 under the laws of the State of Florida, ("JEA "). Interconnection Customer and JEA each may be referred to as a "Party," or collectively as the "Parties."

RECITALS

WHEREAS, Interconnection Customer is proposing to develop a Transmission Interconnected Generating Facility or generating capacity addition to an existing Generating Facility consistent with the Interconnection Request submitted by Interconnection Customer dated _____;

WHEREAS, Interconnection Customer is proposing to establish an interconnection with the Transmission System; and

WHEREAS, Interconnection Customer has submitted to JEA an Interconnection Request; and

WHEREAS, on or after the date when Interconnection Customer receives the Interconnection System Impact Study results, Interconnection Customer has further requested that JEA prepare an Optional Interconnection Study;

NOW, THEREFORE, in consideration of and subject to the mutual covenants contained herein the Parties agree as follows:

1.0 When used in this Agreement, with initial capitalization, the terms specified shall have the meanings indicated in JEA's JPGITS.

2.0 Interconnection Customer elects and JEA shall cause an Optional Interconnection Study consistent with Section 10.0 of this JPGITS.

3.0 The scope of the Optional Interconnection Study shall be subject to the assumptions set forth in Attachment A to this Agreement.

4.0 The Optional Interconnection Study shall be performed solely for informational purposes.

5.0 The Optional Interconnection Study report shall provide a sensitivity analysis based on the assumptions specified by Interconnection Customer in Attachment A to this Agreement. The Optional Interconnection Study will identify JEA's Interconnection Facilities and the Network Upgrades, and the estimated cost thereof, that may be required to provide transmission service or interconnection service based upon the assumptions specified by Interconnection Customer in Attachment A.

6.0 Interconnection Customer shall provide a deposit of $10,000 for the performance of the Optional Interconnection Study. JEA's good faith estimate for the time of completion of the Optional Interconnection Study is [insert date].

Upon receipt of the Optional Interconnection Study, JEA shall charge and Interconnection Customer shall pay the actual costs of the Optional Study.

Any difference between the initial payment and the actual cost of the study shall be paid by or refunded to Interconnection Customer, as appropriate.

7.0 Miscellaneous. The Optional Interconnection Study Agreement shall include standard miscellaneous terms including, but not limited to, indemnities, representations, disclaimers, warranties, governing law, amendment, execution, waiver, enforceability and assignment, that reflect best practices in the electric industry, and that are consistent with regional practices, Applicable Laws and Regulations, and the organizational nature of each Party. All of these provisions, to the extent practicable, shall be consistent with the provisions of the JPGITS and the JAGITS.

IN WITNESS WHEREOF, the Parties have caused this Agreement to be duly executed by their duly authorized officers or agents on the day and year first above written.

Project Name:_____

JEA

By: _____

Title: _____

Date: _____

[Interconnection Customer]

By: _____

Title: _____

Date: _____

Attachment A to Optional Interconnection Study Agreement

ASSUMPTIONS USED IN CONDUCTING
THE OPTIONAL INTERCONNECTION STUDY

[To be completed by Interconnection Customer consistent with Section 10 of the JPGITS.]