New England Division

Seabrook Substation Reliability Improvement Project

1. Project Summary Description

- Seabrook Substation is critical to ISO-New England as a Pool Transmission Facility, to grid availability for Seabrook Generator and to fulfill NRC loss of offsite power requirements to a nuclear generating station.
- FPL-NED has a rigorous maintenance program. However, the Seabrook Substation was built in 1982 with first generation GIS technology and equipment failures experienced during the past 2 years have affected availability of the Seabrook Generator, causing in excess of 26 days of unplanned outages since Feb. 2007.
- Existing design of the Seabrook Substation which has the Reserve Auxiliary Transformers (RAT) connected directly to Bus No. 2 is not optimal and poses reliability concerns as well as operational limitations.
- FPL-NED's Project cost effectively improves: i) 345kV line reliability, ii) generator availability and iii) ability to perform maintenance or future upgrades as required without the need for a generator outage.
- Generator refueling outages which are critical to switchyard construction work (e.g. cutover and commissioning of new facilities) are at 18 month intervals and FPL-NED proposes to complete the Project over the next two refueling outages (October 2009; April 2011).
- The Project, which will be conducted in two stages, is the most cost-effective to significantly improve reliability
  - Two dedicated busses improve the reliability and maintainability of the three 345 kV transmission lines interconnected through the Seabrook Substation.
  - Improves the availability of the Seabrook Generator to New England and increases offsite power reliability per NRC requirements.
  - Modified design provides more separation between transmission lines and the Seabrook Generator. This reduces impact of events that involve a line fault and breaker failure.
  - Improved design will allow more flexibility for clearances to perform future maintenance and upgrades outside of Generator outages and without placing lines in a single-contingency condition.
  - If all permits and approvals are received by March, 2009, then Stage 1 of this project will be completed during the October 2009 refueling outage requiring only a Line 369 outage, and during the April 2011 refueling outage, Stage 2 will be completed.
  - Modified RAT and GSU interconnection is standard design for typical FPL Nuclear substations.

2. Problem Statement

Seabrook 345-kV Substation (S/S), located in Seabrook, New Hampshire, is a major bulk power transmission system facility and a critical node on the ISO-New England (ISO-NE) transmission grid. The substation was originally built in 1982 with a gas insulated substation (GIS) design (first generation technology) and consists of eight circuit breakers. The substation is owned, maintained and operated by Florida Power and Light Company - New England Division (FPL-NED). As shown in Figure 1 below, the circuit breakers at Seabrook S/S are arranged in a breaker and one half scheme with connections for five key transmission elements: Line 394 (Ward Hill – Tewksbury); Line 363 (Scobie Pond) and Line 369 (Timber Swamp – Newington); the reserve auxiliary transformers (RATs) and generator step up transformers (GSUs) used to interconnect the 1318 MW nuclear power station and unit auxiliary transformer (UAT).

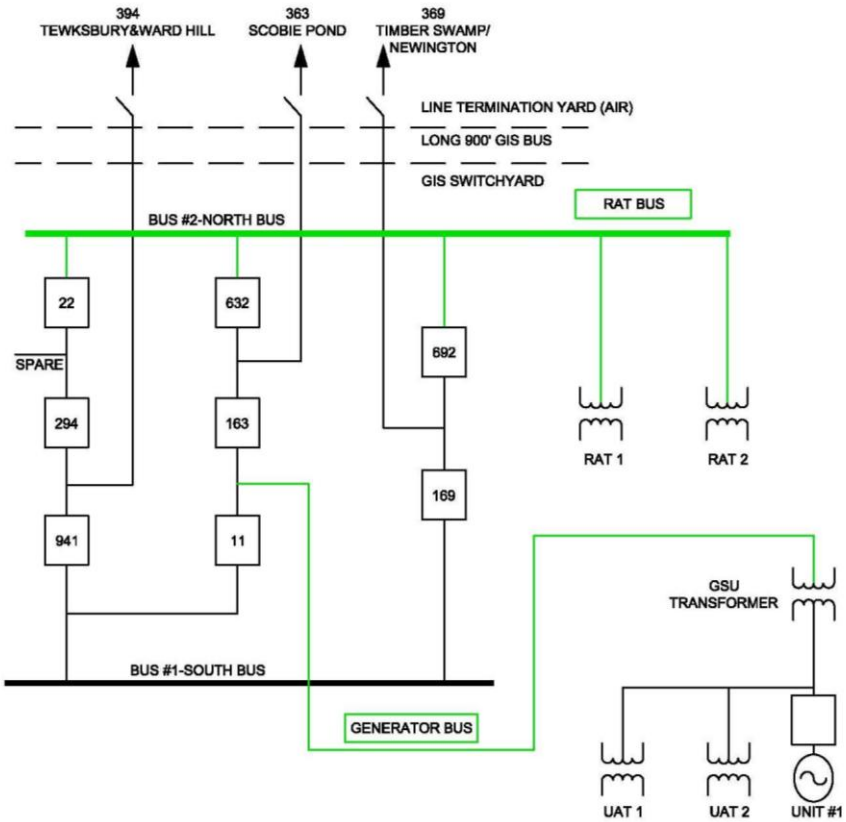

Figure 1 – Existing Seabrook 345-kV Substation

FPL-NED has implemented and continues to exercise a rigorous maintenance program on the Seabrook Substation. However, the substation is 26 years old and equipment failures experienced during the past two years have affected availability of the transmission lines and nuclear station causing 26 days of unplanned outages since February 2007. Component failures on the rupture discs, switch rods and connections involving the RATs and GSUs have caused recent station outages.

The existing substation design of the Seabrook S/S which has the RATs connected directly to Bus No. 2 is not optimal and poses reliability concerns as well as operational limitations. In the event a fault occurs simultaneous with a breaker failure (eg. 632, and/or 692) then one of the 345-kV lines and the RATs will be lost. Due to the direct connection to Bus No. 2, the failure of the RAT will also result in an outage of Bus No. 2 which severely lowers the reliability performance of the station. This design configuration has limited operating flexibility that does not allow for efficient and effective maintenance of substation equipment. Table 1 below demonstrates the impact on substation reliability performance of the RAT connection onto Bus No. 2. Design modifications are needed to move the RAT connection into a dedicated terminal position within the substation which will substantially improve the reliability of the Seabrook 345-kV Substation.

Condition	Fault	Action	Result
All Facilities In-service	RAT Failure with Stuck 692 Breaker	Trips 369 (to Timber Swamp)	Loss of 345-kV transmission line
	RAT Failure with Stuck 632 Breaker	Trips 363 (to Scobie Pond)	Opens NNE-Scobie + 394 Interface Facility
	Fault on Line 369 with Stuck 692 Breaker	Trips Bus No. 2 and RAT	May require backdown of Seabrook generator
	Fault on Line 363 with Stuck 632 Breaker	Trips Bus No. 2 and RAT	May require backdown of Seabrook generator
Breaker 941 Open	RAT Failure	Open Breaker 22, 632, and 692 and Isolates Line 394	Opens NNE-Scobie +394 and North-South Interface Facility
Breaker 169 Open	RAT Failure	Open Breaker 22, 632, and 692 and Isolates Line 369	Loss of 345-kV transmission line
Breaker 163 Open	RAT Failure	Open Breaker 22, 632, and 692 and Isolates Line 363	Opens NNE-Scobie + 394 Interface Facility

Table 1 - List of Contingencies Involving RAT and Bus No. 2

NRC design requirements for Seabrook Nuclear Generating Station require that the Seabrook 345-kV Substation provide for independent and redundant paths to ensure an available off-site power supply for “N-2” contingency conditions. These are codified in the NRC-approved Technical Specifications (Tech. Specs.) and Unit Final Safety Analysis Report (UFSAR). In addition, loss of either off-site power connection (UAT or RAT) places the generating station in an immediate Limited Condition of Operation (LCO). The LCO can require station back down which may have undesired effects on grid reliability and wholesale market prices.

A second reliability concern is the generator connection which shares a breaker bay with Line 363. The Seabrook generator is the largest single unit in New England, New York and Canadian Maritimes control areas. A fault on Line 363 with a failed breaker or relay misoperation results in the Seabrook generator being tripped. In addition, maintenance on Breaker 163 with a fault on either Line 394 or 369 with a stuck breaker also trips the 1318 MW Seabrook generator.

Condition	Fault	Action	Result
All Facilities In-service	363 Fault with Stuck 163 Breaker	Trips 1318 MW Generator	Largest source loss in Northeast region
Breaker 163 Open	Fault on Line 394 and	Trips 1318 MW Generator	Largest source loss in

	Stuck 941 Breaker		Northeast region
	Fault on Line 369 and Stuck 169 Breaker	Trips 1318 MW Generator	Largest source loss in Northeast region
Breaker 11 Open	Fault on Line 363 and Stuck 632 Breaker	Trips 1318 MW Generator and RAT	Remove both offsite power supplies and largest source loss in Northeast region

Table 2 – List of Contingencies Tripping the Seabrook Generator

FPL-NED recommends modifications to improve substation reliability for the transmission lines, 1318 MW generator and offsite power supply for the nuclear station. In addition, condition assessments of the entire switchyard are underway, switch rods are being replaced and proposals are being prepared to add GIS equipment monitoring and failure detection systems.

Stage 1

Seabrook Switchyard Reliability Project (October-December 2009)

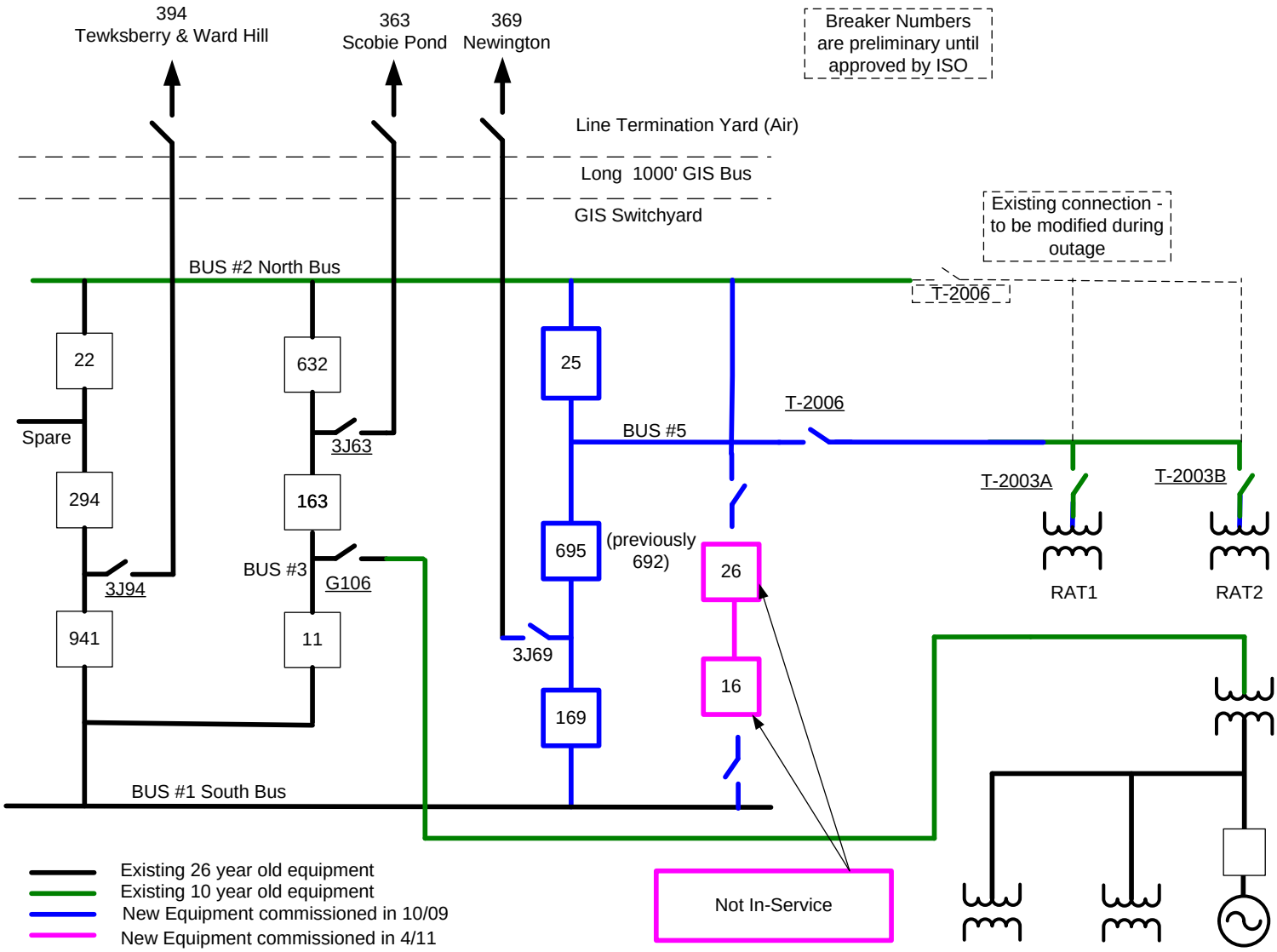

Stage 1 - $51.3 Million

Total Project - $63 Million

Stage 2

Seabrook Reliability Project
(January 2010-April, 2011)

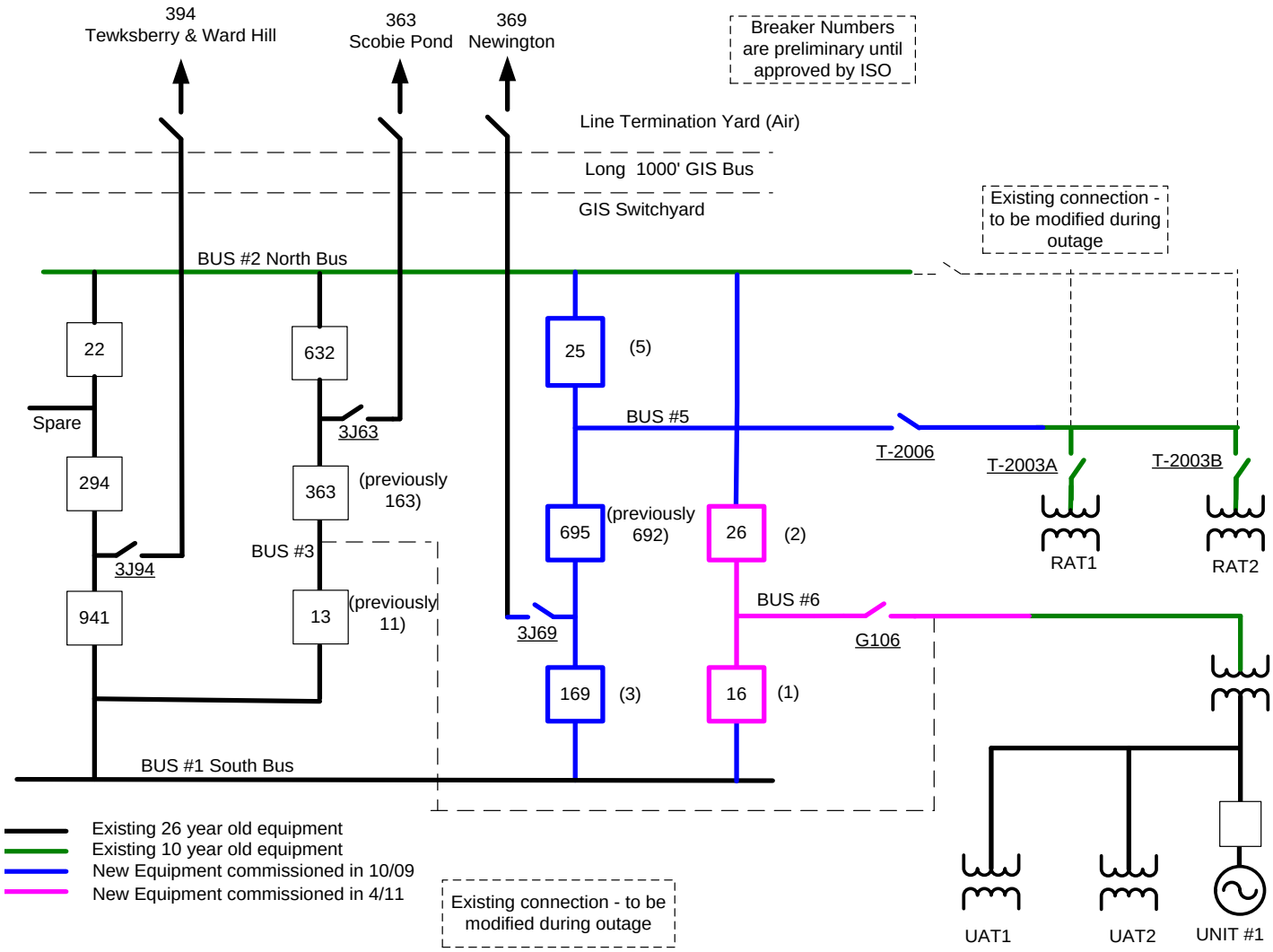

Stage 2 - 2010- $2.8 Million: 2011 - $8.9 Million
Total Project - $63 Million