Facility Study
For the Q149
45.0 MW Net Solar Plant
Lake Placid North (476) Substation

Rev. 1, 07/09/18

Table of Contents

1.0 SCOPE

Develop a facility study for the Q149 interconnection of a 45.0 MW Net Solar Plant to the Lake Placid North (476) Substation. The Facilities Study will specify and estimate the cost of the equipment, engineering, procurement and construction work needed to implement the conclusions of the Interconnection System Impact Study in accordance with Good Utility Practice to physically and electrically connect the Solar Generating Facility to the Transmission System.

2.0 EXECUTIVE SUMMARY

The Q149 Facility Study connects a 45 MW solar plant to Lake Placid North's (LKPN) 69 kV Bus #1. The LKPN Bus #1 was selected to facilitate the solar plant's 69 kV transmission line approach from the east side of the substation. The new breaker terminal will require the east fence to be moved out approximately 38.5 feet. The interconnection is made through a single 3000 A breaker terminal connected through a dead end mounted disconnect switch. The solar plant transmission line is protected by two communication assisted line current differential relays. The line terminal is provided with a set of combination instrument transformers for metering and a set of potential transformers for protection and control.

The LKPN 69 kV Bus #1 is currently connected to the Desoto Line through a motor operated disconnect switch with both line and bus combined in the same protection zone. The Desoto Line protection zone will be pulled back to a new single 3000 A breaker terminal with the line protected in primary and back-up step-distance schemes. The line terminal is provided with a set of potential transformers for protection and control.

The LKPN 69 kV Bus #1 will be wrapped in a single differential zone bounded by two new line breakers (Solar Tie and Desoto), bus tie breaker 6161, and circuit switcher 6045.

Five new panels are included to support line, bus, and metering. Three new protection and control panels, one each for the LKPN Solar and Desoto Lines and the other for the 69 kV Bus #1 differential. Two additional panels are required to facilitate LKPN Solar metering and non-control SCADA communication.

The solar plant interconnection and the associated changes described above require the existing battery capacity be increased from 100 AH to 290 AH battery. The replacement battery and rack will be installed in a new 10 ft. x 20 ft. control equipment enclosure (CEE). The installation of the new enclosure will provide adequate space for the new battery as well as open additional space in the existing CEE. Between both enclosures, ample room is provided for the five new racks.

3.0 DEFINITIONS

3.1 Interconnection Facility Customer is referred to as Lake Placid North Solar in this study.

3.2 Transmission Provider is defined as Duke Energy Florida (DEF).

3.3 The Point of Interconnection (POI) is the point of connection between two entities' respective transmission systems, i.e., between Lake Placid North Solar and DEF.

3.4 Lake Placid North (LKPN) Substation is located south of the proposed solar generating facility with the inter-tie transmission line accessing the substation from the east.

4.0 ASSUMPTIONS

4.1 Labor cost in the standard plates are increased by a factor of three.

4.2 Solar facilities are synchronized to the grid through their collector breaker and inverter controller. This, in conjunction with input 6.1.2.5, negates the need for synchronizing a solar facility to the grid through the Lake Placid North substation breaker.

4.3 The Lake Placid North substation does not employ breaker failure protection. Neither the Lake Placid North Solar Tie-Line breaker nor the Desoto Line breaker have been conceptualized with breaker failure protection.

4.3.1 It is noted that implementation of a breaker failure scheme on either breaker would result in minimal engineering and labor cost if one or both were to have breaker failure deployed.

4.4 No ten-year substation expansions will interfere with the Q149 conceptual connection of this facility study.

4.5 No single failure relay analysis requires additional protection zones and/or upgrades that would impact the conceptual facility protection zones defined under Figure 6 of this study.

4.6 The Q149 facility study provides conceptual design details that assume equipment installation at the solar facility by customer (also see Section 6.1.2.2 of this study). In some instances, these requirements may be modified during the actual design phase. Good utility practice and Duke Energy Florida requirements were applied to ensure a conservative cost estimate for the facility connection. These requirements are provided as assumptions since they were not negotiated with the customer under the interconnection agreement.

4.6.1 The solar tie-line is protected by two communication assisted line current differential relays. The DEF LPD1 standard is applied which includes a customer-owned LPD1 panel in the solar facility with matching relay models, firmware, and settings.

4.6.2 Installation of a communication assisted line differential scheme is contingent on fiber communication between the solar facility and LKPN substation. The conceptual design assumes this to be an optical ground wire (OPGW) installed with the solar generator tie-line.

4.6.3 The facility study incorporates a DEF design requirement to install the solar facility revenue meters in the transmission provider's substation (Ref. 6.3.3.3.2). This design requirement is contrary to the preliminary single line diagram (Attachment 13.3) provided by the customer which reflects a revenue meter in the solar facility.

4.6.4 A SEL Axion System is installed in the LKPN substation and will communicate via EtherCAT with the RTAC controller in the solar facility. The Axion system is networked with the RTAC to meet the requirement of 6.2.3.1. The Axion does not communicate with any Transmission Provider SCADA networks.

4.6.5 It is assumed that the Desoto Line does not have available fiber to upgrade the line protection to current differential.

4.6.6 The installation will require an Ethernet switch for the non-controlled SCADA network. The existing CEE's TCOMM Panel has ample space for a new switch. A new TCOMM panel has not been provided in the cost estimate, although space is available for future expansion in the new CEE.

5.0 POINT OF INTERCONNECTION

The following point(s) of interconnection are stated here and addressed in detail in the following sections of this study.

5.1 The point of interconnection is defined as the line segment (drop) from the transmission line at a new dead-end structure to the breaker's line side disconnect switch. The connection will be a single terminal breaker off Lake Placid North 69 kV Bus #1 (Figure 1).

5.2 The telecommunication interconnection of the solar facility and Lake Placid North substation will be provided over an optical ground wire (OPGW). The point of communication interconnection is defined at the fiber splice in the fiber optic splice enclosure (Reference 14.16 Section 18.6.2).

6.0 FACILITY CONNECTION REQUIREMENTS and INPUTS

6.1 Duke Energy Florida Facility Connection Requirements (Reference 14.1)

6.1.1 Substation Physical

6.1.1.1 The new bay breaker connecting Q149 to the Lake Placid North 69 kV Bus #1 will be rated based on the following load and short circuit values [Ref. 14.2]:

6.1.1.1.1 The solar facility is rated at a maximum 45.0 MW with a continuous current load of 396.35 A @ 0.95 p.u. voltage.

6.1.1.1.2 The maximum three phase fault current is defined at 5311.1 A by Appendix B of Reference 14.2.

6.1.2 Protection & Control

6.1.2.1 Protection systems for interconnection points are designed to prevent and/or minimize the possibility of an event within one of the systems affecting or cascading into the other system [Sec. 2.1.1 – End-User Facilities].

6.1.2.2 Adjoining power systems may share a common zone of protection between two parties. Compatible relaying equipment must be used on each side of the point of ownership within a given zone of protection [Sec. 2.1.5 – End-User Facilities].

6.1.2.3 Section 2.1.5, "System Protection and Coordination (Engineering)" of Reference 14.1 does not specifically require two independent high-speed protection systems unless backup clearing results in instability. The Q149 System Impact Study of reference 14.3 (input 6.2.2.2), requires a total line clearing time of 4.5 cycles. This is an assumption applied to transmission system line relaying in general and shall be applied as a design requirement for the solar facility interconnection with the Lake Placid North substation.

6.1.2.4 The following generalized criteria from Reference 14.1 are taken as design inputs to the Lake Placid North Solar Connection:

6.1.2.4.1 For short line applications (generally less than 2.5 miles), current line differential protection will be the preferred primary protection scheme.

6.1.2.4.2 A second high-speed relay (line differential) system with communications and no intentional time delay is required.

6.1.2.4.3 Mechanical and electrical logic and interlocking mechanisms are required between interconnected facilities to ensure safe and reliable operation.

- These include, but are not limited to, breaker and switch auxiliary contacts, undervoltage and synch-check relays, and physical locking devices.
- A transfer trip protection scheme is also required with a fiber optic communication scheme preferred.

6.1.2.5 When restoring interconnected generation facilities, it is DEF's practice to energize in the direction from the DEF system toward the de-energized generation facility, except as designated for black-start units. Synchronization of a generator to the energized DEF system is accomplished within the generation facility using the appropriate synch breaker.

6.1.3 Metering

6.1.3.1 The Lake Placid North Solar Facility shall provide real time telemeter data to DEF [Section 2.1.6].

6.1.3.2 Power flows to and from the generating facility shall be measured at or, at DEF's option, compensated to, the Point of Interconnection. The revenue meter should be located as close to the point of delivery (POI) as possible. Two options are supported by 14.1:

6.1.3.2.1 Locate the revenue meter at the solar facility, compensating for the line drop, or

6.1.3.2.2 Locate the revenue meter at Lake Placid North Substation at the point of interconnection.

6.1.3.3 Metering equipment may be located at either end of the transmission line but should be installed at the station closest to the change of ownership [Section 2.1.6/Transmission Facilities].

6.1.3.4 MW and MVAR data should be Net output values as measured at the low side of the generator step up transformer less any auxiliary load directly fed from the generator. In addition, the status of individual generator circuit breakers shall be provided [Section 2.1.6/Generating Facility].

6.1.3.5 When the metering location is different from the delivery point, compensation for losses is required for transformer losses and transmission line losses. Compensation should be performed internally by the installed metering equipment rather than by after-the-fact calculations [Section 2.1.6/End-User].

6.1.3.6 Real time analog and/or digital telemetered data shall be provided to DEF. The required data includes generator MW, MVAR, terminal voltage and switchyard high side voltages [Section 2.1.6/Generating Facility].

6.1.3.7 Metering CTs and PTs shall not be used to feed non-metering equipment such as protective relays [Section 2.1.6].

6.1.3.8 Phasor Measurement Units (Section 2.1.17)

6.1.3.8.1 For a non-synchronous generator facility, a phasor measurement unit (PMU) shall be installed on the high side of the generator step-up transformer.

6.1.3.8.2 The Lake Placid North System Impact Study (Ref. 14.3) defines the PMU installation at the POI; however, it also stipulates that its installation be in accordance with the Facility Connection Requirements (Ref. 14.1).

6.1.3.8.3 The requirement of Section 6.1.3.8.1 does not specifically install the PMU at the POI. Reference 14.1 supports the installation of a PMU at either end of the line. Installation of a PMU at either end meets the requirements of the interconnection agreement.

6.2 System Impact Study for the Q149 45.0 MW Net Solar Plant (References 14.2 and 14.3)

6.2.1 Based on the results of the simulations [contained within the references], the Q149 facility will not negatively impact the transient stability response of the bulk electric system. The analysis concludes the Q149 facility can be interconnected into Lake Placid 69kV Bus #1 or Bus #2.

6.2.2 The following are provided in the system impact study as assumptions and in all circumstances, apply to the existing transmission system design. They are being applied to the Lake Placid North solar facility tie-line protection with exceptions noted.

6.2.2.1 Pilot relaying was assumed on all lines at the POI and adjacent stations.

6.2.2.2 The total clearing time for line faults was assumed to be 4.5 cycles at both ends.

6.2.2.3 The total local breaker failure clearing time was assumed to be 21 cycles for all stations.

6.2.2.3.1 The existing substation breakers do not participate in any breaker failure schemes. The Lake Placid North Solar tie-line breaker will not implement breaker failure logic.

6.2.2.4 Bi-directional direct transfer trip was assumed on all lines at the POI and adjacent substations.

6.2.2.5 No high-speed reclosing (less than one second).

6.2.2.5.1 The Lake Placid North Solar (generator tie-line) breaker will not implement reclosing after a trip.

6.2.3 The original [PV dynamic software] solar model provided to DEF considers local inverter voltage control. The modified model [by DEF] considers remote control characteristic at the POI.

6.2.3.1 Real time POI voltage and frequency inputs shall be provided to the PV inverter controller.

6.3 Duke Energy Florida Design Inputs

6.3.1 Substation Physical

The following input was conveyed during the June 21, 2018 Lake Placid North Facility Study review meeting with DEF:

6.3.1.1 A Geotech study is required for any new dead-ends.

6.3.2 Protection & Control

6.3.2.1 Add a SEL-735 Power Quality Meter to the LKPN Substation P&C package (also see Section 6.3.3.3.4 below).

6.3.3 Metering / SCADA

6.3.3.1 Lake Placid North TSCADA communicates with ECC through a DAQ Calisto via a 4-wire telecommunication link. The LKPN Solar Line protection IEDs can communicate with TSCADA through the existing system.

6.3.3.1.1 A new data card (node) should be installed in the transmission DAQ RTU. This will allow isolation between the solar customer and Lake Placid North IEDs on the input side. No IP upgrades are included in the facility study (Attachment 13.1).

6.3.3.2 A combination instrument transformer can be installed in the LKPN solar connection if it meets the criteria provided in Attachment 13.2, i.e., the combination unit is a high accuracy extended range unit with an accuracy of 1% rated current.

6.3.3.3 The following inputs were conveyed during the June 21, 2018 Lake Placid North Facility Study review meeting with DEF:

6.3.3.3.1 The solar customer's revenue data as described under reference 14.1 can be transmitted through Lake Placid North's DSCADA.

6.3.3.3.2 The solar customer's revenue meters should be installed in the LKPN substation control equipment enclosure.

6.3.3.3.3 The PMU current transformer input should be included off the SEL-411L relay's current transformer inputs.

6.3.3.3.4 The SEL-735 Power Quality Meter should utilize protection instrument transformers.

6.3.3.3.5 A line relay can be used to transfer the 52-T1 breaker status (see Attachment 13.3 for location of 52-T1).

7.0 CONCEPTUAL DESIGN

7.1 Substation Physical Design

7.1.1 Circuit Breaker Selection

The standard plate for a 69kV SF6 breaker is 3000A, 40kA (Plate 470M5030). The standard breaker plate envelopes the continuous current and available short circuit current of the Lake Placid North Solar Facility (Section 6.1.1.1). Cost estimates have been developed using the standard 3000 A breaker plate.

7.1.2 Lake Placid North Solar Line Terminal

The following is detailed in Figure 2 and estimated in Section 11.1.

7.1.2.1 The Lake Placid North Solar Line will be connected through a single breaker terminal off LKPN 69 kV Bus #1. The line will be terminated at a new 69 kV dead-end modified to accommodate 3000 A disconnect switches on the line side with 69kV surge arrestors hung from under the switch stand of the structure.

7.1.2.2 Three single phase combination instrument transformers will be installed at the center-line of the dead-end structure on a single three phase support structure. The instrument transformers specified under the conceptual details and Section 11.1 meet the specifications of Section 6.3.3.2.

7.1.2.3 Three single phase potential transformers will be installed at the line end of the dead-end on a single three phase support structure.

7.1.2.4 The breaker of 7.1.1 will be installed on the west end of the dead-end structure between a bus support and 3000 A disconnect structure.

7.1.2.5 The existing LKPN Bus #1 will be extended to the breaker disconnect structure west of the breaker.

7.1.2.6 To facilitate the installation of the solar line breaker terminal, the substation's east fence will need to be moved out. Sheets 1 and 2 of Figure 3 detail the fence move dimensions.

7.1.3 Desoto Line

As described in Section 6.1.2.1 of this study, the protection system should be designed to prevent cascading failures from affecting other protection zones (systems). The Desoto line terminates at an interrupting switch on the high side of Transformer #1 (Ref. 14.15). The Desoto Line and LKPN Bus #1 are the protection zone with no breaker separating them. A Desoto Line fault would cascade to the coincident removal of the Lake Placid North Solar Line. The line and bus will be separated into two zones by placing a breaker between them (see Figure 6).

The following is detailed in Figure 2 and estimated in Section 11.2.

7.1.3.1 The Desoto Line will be connected through a single breaker terminal off 69 kV Bus #1. The line is terminated at an existing 69 kV dead-end. The dead-end will be reconfigured to include 3000 A disconnect switches on the line side with 69kV surge arrestors installed on the switch stand of the structure.

7.1.3.2 The breaker of 7.1.1 will be installed at the centerline of the dead-end structure.

7.1.3.3 The breaker will utilize the existing motor operated disconnect switch on the bus side of the breaker. The motor operater will be removed from service.

7.1.3.4 Three protection & control potential transformers will be installed on the line side of the breaker.

7.2 Protection & Control

7.2.1 The protection and control single line diagram is provided in Figure 5. The facility study adds the following new panels:

- Lake Placid North Solar Line Panel (LPD1)
- Desoto Line Panel (LPD1)
- Lake Placid North 69 kV Bus #1 Differential Panel
- Lake Placid North Solar Metering Panel (see Section 7.2.5)
- Lake Placid Non-Controlled GPS Clock

As indicated in Ref. 14.8, there are positions for three spare panels in the control equipment enclosure; the spare panel locations were verified by walkdown. Removing the 100 AH battery along the southwest corner will allocate space for a new panel. In addition, panel space is available in the new battery CEE discussed in Section 7.2.6.2.

7.2.2 Lake Placid North Solar Line Terminal

7.2.2.1 The Lake Placid North Solar line will be protected with two direct fiber pilot differential schemes; DEF Standard LPD1. The tap off LKPN Bus #1 is a single line breaker terminal, therefore the LPD1 standard will be modified.

7.2.2.1.1 Panel CU# 636401 is used as a template for the installation with two line differential relays (SEL-311L and SEL-411L), one breaker control relay (SEL-351S), one power quality meter (SEL-735), and one PMU (SEL-351A).

7.2.2.1.2 CU # 636401 and standard LPD1 will be modified to

- Remove breaker failure from the SEL-351S function
- Remove the MOS SEL-351S control,
- Add two Electro-switch lock outs, one for each line current differential relay. Each lock-out will provide trip and lock-out of the DEF side breaker only and will not initiate transfer trip to the LKPN Solar Breaker.
- Remove the breaker failure lock-out.
- Add PMU and power quality IEDs.

7.2.2.1.3 Each line current differential relay will initiate transfer trip to the other end of the line through their respective direct fiber optic communication links.

7.2.2.2 The new LKPN Solar Line Panel will be installed in a spare position in the relay control house (Ref. 14.8).

7.2.3 Desoto Line Terminal

NOTE: The existing Desoto line protective relay SEL-311C can be reused by reconfiguring its current transformer inputs to those off the Desoto Line breaker. In doing so the protection zone would be pulled back from LKPN

69 kV Bus #1 and the number of new panels would be reduced from four to three. This option would require a breaker control relay (SEL-351S) to be installed in Panel 1 with the SEL-311C relay.

A new panel constructed under standard LPD1 is conservatively applied and included in the cost estimate of Section 11.3.

7.2.3.1 The Desoto line protection will be pulled back to the new line breaker. The SEL-311C relay will be replaced with two line relays under DEF Standard LPD1. The tap off LKPN 69 kV Bus #1 is a single line breaker terminal, therefore the LPD1 standard will be modified.

7.2.3.1.1 Panel CU# 636401 is used as a template for the installation with two line relays (SEL-311L and SEL-411L), and one breaker control relay (SEL-351S).

7.2.3.1.2 CU # 636401 and standard LPD1 will be modified to

- Remove breaker failure from the SEL-351A function
- Remove the MOS SEL-351S control.
- Remove the breaker failure lock-out.

7.2.3.1.3 The Desoto Line relay SEL-311C will be decommissioned and removed in Panel 1.

7.2.3.1.4 Desoto Line control of MOS-6156 will be removed from relay SEL-351S in Panel 1. The relay will be maintained as control for the Lake Placid MOS-6160.

7.2.4 Lake Placid North 69 kV Bus #1 Differential

With the installation of the Desoto and LKPN Solar Line breakers, the 69 kV Bus #1 will be protected in a bus differential scheme.

7.2.4.1 Panel CU# 636423 is used as a template for the installation with one bus differential relay (SEL-487B) and one bus lockout relay. The panel standard, BPD2-P1 will have the breaker control relay (SEL-351S) removed.

7.2.5 Metering / SCADA

This section will segregate data communications into two parts; the first will be LKPN Solar Metering and data and the second will be LKPN Desoto Line and 69 kV Bus #1 differential TSCADA. This will allow facilitating the design input of Section 6.3.3.1.

7.2.5.1 Lake Placid North Solar Revenue Meter and Data (Figure 6 sheet 2)

7.2.5.1.1 JEMStar II revenue meters (qty. 2) will be installed in the new LKPN Solar panel. The JEMStar II units will meter NET Power at the delivery point, that is, the point of interconnection.

7.2.5.1.2 Each meter will be connected to DSCADA through a DNP/IP connection. The meters will be directly connected through a

new non-control TCOMM Ethernet/IP switch (design input 6.3.3.3.1) installed in TCOMM Panel 6.

7.2.5.1.3 The existing TSCADA RTU (DAQ Calisto) will have an additional Serial Processing Module (IoET1) added to it (design input 6.3.3.1).

7.2.5.1.4 The LKPN Solar Line IEDs will be connected to the new IoET1 card through a networked RS-485 string.

7.2.5.1.5 A SEL-2240 Axion Chassis with RTAC, power coupler, and analog input module will be installed. The Axion will be used as an analog input multiplexor to transmit substation terminal voltage and frequency to the RTAC installed in the solar plant (design input 6.2.3.1). The Axion and solar plant RTAC will communicate over a fiber optic EtherCAT link.

- As indicated in Figure 5, the metering combination instrument transformer is provided as an input to the solar plant's inverters. Since the input to the solar inverter controllers are a feedback loop (control) the voltage and frequency input may be taken off the protection potential transformers (see Figure 5). In this case the voltage could be transmitted from one of the line relays to its respective facility line relay and the Axion could be removed from the conceptual.

7.2.5.1.6 The SEL Axion is not intended for connection to TSCADA/DSCADA.

7.2.5.2 Lake Placid North Protection IEDs

7.2.5.2.1 Protection IEDs not associated with the LKPN Solar Line will be connected through an existing (or new) RS-485 string. They will be connected to an existing IoET1 card.

7.2.6 Battery Loading

7.2.6.1 The latest "Battery Charger & Sizing" calculation template was used to determine battery capacity. The battery spreadsheet included the following:

7.2.6.1.1 An existing continuous current load of 1.5 A, as determined by a June 20, 2018 field walkdown,

7.2.6.1.2 A 1.05 design margin,

7.2.6.1.3 The added continuous load of the five new panels described above,

7.2.6.1.4 The expected future load additions of the Serial to Internet Protocol (STIP) upgrades,

7.2.6.1.5 The transfer of TCOMM battery loading to 125 Vdc, and

7.2.6.1.6 The existing worst momentary load for a 13kV Bus #2 Differential actuation. The breaker trip coil amperes far exceed any new 69 kV breaker; therefore, the existing worst-case analysis was maintained.

7.2.6.2 The Lake Placid North 100 AH battery will be replaced with a 270 AH battery.

7.2.6.2.1 The new battery will be installed in a 12 ft. x 30 ft. battery control equipment enclosure located on the south end of the existing CEE.

7.2.6.2.2 Battery estimates are provided based on a 270 AH battery installed in a two-tier 11-foot rack and a 12 ft. x 30 ft. battery CEE.

7.2.6.2.3 The battery CEE is oversized and will accommodate additional future panels.

8.0 EQUIPMENT (MAJOR) LISTING

8.1 Circuit Breaker (LKPN Solar and Desoto)

The Duke Energy Florida Standard Plate envelopes the system load, maximum fault level, required BIL rating, and interrupting time. The listed breaker is

- Breaker, 69 kV, 3000A, 40kA, 470M5030 (QTY-1)

8.2 Combination Instrument Transformers (LKPN Solar)

- 72.5 kV ABB Type KXM-350, 200/5 high accuracy 0.15 B1.8 (QTY-3)

8.3 Protection & Control Potential Transformers (LKPN Solar and Desoto)

- 69 kV potential transformer, single-phase, 100M5000 (0000284402)

8.4 New Panels

- Desoto Line (LPD1) CU# 636401 Panel
- LKPN Solar Line (modified LPD1) CU# 636401 Panel
- LKPN 69kV Bus # 1 (modified BPB2-P1) CU# 636446 Panel
- LKPN Solar Meter Panel
- LKPN Non-Controlled Network GPS Clock Panel

8.5 Battery Control Equipment Enclosure 12 ft. x 30 ft.

9.0 ENGINEERING

9.1 Project and Quality Control Costs

All engineering packages are based on a three tiered P&C and Substation design deliverable milestone schedule. Built into the milestone schedules are

9.1.1 Bi-weekly and technical interface project meetings,

9.1.2 Review and challenge of each milestone package, and

9.1.3 Travel & living expenses for meetings and walk downs.

9.2 Substation Physical

The engineering cost estimate includes the following:

9.2.1 Development of standard 312, 630, and 635 milestone packages,

9.2.2 Engineering drawings based on standard milestones,

9.2.3 Dead-end and breaker foundation design and installation details (noting the battery CEE is estimated separately),

9.2.4 Engineering support for permitting associated with the east fence move, and

9.2.5 Subsurface conduit and/or trough installation, fence expansion, ground grid expansion, and development of bill of material.

9.3 Protection & Control / Metering

It is noted that each facility interconnection will reflect some permutation from the existing DEF design templates. Panel template connections will reflect changes on a per substation basis. This approach has been estimated as non-standard designs. The engineering cost estimate includes the following:

9.3.1 Development of standard 320, 430, and 640 milestone packages,

9.3.2 Engineering drawings based on standard milestone schedule,

9.3.3 Battery capacity increase from 100 AH to 150 AH or 200 AH, and

9.3.4 Relay settings of all new and affected zones.

9.4 Battery Control Equipment Enclosure

9.4.1 Engineering cost associated with the installation of a new battery enclosure is estimated to support permitting, foundation design, and drawing updates.

9.4.2 Considering the non-standard design of the building, additional cost was added to address engineering design and specification of the building.

9.5 Tabulated cost estimates for engineering are as follows:

Engineering Section Estimate	Cost
Substation Physical	$ 159,000
Protection & Control / Metering	$ 221,063
Battery Control Equipment Enclosure	$44,167
Civil Design (Fence/CEE/Interconnect with existing CEE)	$30,500
Total	$454,730

10.0 CONSTRUCTION

10.1 Substation Physical & P&C Installation

10.1.1 East Fence Expansion

Task Description	
Clearing & grubbing 20 citrus trees	$6,000
Topsoil excavation	$5,000
Rework/Compact in situ solid, incl. Geoweb paths	$18,000
Placement of 6 in. granite stone	$5,000
Erect substation security fence	$9,000

Total	$43,000

10.1.2 Labor Construction Costs

Task Description	
Civil Construction	
1 week for breaker foundations/3 weeks for CEE addition	$218,000
Civil Construction Inspection & management	$37,500
Structural Labor	
6 weeks / 6 man crew	327,000
P&C Construction	
2 Technicians / 2 wireman	$280,000
Surveys, Permitting	$13,000
Fence Labor Cost	$43,000
Incidental Labor (TCOMM, etc…)	$7000
Drawing As-Built	$20,000
Project Management	$11,400
Material Freight and Loading	$73,024
Capital and Admin Allocations	$404,884
Total	$1,422,308

10.1.3 Battery CEE Installation Cost (Manufacturer)

Task Description	
Transportation	$15,564
Crane Offload	$8,922
Field Setup	$7,925
Total	$32,411

11.0 COST ESTIMATE

11.1 LKPN Solar Point of Interconnection

3000 A, 40kA Lake Placid North Solar Terminal (Single Breaker)

Material Cost	DEF Standard Plate	Cost (note 2)
Breaker, 69 kV, 3000A, 40kA	470M5030 (qty-1)	$77,975
69kV Dead-End Tower, 3000 A Bypass Switch	010M5020 (qty-1)	$81,448
3-1ϕ Potential Transformers Single-Leg Support	102M5005 (qty-1)	$28,977
Surge Arrestors	9220244590 (qty-3)	$2,958
Combination Instrument Transformers	ABB KXM-350 (QTY-3)	$42,000
3-1ϕ Single-Leg Support	102M5005 (qty-1) Note 1	$15,768
69kB Bus Support Low Profile	055M5000 (qty-1)	$7,799
	Total	$256,925

11.2 3000 A, 40kA Desoto City Terminal (Single Breaker)

Material Cost	DEF Standard Plate	Cost (note 2)
Breaker, 69 kV, 3000A, 40kA	470M5030 (qty-1)	$77,975
Switches, Vertical Break, 3000 A	585M5030 (qty-3)	$57,845
3-1ϕ Potential Transformers Single-Leg Support	102M5005 (qty-1)	$28,968
Surge Arrestors	9220244590 (qty-3)	$2,958
	Total	$167,746

Notes:

1. Design plate 102M5005 is used to estimate the combination transformer support. The support total plate cost is used minus the potential transformer cost.
2. All “Apparatus Labor Standards” have been increased by a factor of 3.

11.3 Protection and Control

LPD1 - Desoto City Line / LKPN Solar

Material Cost	CU Panel No.	Cost
LPD1, Single Panel Dual Line Protections - Desoto	636401	$36,987
LPD1, Single Panel Dual Line Protections – LKPN Solar	636401	$36,987
BPD1, Single Bus Differential, SEL-487B	636423	$17,398
Incidentals (cable, terminations, field supports, etc…)		$20,000
	Total	$111,372

11.4 Metering and Telecommunications

Material Cost	CU Panel No.	Cost
Single Solar Facility Panel (Revenue/PWR Quality/Axion)		$8,000
Non-Controlled GPS Clock Panel	636433	$8,999
LKPN Solar OPGW Transition Box & Fiber		$4,000
	Total	$20,999

11.5 125 Vdc / 150 AH Battery

Material Cost		Cost
Battery, 270 AH, EnerSys EC-7		$20,070
Battery Rack, Two-tier, 11 ft.		$426
Battery Charger		$4,851
	Total	$25,347

11.6 Battery Control Equipment Enclosure

Material Cost		Cost
Prefabbed Building, 15 ft. 25 ft.		$76,850
Contingency Cost		$25,000
Prefab Manufacturer Transport/Field Cost		$32,411
	Total	$134,261

1. A contingency cost has been added to account for modifications in size and equipment from the conceptualized estimate used.

11.7 Total Facility Study Tabulated Values

11.7.1 Tabulation of material, engineering, construction cost:

Material Cost		Cost
LKPN Solar Point of Interconnection		$256,925
3000 A, 40kA Desoto City Terminal (Single Breaker)		$167,746
Battery CEE		$101,850
	Total Substation	$526,521
Protection and Control		$111,372
Metering and Telecommunications		$20,999
125 Vdc / 150 AH Battery		$25,347
	Total P&C	$157,718
	Total Substation and P&C	$684,239
Engineering Cost		$454,730
	Total Cost	$1,138,969

11.8 Total Values Extracted From Estimation Spreadsheet

Total Facility Study Tabulated Values Section 11.7.1		$1,138,969
Labor and Allocations[1]		$1,422,308
Contingency[1]		$514,756
	Total Cost	$3,076,033

1. Provided from DEF estimation spreadsheet.

12.0 FIGURES

12.1 Figure 1, Lake Placid Solar Point of Interconnection

12.2 Figure 2, Drawing S-476-D5, Electrical Plan View Layout Mark-Up

12.3 Figure 3, Sh. 1 & 2, East Fence Line and Move Coincident With Breaker Installation

12.4 Figure 4, S476-999C Protection Zone Diagram

12.5 Figure 5, Single Line Control Diagram 69kV Bus #1

12.6 Figure 6, Conceptual Updated Substation Communication Architecture

12.7 Figure 7, Conceptual CEE Plan

13.0 ATTACHMENTS

13.1 E-mail, 5/18/18 from Hans Jacob, Harvey Zapata, and Zachary Morris

13.2 E-mail, 5/18/18 from Joseph Starnes

13.3 E-101 Preliminary Single Line Diagram

13.4 Milestone Schedule

14.0 REFERENCES

<u>DOCUMENTS and STUDIES</u>

14.1 TECP-EGR-TRM-00053, Rev. 02, Duke Energy Florida Connection Requirements

14.2 System Impact Study [Steady State] Q149 45.0 MW PV Solar Plant, March 2018

14.3 System Impact Study Q149 45.0 MW PV Solar Plant Transient Stability Study, March 2018

<u>DRAWINGS</u>

14.4 04760101, Three Line Diagram Lake Placid North Substation

14.5 S476-001D, Switchboard Plan View

14.6 S-476-D3, General Layout Lake Placid North

14.7 S-476-D5, Electrical Plan View Layout Lake Placid North

14.8 S476-009D, Lake Placid North Relay Vault Left Layout 20 x 24

14.9 S-476-D7, Conduit Layout Lake Placid North

14.10 S-476-D6, Cable Trench Layout

14.11 S-476-D4, Foundation and Fence Layout Lake Placid North

14.12 S-476-D101, Clear, Grade & Fill Layout Lake Placid North

14.13 S-476-D102, Access Drive layout Lake Placid North

14.14 S-476-D102, GEOWEB Location Layout Lake Placid North

14.15 S476-002D, Single Line Control Diagram 69/13kV Transformer #1

STANDARDS

14.16 Duke Design & Construction Practices Manual

14.17 Duke Substation Standards Design Plate Catalog

Facilities Study Approval

Approval Signatures:

Christian Robles
Manager, Substation Engineering
on behalf of Ray Desouza

Ray DeSouza
Director, Transmission Engineering

Ed Scott
Director, Transmission Planning

Activty	Date
Interconnection Agreement Executed	LGIA
Intiate Request for Proposal	LGIA + 2 weeks
Contract Award	LGIA + 24 weeks
Permitting	LGIA + 55 weeks
Line Engineering	LGIA + 44 weeks
Civil Engineering	LGIA + 60 weeks
Substation Physical Engineering	LGIA + 60 weeks
Protection and Control Engineering	LGIA + 64 weeks
Line Construction	LGIA + 92 weeks
Civil/Control Equipment Enclosure Construction	LGIA + 103 weeks
Substation Physical Construction	LGIA + 100 weeks
Protection and Control Construction	LGIA + 102 weeks
Ready for Backfeed	LGIA + 96 weeks
In-Service	LGIA + 104 weeks

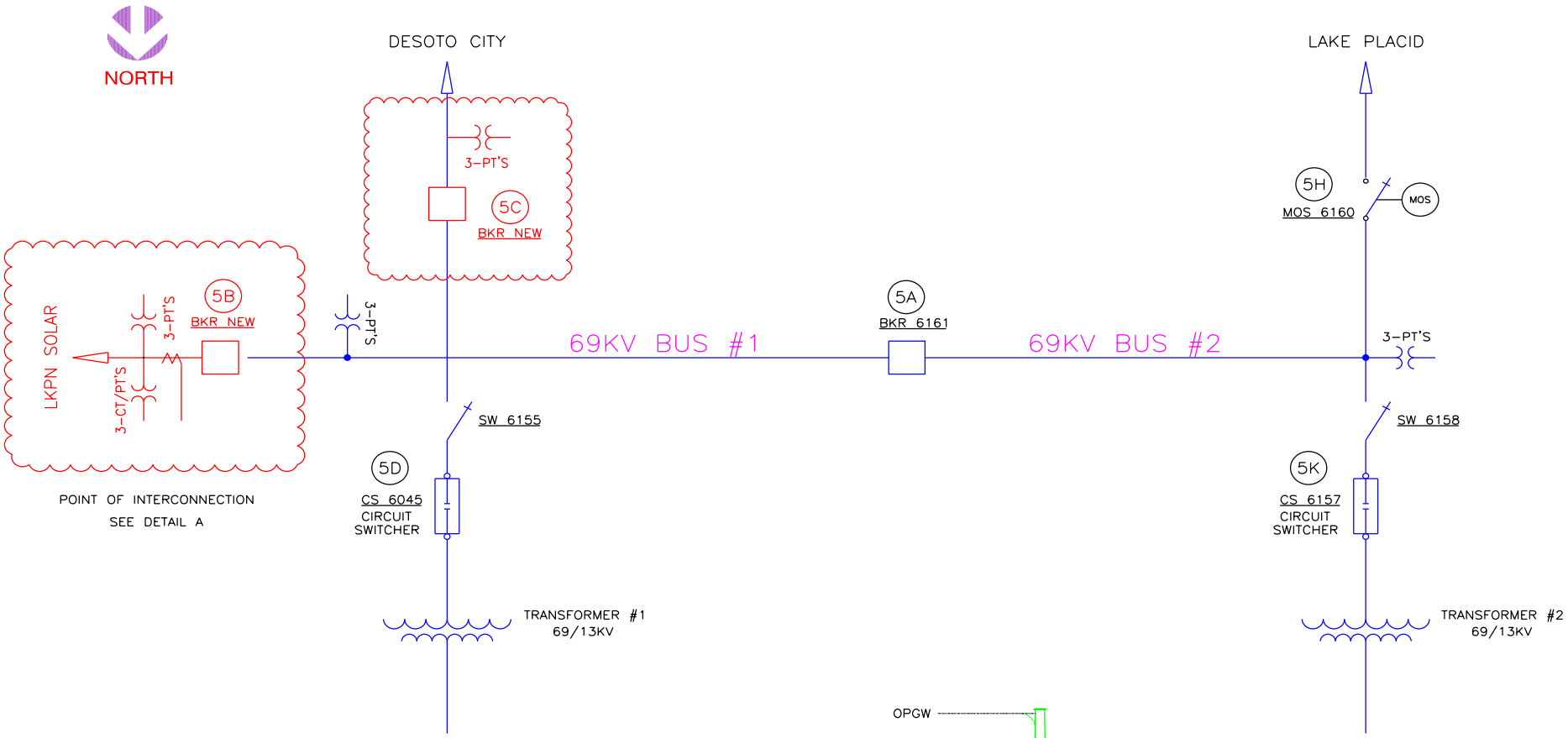

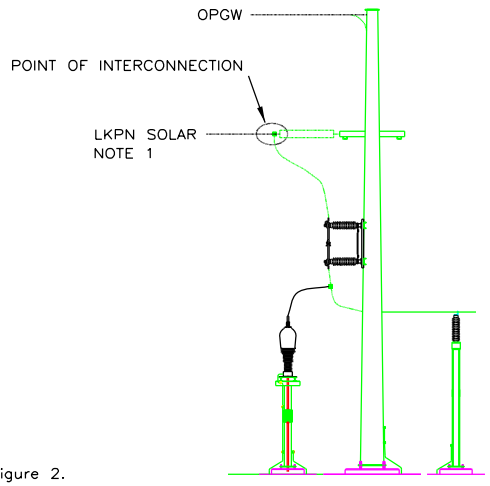

DETAIL A
NOTE 2

NOTES:

1. Attachment 13.3, E-101 Florida Solar and Power Group Conceptual One-Line.
2. Detail does not show combination instrument transformer. For combination unit see Figure 2.

Q149 FACILITY STUDY
FIGURE 1

NTS | SH. 1 of 1

Q149 FACILITY STUDY
FIGURE 2
SH. 1 OF 1

NORTH

NOTE 1: COMBINATION INSTRUMENT TRANSFORMERS 3-1 PHASE ABB HIGH ACCURACY EXTENDED RANGE KXM-350.

NOTE 2: COMBO UNIT IS INSTALLED ON A 1-LEGGED 3-PHASE SUPPORT. THE COMBO UNIT SUPPORT IS A MODIFIED 102M5005 WITH THE COMBO UNIT'S TERMINAL PAD AT AN ELEVATION OF OF THE BREAKER BUSHING PADS.

NOTE 3: THREE SURGE ARRESTERS (ID 9220244590) UNDERHUNG FROM SWITCH STAND.

NOTE 4: 3-585M5030 3000 A DISCONNECTS MOUNTED ON LINE SIDE.

NOTE 5: 69 KV DEAD END STRUCTURE MODIFIED FROM 005M5020 DETAIL.

NOTE 6: 69 KV STRUCTURE MODIFIED HEIGHT TO ACCOMODATE 3000 A SWITCHES TOP ELEV. 14 FT. 8 IN.

NOTE 7: 69 KV 3000 A SWITCHES CENTER-BREAK ESTIMATED USING VERTICAL BREAK PLATE.

A26 A22 A21 A20 A19 A23, A25 A18 O.H.G. O.H.G. A17 A16 A15 A14 3- 2000/5 CTS 107M5005 A13 A13 A12 A12 A26 A10 A11 A25 A9 A9 A8 A7 A10 A27 A6 A6 A4 A5

065M5020 with 585M5030 3000A SWITCHES NOTES 6

3000A SF6 BREAKER 470M5020

055M5000

0050M5020 NOTES 5

3-69KV SURGE ARRESTORS NOTES 3

3-69KV PTS/102M5005

LAKE PLACID NORTH SOLAR

3-69KV COMBO UNITS NOTES 1 & 2

3-3000A DISCONNECTS NOTES 1 & 2

3000A SF6 BREAKER 470M5030

3-3000A DISCONNECTS 585M5030

3-69KV SURGE ARRESTORS NOTE 3

3-69KV PTS 102M5005

DESOTO CITY

NOTE: ANIMAL MITIGATION INSTALLED ON THE LOW SIDE OF THIS SUBSTATION

NO.	DESCRIPTION	DRAWN	CHKD.	APPR.	DATE
REVISIONS					

DUKE ENERGY.

09/19/08 DATE	1/8"=1' SCALE	SUBSTATION ENGINEERING
GSD DRAWN	GSD TECH	ELECTRICAL PLAN VIEW LAYOUT
CHECK	ENGR	LAKE PLACID NORTH SUBSTATION
1 OF 1 SHEET	DWG.	S-476-D5

Q149 FACILITY STUDY
FIGURE 3
SH. 1 OF 2

NORTH

GRAPHIC SCALE

40 20 0 20

(IN FEET)
1 inch = 40 ft.

GENERAL LAYOUT IS SUPERIMPOSED ON THE BOUNDARY
FOR SURVEY AND LEGAL DESCRIPTION SEE DWG S-47

NOTE:
INDICATES AREA OF CONSTRUC

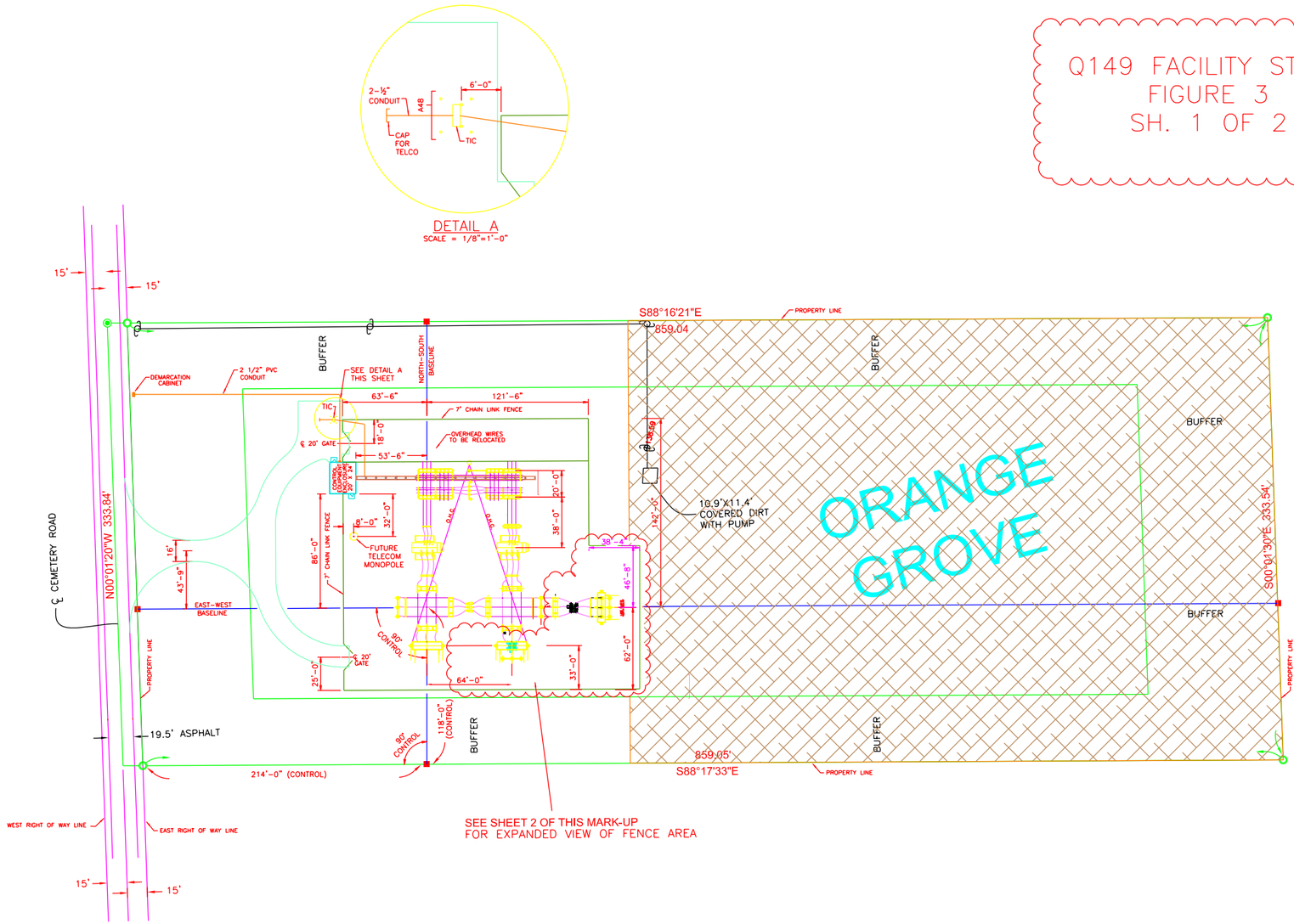

NO.	DESCRIPTION
1	ADDED WC AND FUTURE FIELD WORKING PER DOCKM EMAIL RDJ 06/06/07

REVISION

DU
EN

6/06 DATE	1"=40' SCALE	SUBS
GSD DRAWN	GSD TECH	C
CHECK	DRJ ENGR	LA
1 OF 1 SHEET	DWG.	S-

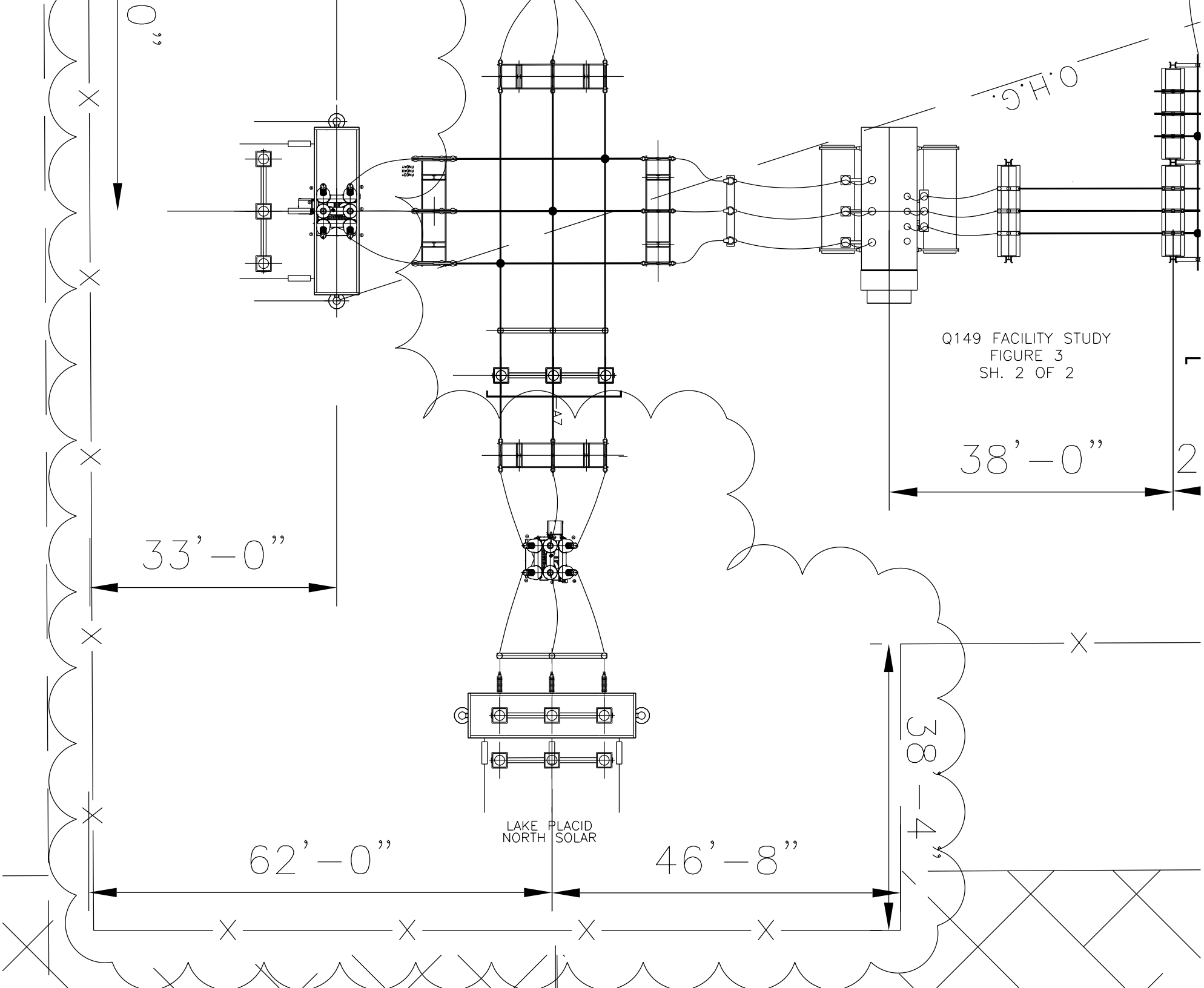

Q149 FACILITY STUDY
FIGURE 3
SH. 2 OF 2

LEGEND

BD1	BUS DIFFERENTIAL 1	GD	GROUND DIFFERENTIAL	OAD	OVERALL DIFFERENTIAL	SP	TR. SUDDEN PRESSURE
BD2	BUS DIFFERENTIAL 2	GOC	GROUND OVERCURRENT	OC	PHASE & GROUND OVERCURRENT	TD1	TRANSF. DIFFERENTIAL 1
BF	BREAKER FAILURE	GP	GENERATOR PROT.	OL	OIL LEVEL	TD2	TRANSF. DIFFERENTIAL 2
BG	BREAKER GROUND	LB	BACKUP LINE PROT. W/O COMM	OV	OVER VOLTAGE	UP	UNIT PROTECTION
BOC	BUS OVERCURRENT	LP	LINE PROT. W/O COMM	PD	POLE DISAGREEMENT	UV	UNDER VOLTAGE
BU*	BACK-UP LINE PROT. W/O COMM	LP1	LINE PROT. PRIMARY 1 W/COMM	POC	PHASE OVERCURRENT	VR	VOLTAGE REGULATOR
FBT	FAST BUS TRIP	LP2	LINE PROT. PRIMARY 2 W/COMM	PRI*	PRIMARY LINE PROT. W/COMM	CTG	CT COLUMN FAILURE
FTT	FAST TRANSFORMER TRIP	LP3	LINE PROT. PRIMARY 3 W/COMM	SEC*	SECONDARY LINE PROT. W/COMM		

*USED TO CONFORM WITH HISTORICAL DESIGN DRAWING PROTECTION LABELS – NOT FOR NEW INSTALLATIONS.

N

FIGURE 4
Q149 FACILITY STUDY

PROTECTION ZONE DIAGRAM
LAKE PLACID
NORTH SUBSTATION

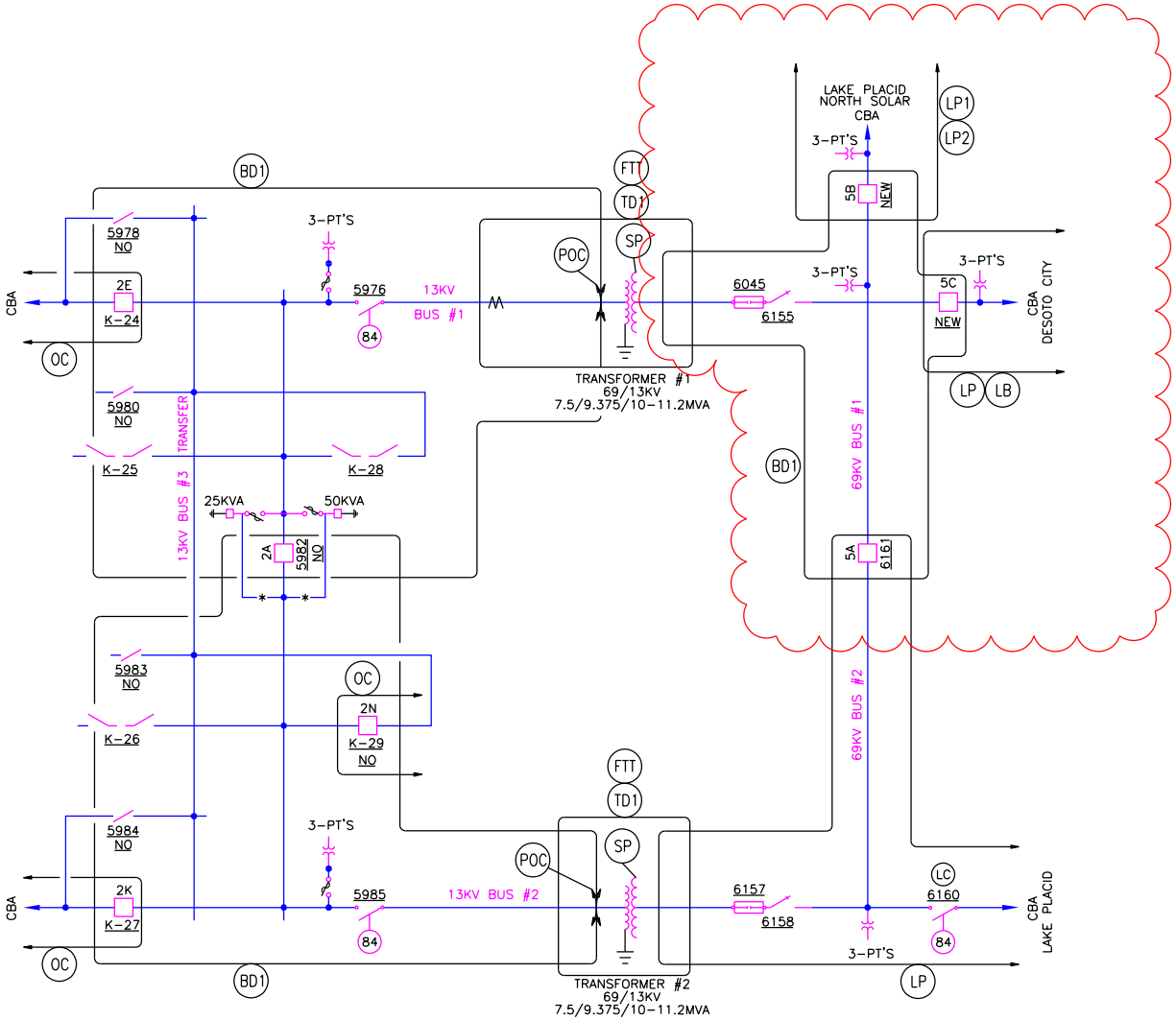

* ALTERNATE STATION SERVICE SOURCE

NO.	DESCRIPTION	DRAWN	CHKD.	APPR.	DATE
2	THOR: N/A STREF: N/A STREV: N/A PZ UPDATED, REDRAWN	ETL	BTS	WP	11/11

REVISIONS

DUKE ENERGY®

12-06 DATE	1" = 1" SCALE	PROTECTION & CONTROL ENG
DCAD DRAWN	TECH	PROTECTION ZONE DIAGRAM
MEC CHECK	AC ENGR	LAKE PLACID NORTH SUBSTATION
1 OF 1 SHEET	DWG.	S476-999C

FIGURE 5
LKPN FACILITY STUDY

RELAY & METERING ONE LINE
69KV BUS #1
LAKE PLACID
NORTH SUBSTATION

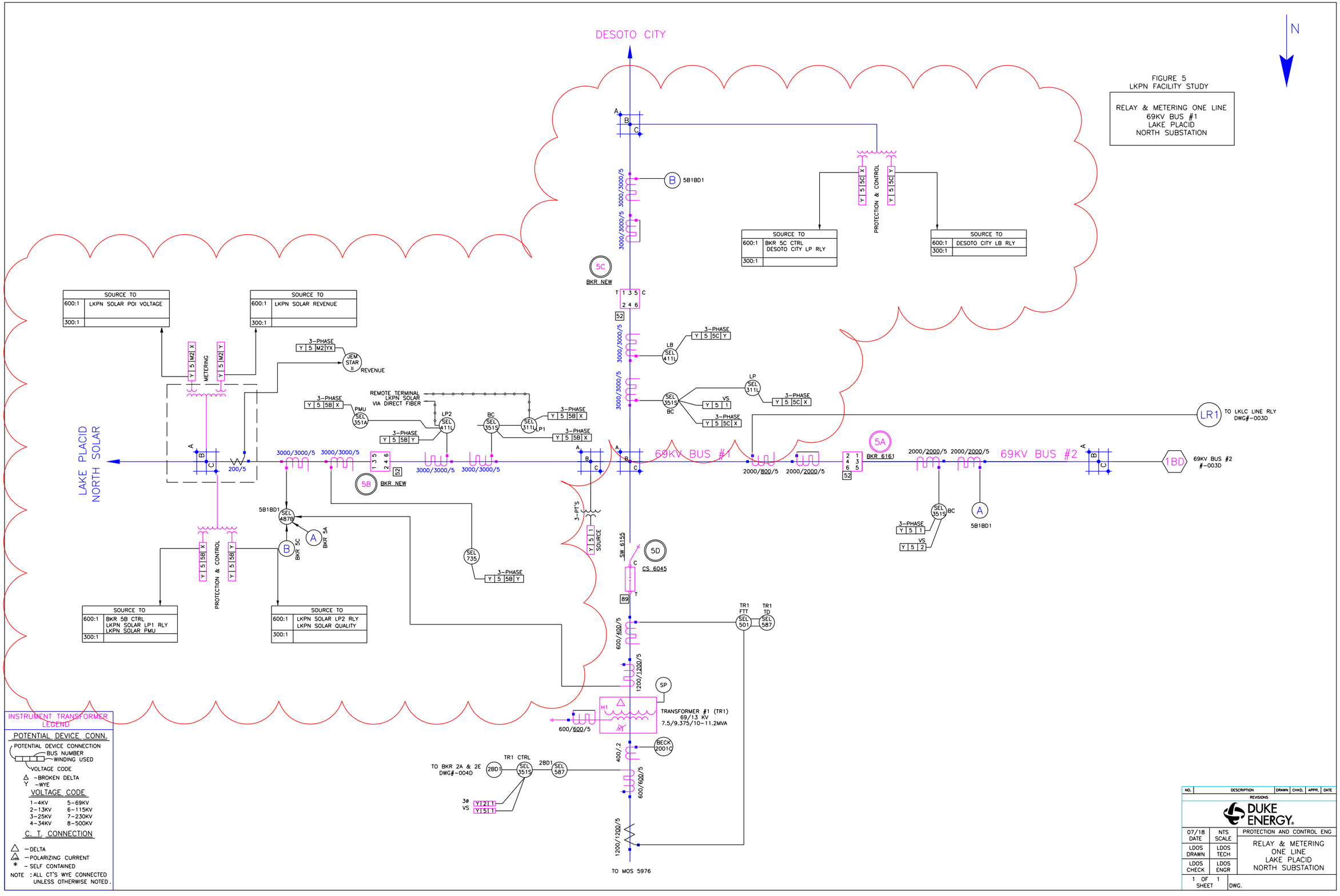

INSTRUMENT TRANSFORMER LEGEND

POTENTIAL DEVICE CONN.

POTENTIAL DEVICE CONNECTION
BUS NUMBER
WINDING USED
VOLTAGE CODE
Δ -BROKEN DELTA
Y -WYE

VOLTAGE CODE

1-4KV	5-69KV
2-13KV	6-115KV
3-25KV	7-230KV
4-34KV	8-500KV

C. T. CONNECTION

△ -DELTA
△ -POLARIZING CURRENT
* - SELF CONTAINED

NOTE : ALL CT'S WYE CONNECTED UNLESS OTHERWISE NOTED.

NO.	DESCRIPTION	DRAWN	CHKD.	APPR.	DATE
	REVISIONS				

DUKE ENERGY.

07/18 DATE	NTS SCALE	PROTECTION AND CONTROL ENG
LDOS DRAWN	LDOS TECH	RELAY & METERING ONE LINE LAKE PLACID NORTH SUBSTATION
LDOS CHECK	LDOS ENGR	
1 OF 1 SHEET	DWG.	

FIGURE 6
Q149 FACILITY STUDY

SUBSTATION COMMUNICATION ARCHITECTURE
LAKE PLACID NORTH SUBSTATION

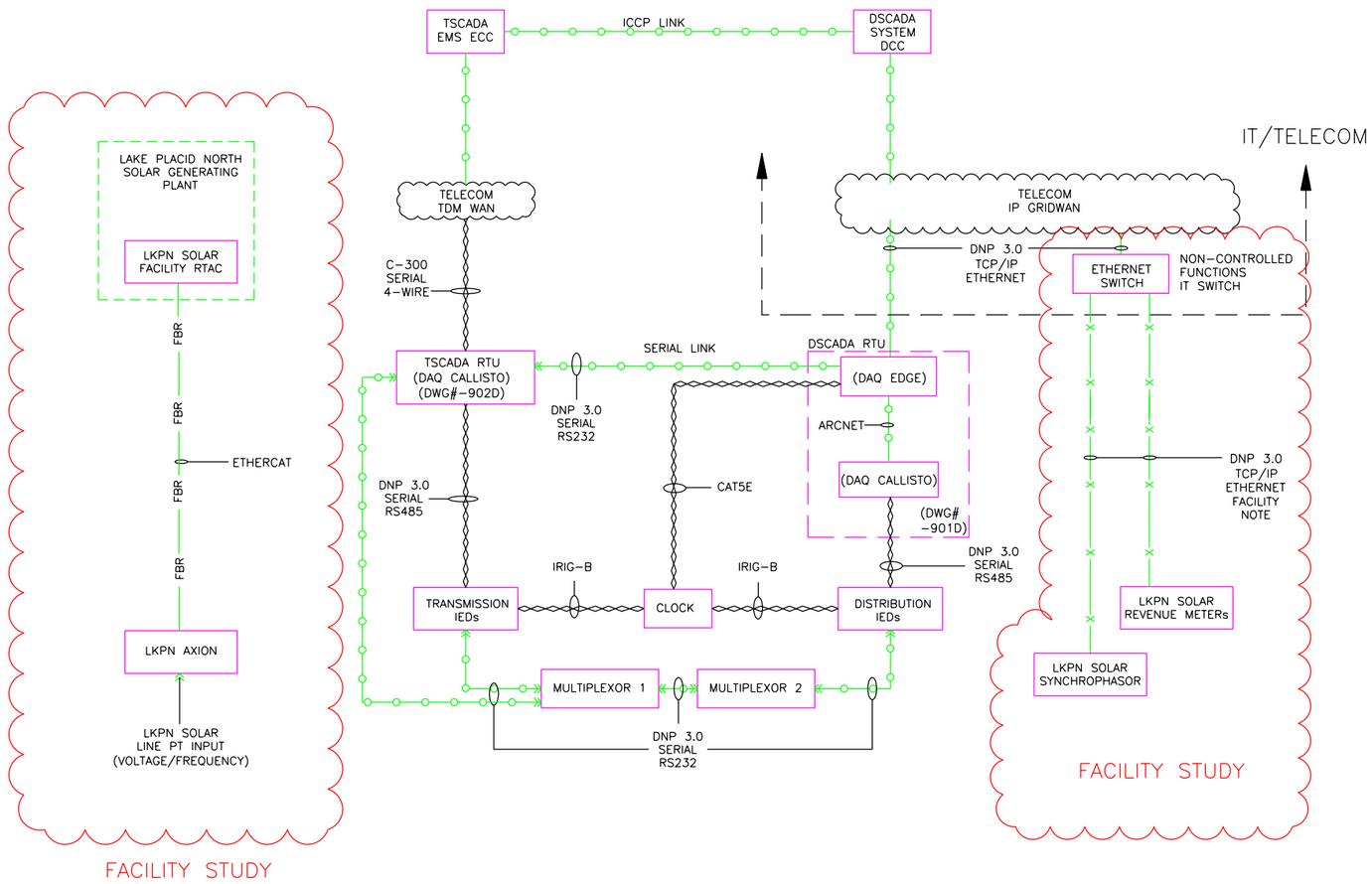

SUBSTATION COMMUNICATION ARCHITECTURE

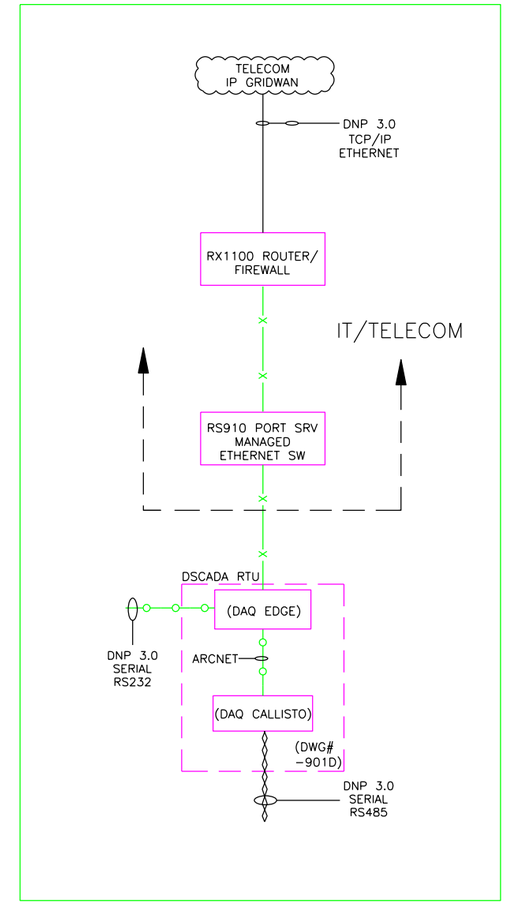

S476-900D
WALKDOWN RECORD

FACILITY STUDY ASSUMPTION:

NON-CONTROLLED NETWORK ETHERNET SWITCH (NEW) TO CONNECT TO RS910 PORT SRV/ETHERNET SWITCH.

FACILITY STUDY NOTE:

FOR REVENUE METERS AND/OR PMU INSTALLED AT THE SOLAR FACILITY THE CONNECTION MEDIUM WILL BE FIBER.

FACILITY STUDY

NO.	DESCRIPTION	DRAWN	CHKD.	APPR.	DATE
1	THOR: SG 20086127 STREF: DSCA2-900D STREV: 1 REMOVED NOT IN SERVICE PHASE B	PEI	PGE	PGE	10-12

REVISIONS

DUKE ENERGY.

5-11 DATE	NTS SCALE	PROTECTION AND CONTROL ENG
PGE DRAWN	PGE TECH	SUBSTATION COMMUNICATION ARCHITECTURE
LMC CHECK	LMC ENGR	LAKE PLACID NORTH SUBSTATION
1 OF 1 SHEET	DWG.	S476-900D

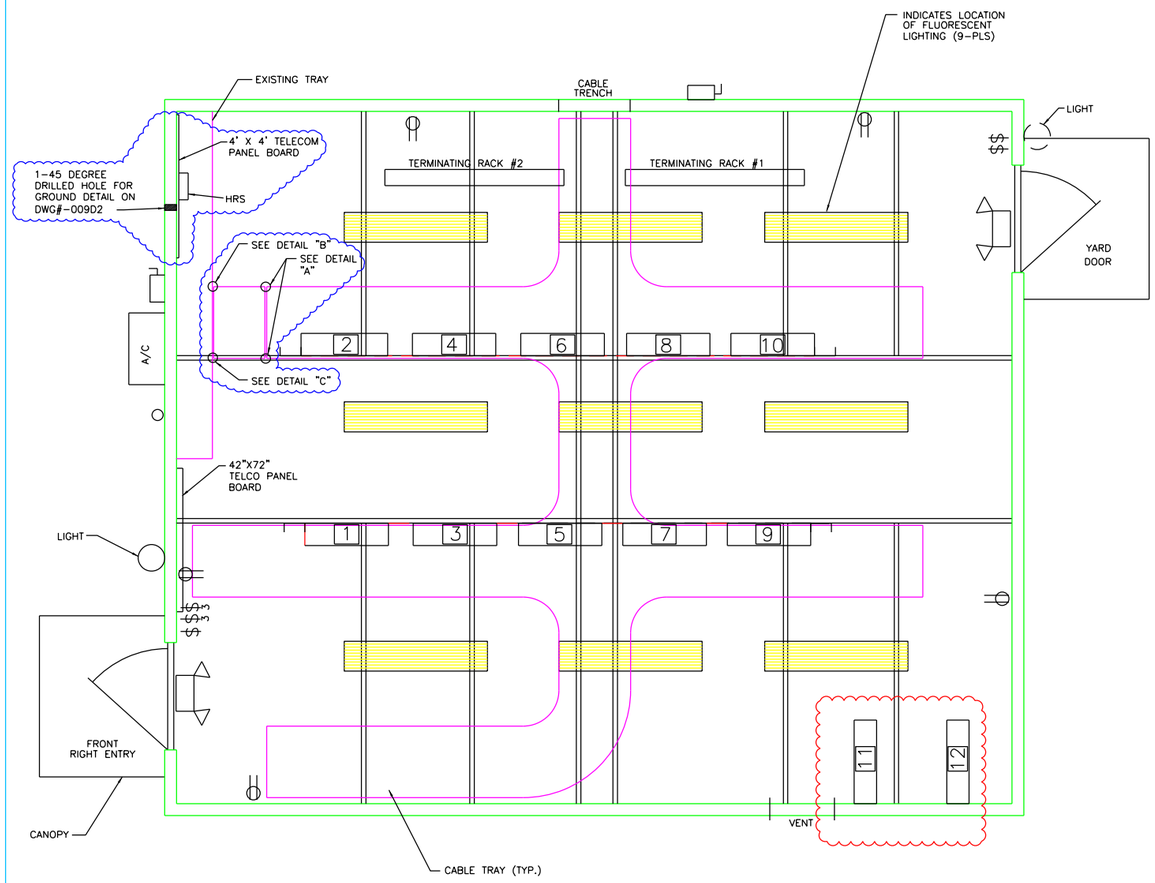

ELECTRICAL & CABLE TRAY SYSTEM

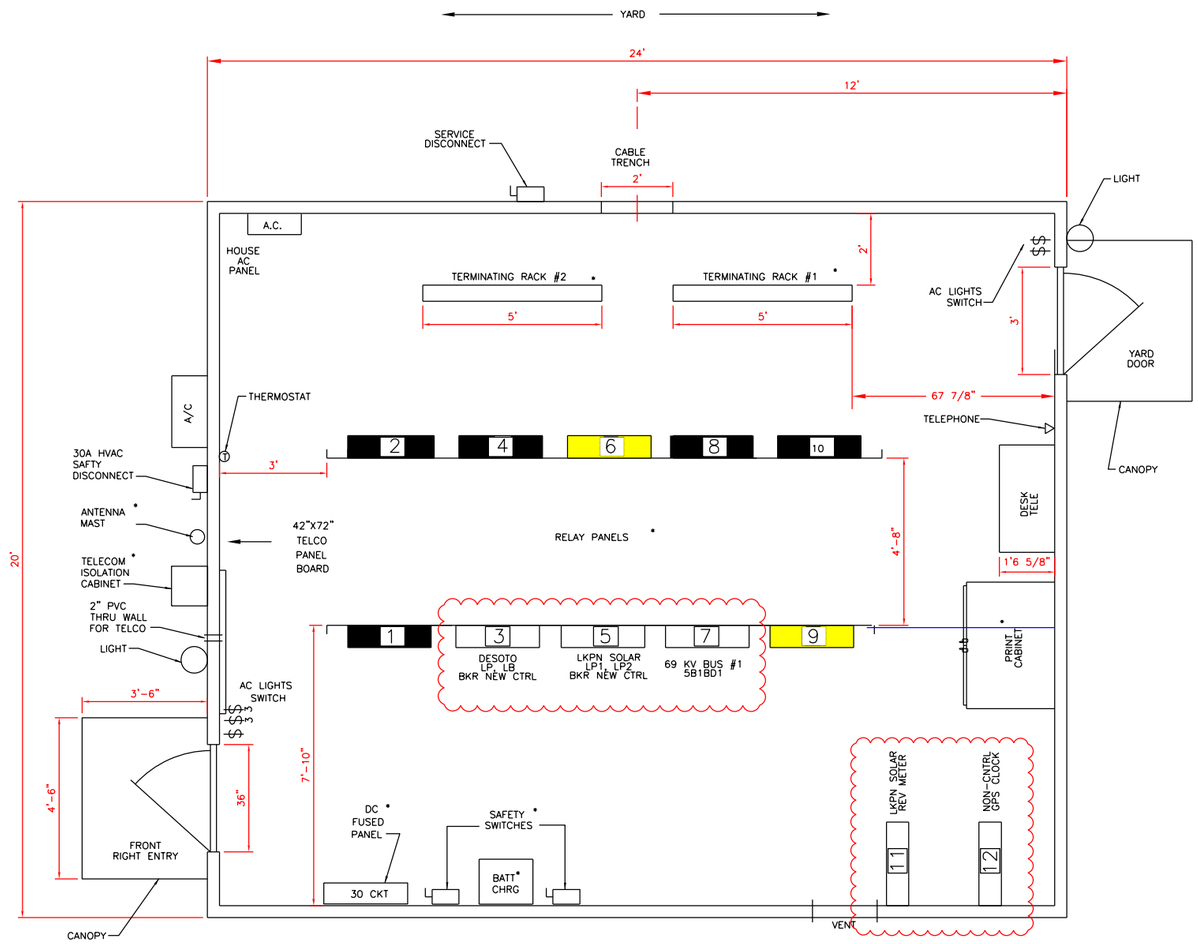

FLOOR PLAN

* INDICATES ITEMS INSTALLED BY PROGRESS ENERGY
SCALE: 1/2"=1'-0"

FIGURE 7
Q149 LKPN FACILITY STUDY

RELAY VAULT
LAYOUT

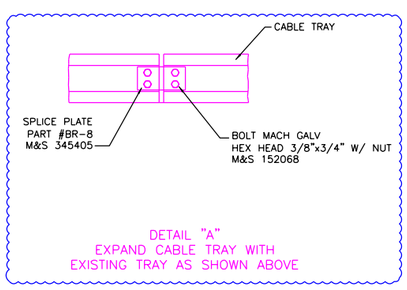

DETAIL "A"
EXPAND CABLE TRAY WITH
EXISTING TRAY AS SHOWN ABOVE

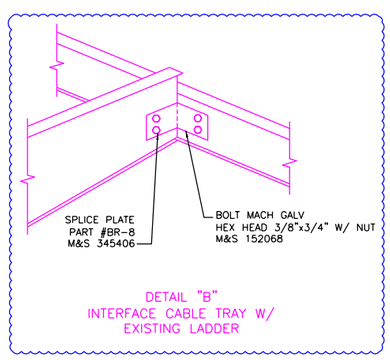

DETAIL "B"
INTERFACE CABLE TRAY W/
EXISTING LADDER

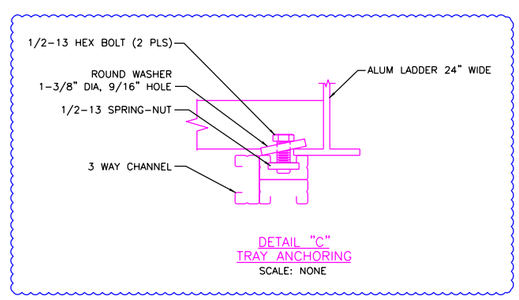

DETAIL "C"
TRAY ANCHORING
SCALE: NONE

PANEL	DESCRIPTION
1	MOS, TIE & L.R.'s
~~2~~	~~TR1 PROTECT. & CONTROL~~
3	DESOTO LINE
~~4~~	~~TR2 PROTECT. & CONTROL~~
5	LPKN SOLAR
~~6~~	~~P&C DSCADA COMMUNICATION~~
7	BUS #1 PROTECT
~~8~~	~~P&C TSCADA COMMUNICATION BUS #1 FEEDERS, LS BUS TIE TRANSFER~~
9	IT & TELECOMMUNICATION
~~10~~	~~BUS #2 FEEDERS~~
11	LKPN SOLAR REVENUE
12	NON-CONTROL GPS

NO.	DESCRIPTION	DRAWN	CHKD.	APPR.	DATE
2	THOR: SG 20086127 STREF: DSCA2-001D STREV: 0 ADD DSCADA RTU, HRS, CABLE TRAY & IT/TELECOM TEP PER DSCADA PHASE A	PEI	PEI	PEI	05-12

REVISIONS

Progress Energy

12-06 DATE	1=24 SCALE	PROTECTION AND CONTROL ENG
DCAD DRAWN	TECH	RELAY VAULT LEFT LAYOUT 20 X 24
MEC CHECK	AC ENGR	LAKE PLACID NORTH SUBSTATION
1 OF 4 SHEET	DWG.	S476-009D

PLOT:1=24

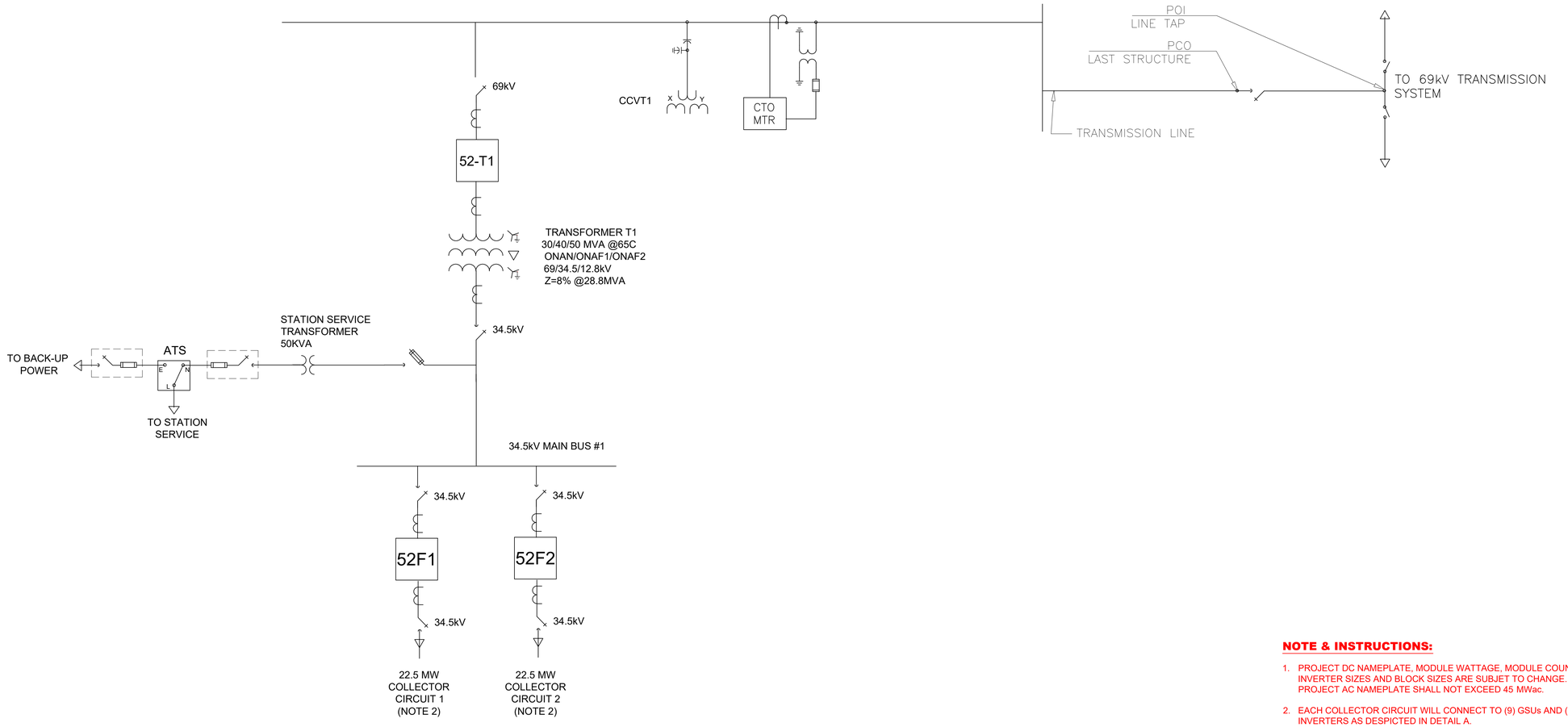

NOTE & INSTRUCTIONS:

1. PROJECT DC NAMEPLATE, MODULE WATTAGE, MODULE COUNT, INVERTER SIZES AND BLOCK SIZES ARE SUBJET TO CHANGE. PROJECT AC NAMEPLATE SHALL NOT EXCEED 45 MWac.
2. EACH COLLECTOR CIRCUIT WILL CONNECT TO (9) GSUs AND (9) INVERTERS AS DESPICTED IN DETAIL A.

DETAIL A:

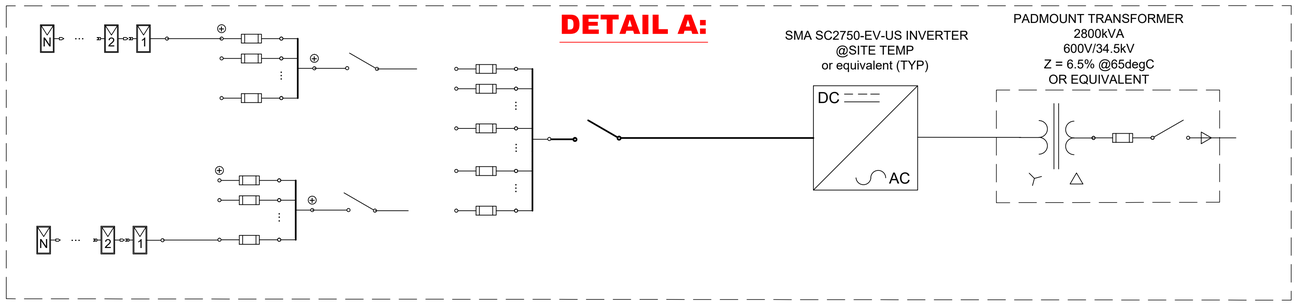

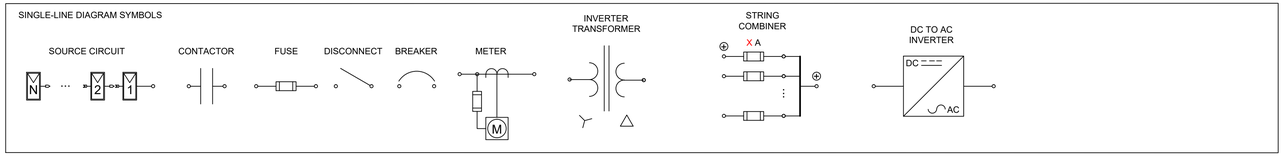

SYSTEM SUMMARY

MODULE TYPE	CS6U-335P
MODULE COUNT	201,420
RACKING TYPE	HORIZONTAL SINGLE-AXIS TRACKER
DC SYSTEM VOLTAGE	1500V Max.
RACKING SYSTEM MODEL	HSAT Ground
DC SYSTEM SIZE	67.48 MWp
AC SYSTEM SIZE	49.5 MW
INTERCONNECTION LIMIT	45 MW
PV INVERTER MODEL	SMA SC2750-EV-US
INVERTER COUNT & RATING	(18) x 2,750 kW PF =1 T=25degC
PADMOUNT TRANSFORMER COUNT & RATING	(18) x 2,800 kVA

CONFIDENTIALITY STATEMENT:

PRELIMINARY NOT FOR CONSTRUCTION

ENGINEER:

PRELIMINARY NOT FOR CONSTRUCTION

REV. NO.	DESCRIPTION	DATE	BY
A	PRELIMINARY	06/18/2018	EG

–FOR INTERNAL USE ONLY –					
DESIGNED BY:	EG	DRAWN BY:	EG	CHECKE BY:	xx
PROJECT #:	.		PRINTED ON:	06/18/2018	
FILE NAME:	Lake Placid_Solar_SLD.dwg		TIME:	–	

NOT FOR CONSTRUCTION

OWNER:

PROJECT SITE:

LAKE PLACID SOLAR
45 MWac

DRAWING:
PRELIMINARY SINGLE-LINE DIAGRAM

DRAWING NO.
E-01