Transmission Coordination and Planning Committee 2014 Q2 Stakeholder Meeting

June 26, 2014

Cheyenne Light
Fuel & Power
Improving life with energy

Agenda

- Introductions
- Transmission Expansion Plan
- 2014 TCPC Study Scope
- Stakeholder Input and Questions

Meeting Objectives

- Plan the expansion of the transmission system to ensure reliable, efficient delivery of energy to customers at a reasonable cost.
- Develop and coordinate plans with interested stakeholders at the local, state, and regional level to identify and address concerns in the early stages of project development.
- Ensure openness and transparency while addressing applicable regulatory requirements.

Transmission Planning

Transmission Planning Process

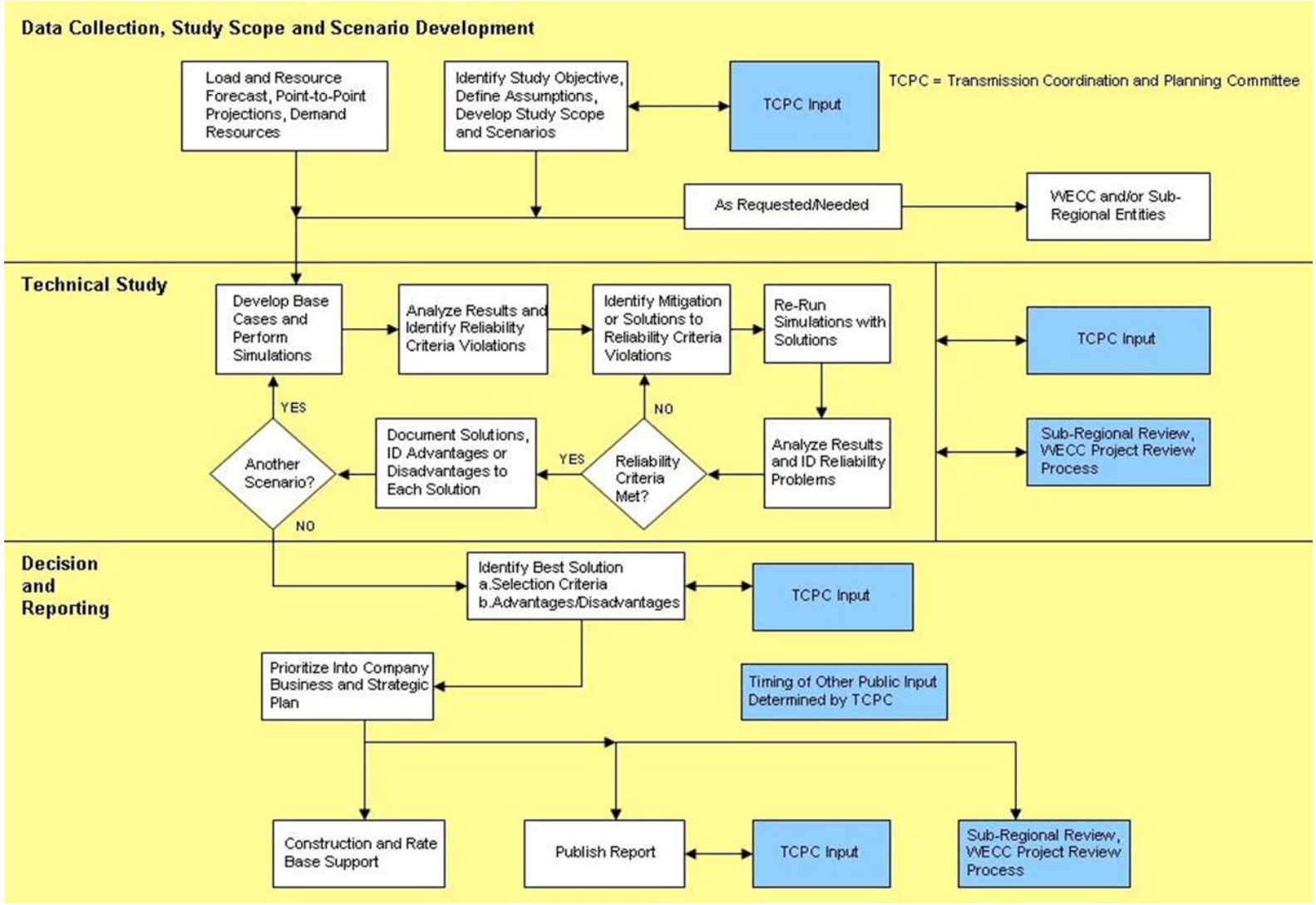

Multi-Year Transmission Plan

PROJECT	ESTIMATED ISD	STATUS
South Cheyenne 115 kV Substation	2014	Planned
North Range 115 kV Substation	2013	In-Service
North Range 115 kV Transmission Line	2013	In-Service
Corlett-South Cheyenne 115 kV Line	2014	Planned
Swan Ranch 115 kV Substation	2015	Planned
North Range-Swan Ranch-South Cheyenne 115 kV Circuit	2014	Planned
Cheyenne Prairie Generation Interconnection	2014	In-Service
Data Center 115 kV Substation and Transmission	2015	Planned
Second South Cheyenne 230/115 kV Transformer	2015	Planned

CLFP Transmission Plan

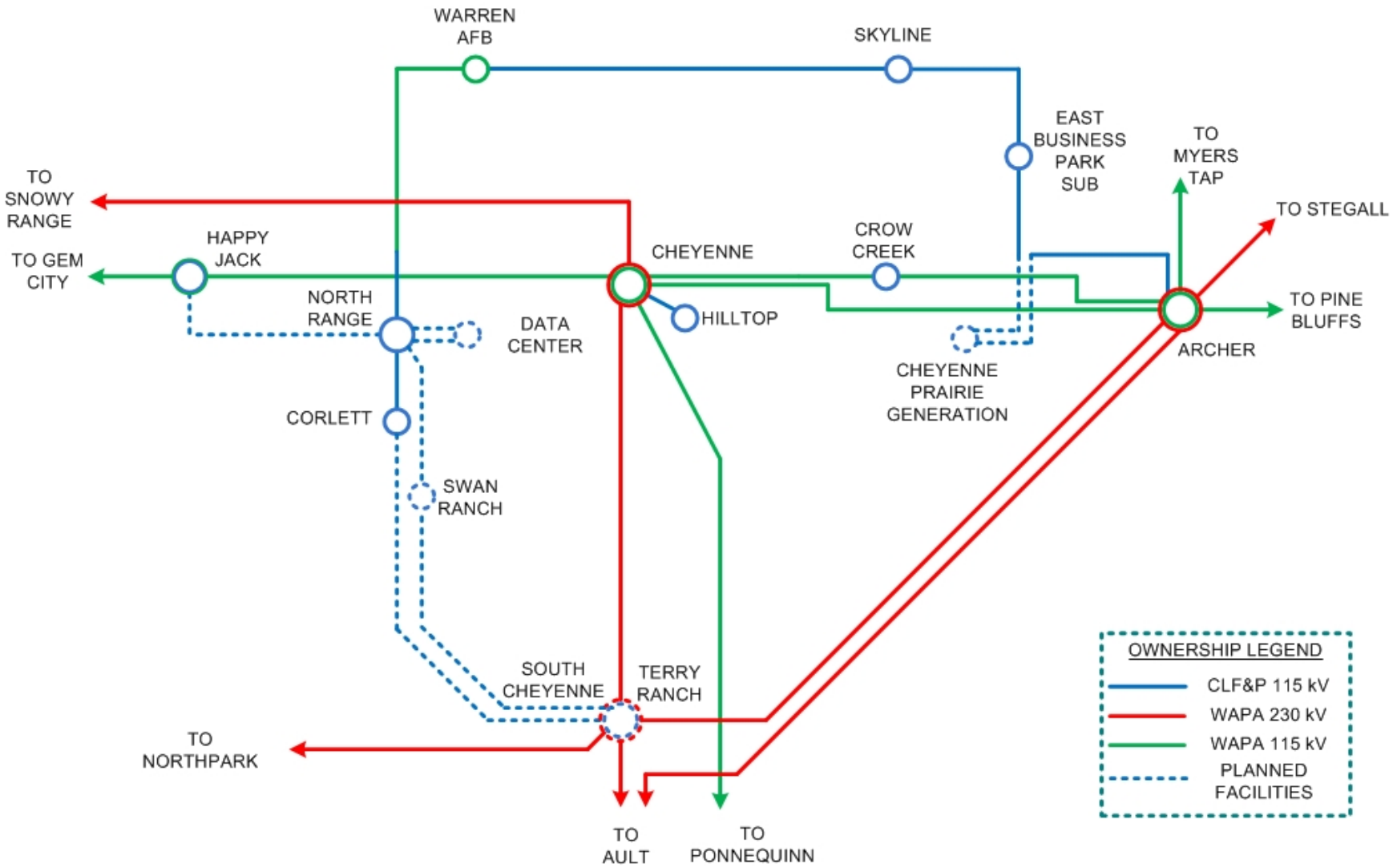

2014 Study Scope: 5 and 10-Year Scenarios

- **2019 Heavy Winter Load**
  - Power flow, transient stability, voltage stability
  - Starting Case: 2014 CCPG Compliance Study
  - CLFP System Demand = 204 MW
  - Warren AFB Demand = 9.8 MW

- **2019 Light Winter Load**
  - High Renewable Generation Output
  - Power flow, transient stability, voltage stability
  - Starting Case: 2014 CCPG Compliance Study
  - CLFP System Demand = 184 MW
  - Warren AFB Demand = 7.4

- **2025 Heavy Summer Load**
  - Power flow (transient stability as needed)
  - Starting Case: 2014 DEEP Study
  - CLFP System Demand = 231 MW
  - Warren AFB Demand = 14.4 MW

Requesting Scenarios and Alternatives

- Use CCPG Request Form at any time
- Ensures all stakeholder suggestions are considered
- Form will be submitted to CCPG and directed to the appropriate group
- All requests will be acknowledged and responded to
- www.westconnect.com/filestorage/ccpg_request_form.xls

Next Meetings

- Q3 Meeting: August 21, 2014 9:30-11:00 a.m.
  - Review stakeholder comments following Q2 meeting, study results, identified solutions and alternatives, planned project status, other regional planning updates

- Q4 Meeting: November 20, 2014 9:30-11:00 a.m.
  - Review final comments to draft LTP report, preferred project alternatives, planned project status, other regional planning updates

- Additional stakeholder discussions may be held as necessary

Questions?

Wes Wingen, PE
Manager of Transmission Planning
wes.wingen@blackhillscorp.com
(605) 721-2268

Dan Baye
Transmission Planning Engineer
daniel.baye@blackhillscorp.com
(605) 721-2471

List of Acronyms

- CCPG = Colorado Coordinated Planning Group
- CPCN= Certificate of Public Convenience and Necessity
- FERC = Federal Energy Regulatory Commission
- KV = Kilovolt (1,000 volts)
- LTP = Local Transmission Plan
- MW = Megawatts (millions of watts)
- NERC = North American Electric Regulatory Corporation
- OASIS = Open Access Same-time Information System
- POD = Point of Delivery
- TCPC = Transmission Coordination & Planning Committee
- WECC = Western Electricity Coordinating Council